SUBARU®

LIBERTY

1992 SERVICE MANUAL

SECTION 4

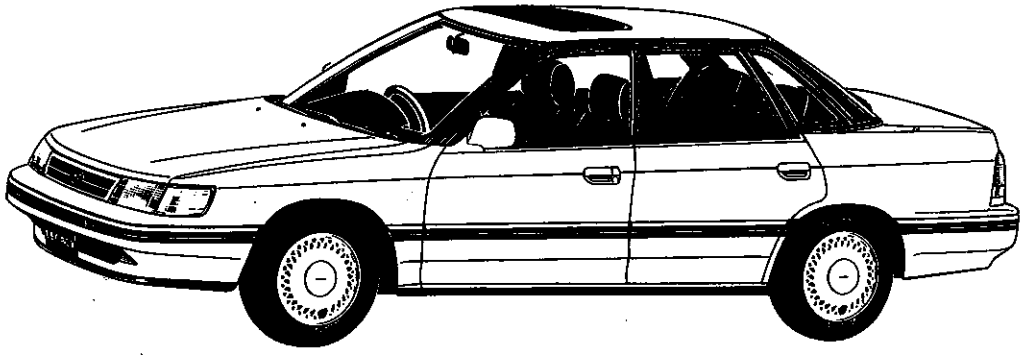

629.
28722
SUBA
v.4

FUJI HEAVY INDUSTRIES LTD.

246549 GLENDALE

SUBARU®

1992

SERVICE MANUAL

FOREWORD

This service manual has been prepared to provide SUBARU service personnel with the necessary information and data for the correct maintenance and repair of SUBARU vehicle.
This manual include the procedures for maintenance disassembling, reassembling, inspection and adjustment of components and troubleshooting for guidance of both the fully qualified and the less-experienced mechanics.
Please peruse and utilize this manual fully to ensure complete repair work for satisfying our customers by keeping their vehicle in optimum condition. When replacement of parts during repair work is needed, be sure to use SUBARU genuine parts.
All information, illustration and specifications contained in this manual are based on the latest product information available at the time of publication approval.

FUJI HEAVY INDUSTRIES LTD.

All right reserved. This book may not be reproduced or copied, in whole or in part, without the written permission of
FUJI HEAVY INDUSTRIES LTD., TOKYO JAPAN.

SUBARU, and are trademarks of
FUJI HEAVY INDUSTRIES LTD.

© Copyright 1991 FUJI HEAVY INDUSTRIES LTD.

QUICK REFERENCE INDEX

4 MECHANICAL COMPONENTS SECTION

SUSPENSION 4–1
WHEELS AND AXLES 4–2
STEERING SYSTEM 4–3
BRAKES 4–4
PEDAL SYSTEM AND CONTROL CABLES 4–5
HEATER AND VENTILATOR 4–6
★ ★ ★ ★ ★ ★ ★ ★ ★ ★ ★ ★ ★ ★ ★ ★ 4–7

NSW TAFE LIBRARY NETWORK
3 5555 05468449 5
GLENDALE LIBRARY COLLEGE of T.A.F.E.

IMPORTANT SAFETY NOTICE

Providing appropriate service and repair is a matter of great importance in the serviceman's safety maintenance and safe operation, function and performance which the SUBARU vehicle possesses.

In case the replacement of parts or replenishment of consumables is required, genuine SUBARU parts whose parts numbers are designated or their equivalents must be utilized.

It must be made well known that the safety of the serviceman and the safe operation of the vehicle would be jeopardized if he used any service parts, consumables, special tools and work procedure manuals which are not approved or designated by SUBARU.

How to use this manual

- This Service Manual is divided into six volumes by section so that it can be used with ease at work. Refer to the Table of Contents, select and use the necessary section.

- Each chapter in the manual is basically made of the following five types of areas.

  M : Mechanism and function
  S : Specifications and service data
  C : Component parts
  W : Service procedure
  (X : Service procedure)
  (Y : Service procedure)
  T : Troubleshooting

- The description of each area is provided with four types of titles different in size as shown below. The Title No. or Symbol prefixes each title in order that the construction of the article and the flow of explanation can be easily understood.

  [Example of each title]
  - Area title: W. Service procedure (one of the five types of areas)
  - Large title (Heading): 1. Oil Pump (to denote the main item of explanation)
  - Medium title (Section): A. REMOVAL (to denote the type of work in principle)
  - Small title (Sub-section): 1. INNER ROTATOR (to denote a derivative item of explanation)

- The Title Index No. is indicated on the top left (or right) side of the page as the book is opened. This is useful for retrieving the necessary portion.

(Example of usage)

Refer to 2 - 4 [W 1 B 1]

- Small title (Sub-section)
- Medium title (Section)
- Large title (Heading)
- Area title
- Chapter No.

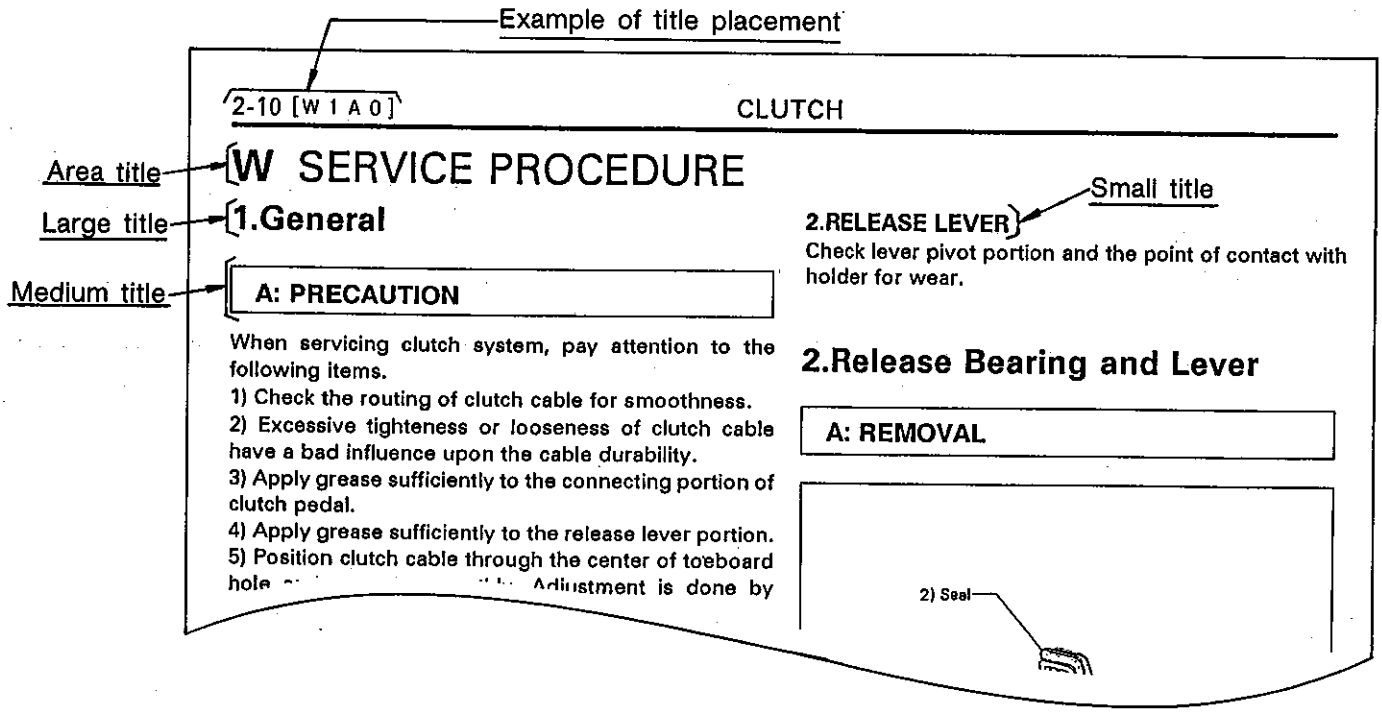

- In this manual, the following symbols are used.

: Should be lubricated with oil.

: Should be lubricated with grease.

: Sealing point

T : Tightening torque

TABLE OF CONTENTS

1 GENERAL SECTION	1-1	Specifications
	1-2	★★★★★★★★★★★★
	1-3	General Information
	1-4	Pre-Delivery Inspection
	1-5	Periodic Maintenance Services
	1-6	Special Tools
2 ENGINE SECTION	2-1	Emission Control System and Vacuum Fitting
	2-2	On-Car Services
	2-3a	Engine (SOHC)
	2-3b	Engine (DOHC)
	2-4	Engine Lubrication System
	2-5	Engine Cooling System
	2-6	Carburetor
	2-7a	Fuel Injection System (MPFI Non-TURBO)
	2-7b	Fuel Injection System (SPFI)
	2-7c	Fuel Injection System (MPFI TURBO)
	2-8	Fuel System
	2-9	Exhaust System
	2-10	Clutch
	2-11	Engine and Transmission Mounting System
3 TRANSMISSION AND DIFFERENTIAL SECTION	3-1	Manual Transmission and Differential
	3-2a	Automatic Transmission and Differential (4AT)
	3-2b	★★★★★★★★★★★★
	3-3	Transmission Control System
	3-4	4WD System
4 MECHANICAL COMPONENTS SECTION	4-1	Suspension
	4-2	Wheels and Axles
	4-3	Steering System
	4-4	Brakes
	4-5	Pedal System and Control Cables
	4-6	Heater and Ventilator
	4-7	★★★★★★★★★★★★
5 BODY SECTION	5-1	Body and Exterior
	5-2	Doors and Windows
	5-3	Seats, Seat Belts, and Interior
	5-4	Instrument Panel
6 ELECTRICAL SECTION	6-1	Engine Electrical System
	6-2	Body Electrical System
	6-3	Wiring Diagram and Trouble-shooting

SUBARU®

1992

SERVICE MANUAL

	Page
M MECHANISM AND FUNCTION	2
1. Front Suspension	2
2. Rear Suspension	3
3. Air (Pneumatic) Suspension with Height Control	4
S SPECIFICATIONS AND SERVICE DATA	13
C COMPONENT PARTS	15
1. Conventional Suspension	15
2. Air (Pneumatic) Suspension	18
W SERVICE PROCEDURE FOR CONVENTIONAL SUSPENSION	20
1. On-car Services	20
2. Front Transverse Link Assembly	27
3. Front Ball Joint	29
4. Front Strut Assembly	31
5. Front Stabilizer	35
6. Front Crossmember	36
7. Rear Trailing Link Assembly	38
8. Lateral Link Assembly	41
9. Rear Strut Assembly	45
10. Rear Crossmember (FWD)	48
11. Rear Crossmember (4WD)	49
*X SERVICE PROCEDURE FOR AIR (PNEUMATIC) SUSPENSION WITH HEIGHT CONTROL	53
1. General Precautions	53
2. Front Air Suspension Strut Assembly	53
3. Rear Air Suspension Strut Assembly	56
4. Compressor & Drier Assembly	57
5. Air Tank Assembly	58
6. Front Suction and Discharge Solenoid Valve	59
7. Rear Suction and Discharge Solenoid Valve	60
T TROUBLESHOOTING	61
1. Conventional Suspension	61
2. Troubleshooting for Air Suspension	62
3. Air Suspension Control Unit I/O Signal	65
4. Diagram of Air Suspension System	68
5. Troubleshooting Chart with Trouble Code	70
6. Troubleshooting with Select Monitor	84
7. General Troubleshooting Table for Air Suspension	88

*** In this topic are described the different points of the air (pneumatic) suspension from the explanations described in the above topic. Accordingly, use this topic together with the above topic.**

M MECHANISM AND FUNCTION

1. Front Suspension

A: OUTLINE

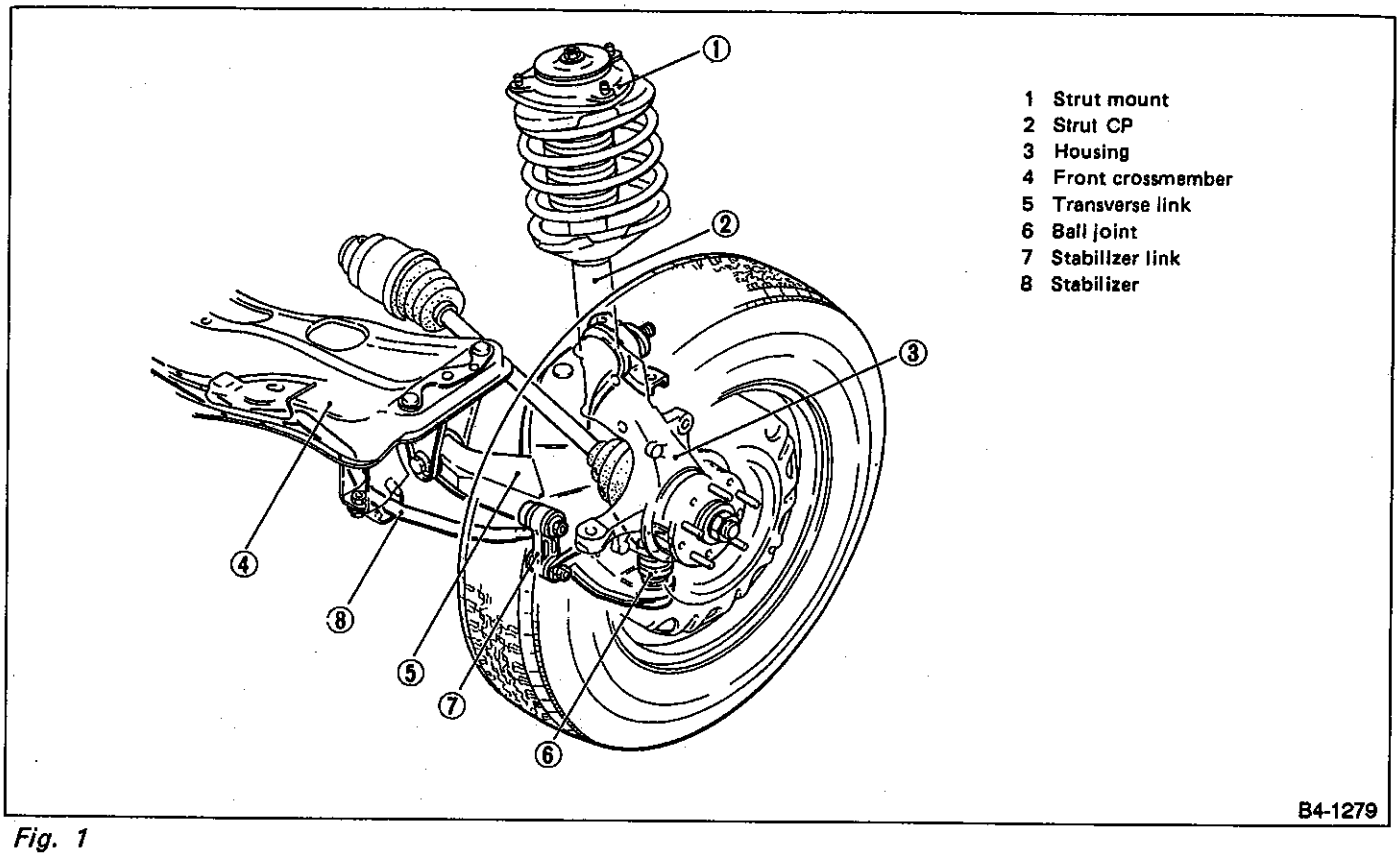

Fig. 1

The front suspension is a strut-type independent suspension, with cylindrical double-acting oil damper and coil spring [or air spring for air (pneumatic) suspension].
The top of the oil damper is mounted on the body through the cushion rubber, which has resulted in elimination of any vibration by combined use of other rubbers to improve passenger comfort. This type also maintains a wide distance between the upper and lower supporting points and makes adjustment of the caster unnecessary.

The transverse link utilizes an "L" arm design to increase steering stability and reduce road noise. The transverse link has a maintenance free ball joint with a nut fitting at the outer end, and the inner end front side fitted to the front crossmember through the cushion rubber. The rear side of the inner end is bolted to the vehicle body through a fluid-filled bushing.
The front crossmember is bolted to the vehicle body.

The stabilizer is attached to the front crossmember through the cushion rubbers and its ends are connected to the stabilizer links through the rubber bushings.
The lower end of the stabilizer link is connected to the transverse link through rubber bushings.
A camber angle adjustment mechanism, which uses eccentric bolts, is provided at the joint of the damper strut and housing.

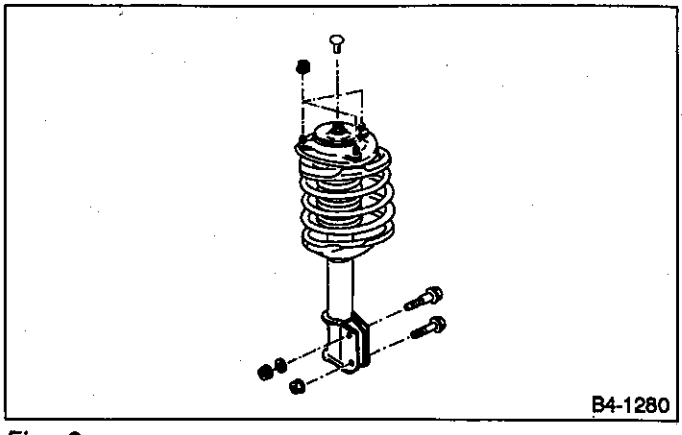

Fig. 2

2. Rear Suspension

A: OUTLINE

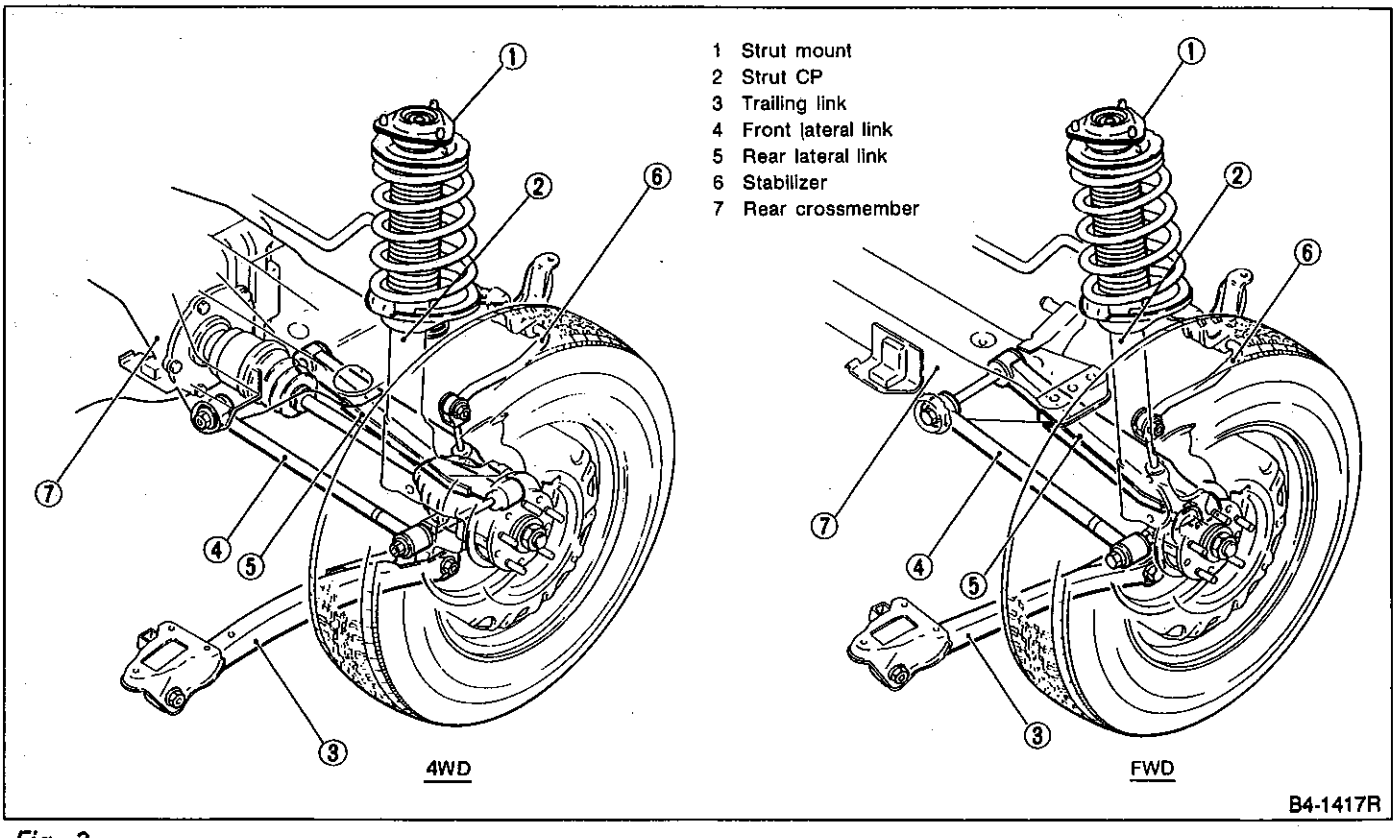

Fig. 3

The rear suspension is an independent, dual link strut type. It consists of two parallel lateral links, a trailing link which moves back and forth, and shock absorber ASSY's. The shock absorber assembly is joined with a cylindrical double- acting oil damper and coil spring [or air spring for the air suspension].
The respective component parts of this suspension are optimally designed to act in response to vertical, lateral and transverse loads transmitted from the tires. Thus, riding comfort and steering stability are substantially enhanced.

- Transverse loads act on the trailing link.
- Vertical loads act on the coil spring, rear strut and rear rubber mount (which is located on the strut).
- Lateral loads act on the two lateral links.

The crossmember is installed on the body frame via bushings.
The stabilizer that extends to the rear of the crossmember, is installed on the body frame using a bracket and to the rear lateral link on the wheel side.

3. Air (Pneumatic) Suspension with Height Control

A: OUTLINE

Ground clearance (vehicle height) can be controlled by operation of the height control switch. There are two levels of ground clearance which can be selected, i.e. "Normal" and "High". The difference of height between High and Normal is 40 mm (1.57 in) for the front and 40 mm (1.57 in) for the rear of the vehicle.
This system also maintains constant ground clearance regardless of vehicle load. For this purpose air volume in each air spring is adjusted according to a signal from a vehicle height sensor which is installed in each air spring.

B: FEATURES

The air spring with height control (ground clearance maintaining and switching device) adopted on the 4WD AT vehicle provides good riding comfort and stabilized driving even on rough roads.
1) The air spring is adopted in place of the conventional metal spring to improve riding comfort.
2) A constant wheel stroke is available irrespective of the load, and this results in reduced bumping shock on irregular road surfaces.
3) The variable damping force mechanism built into the air spring keeps the damping force low to assure good riding comfort while the wheel stroke is small. When the wheel stroke increases, the damping force is increased to improve driveability on rough surfaces. As vehicle level increases, damping force automatically increases so that the vehicle's posture is stabilized.
4) The vehicle posture can always be maintained constant, so that the light axis of the headlight will be maintained constant.
5) If the vehicle speed exceeds approximately 80 km/h (50 MPH) while driving in the "high (ground clearance)" position, the ground clearance is automatically lowered to the "normal" position.
If the vehicle speed drops below approximately 50 km/h (30 MPH), the ground clearance is automatically reset to the "high" position. This system assures stability during high speeds and improves fuel economy.

C: OPERATION

1. GROUND CLEARANCE "CONSTANT"

When the ground clearance becomes smaller than the preset level, due to an increase in load, the vehicle height sensor built into each rolling diaphragm type air spring issues a "low" signal. If this condition lasts for a certain period of time, the control unit judges that the ground clearance is low, and opens the solenoid valve to send compressed air to the air spring from the air tank (← arrow mark). As the ground clearance increases, the "low" signal from the sensor disappears, and the control unit closes the solenoid valve. The ground clearance is thus always held at a constant level. If the pressure in the air tank drops, the tank pressure switch operates the compressor until the pressure returns to the specified level.
If the ground clearance becomes larger than the preset level, due to a load reduction, the sensor issues a "high" signal, and opens the solenoid valve of the respective air spring to allow air to be released from the air spring (← arrow mark). As the ground clearance lowers, the "high" signal from the sensor disappears, and the control unit closes the solenoid valve.
If the vehicle is driven over approximately 80 km/h (50 MPH) during a "high" ground clearance state, a signal is sent from the speedometer to the control unit, and the ground clearance is set automatically to the "normal" position. If the speed drops below approximately 50 km/h (30 MPH), the vehicle automatically reverts to the "high" ground clearance mode.

WARNING:

- **Do not jack up vehicle with pneumatic suspension or raise it on hoist when ignition switch is "ON" or within one minute after it is turned "OFF". Failure to follow this warning may cause vehicle height to abruptly change due to height control function, which in turn could cause personal injury or damage to vehicle body.**
- **Do not turn ignition switch "ON" while tilting vehicle on jack or hoist. If ignition switch needs to be turned "ON" with vehicle tilted, remove pneumatic suspension fuse from fuse box first. Otherwise, vehicle height may abruptly change, causing personal injury or damage to vehicle body. After turning ignition switch "OFF" with fuse removed, disconnect battery ground terminal. Wait at least one second and re-connect ground terminal.**

2. GROUND CLEARANCE CHANGEOVER

If the height control switch is operated while driving below approximately 80 km/h (50 MPH), the ground clearance is switched from "normal" to "high", or from "high" to "normal".

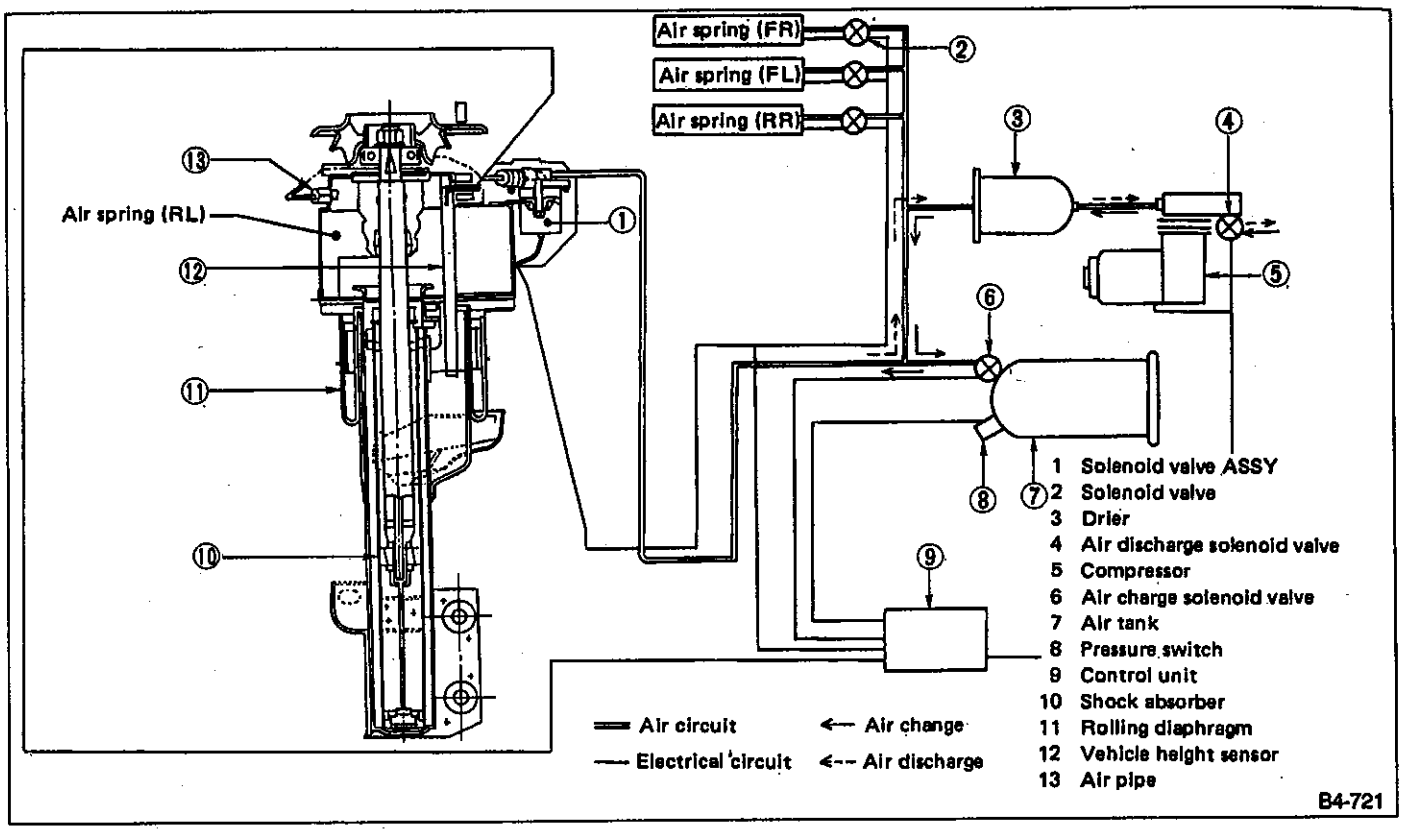

Fig. 4

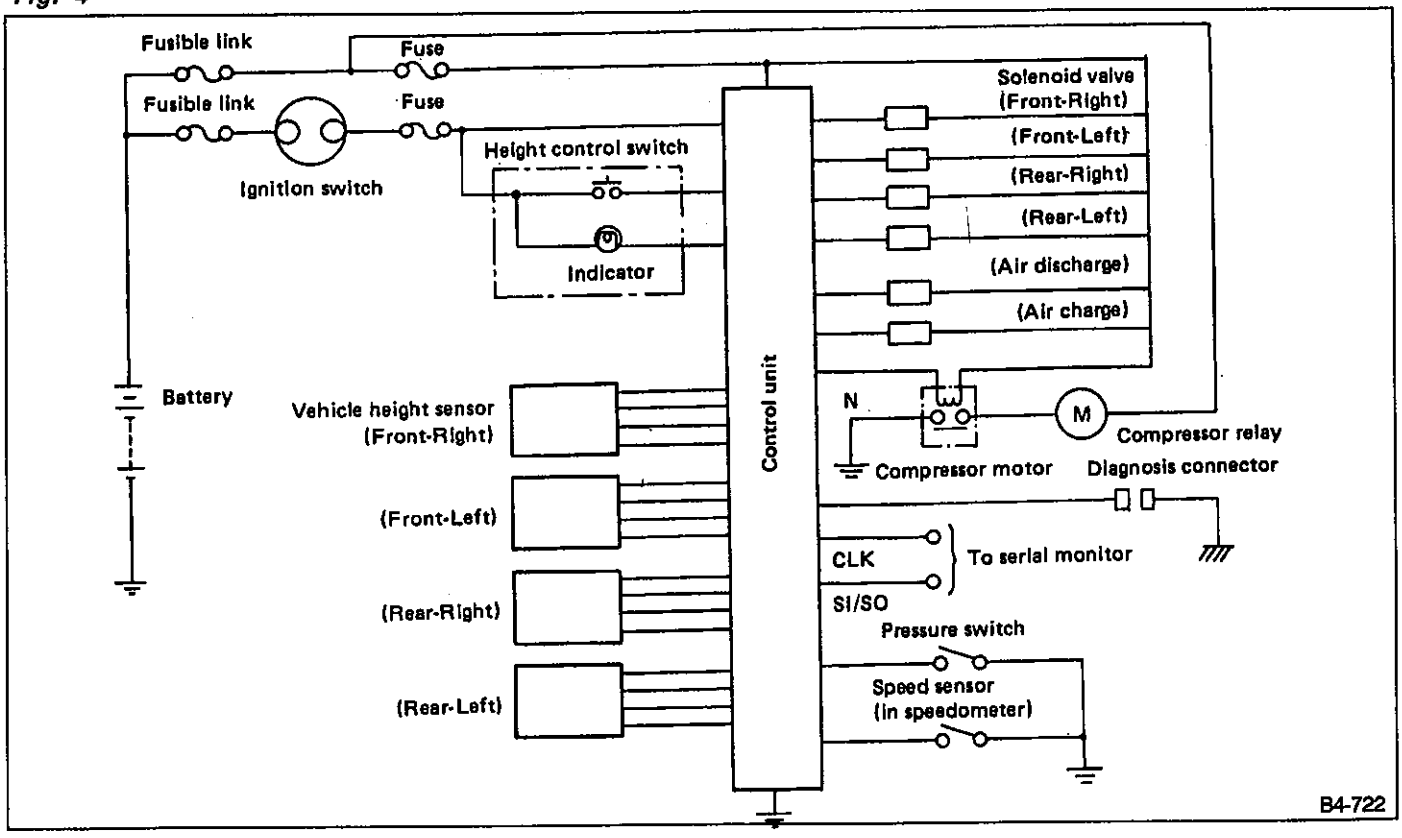

Fig. 5 Electrical circuit

D: CONSTRUCTION

1. GENERAL

The air suspension system consists of the following:

- Selector switch by which the ground clearance of the vehicle can be varied in two steps.
- A warning indicator which indicates the current height of the vehicle and also illuminates in case of trouble.
- Four vehicle height sensors (each built into its respective air spring) which detect proper vehicle height for each wheel.
- Six solenoid valves.
- A control unit which opens and closes the solenoid valves in the proper order by measuring the signals from the vehicle height sensors.
- An air tank and an electric compressor which is operated by the pressure switch.
- A drier and air piping.

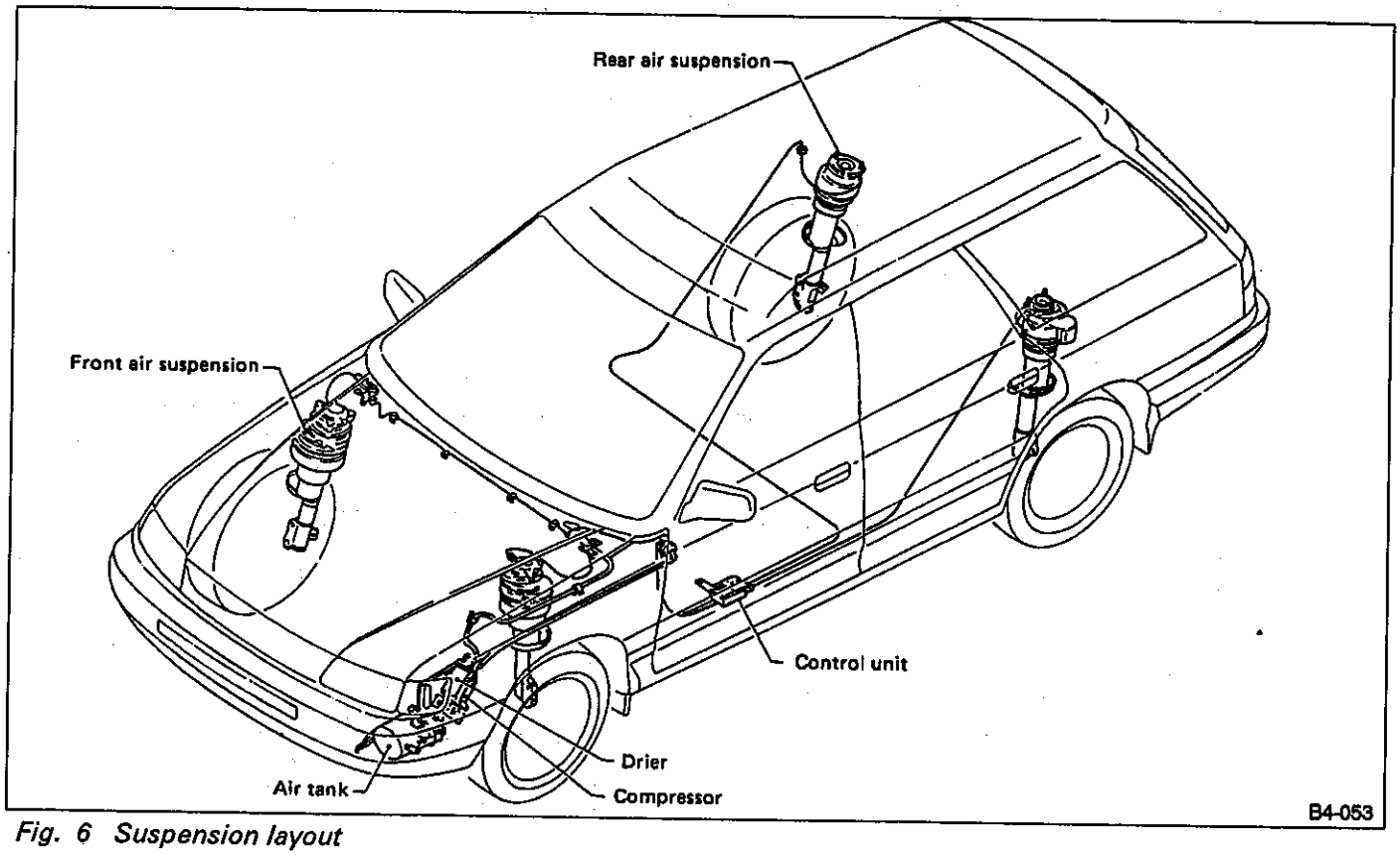

Fig. 6 Suspension layout

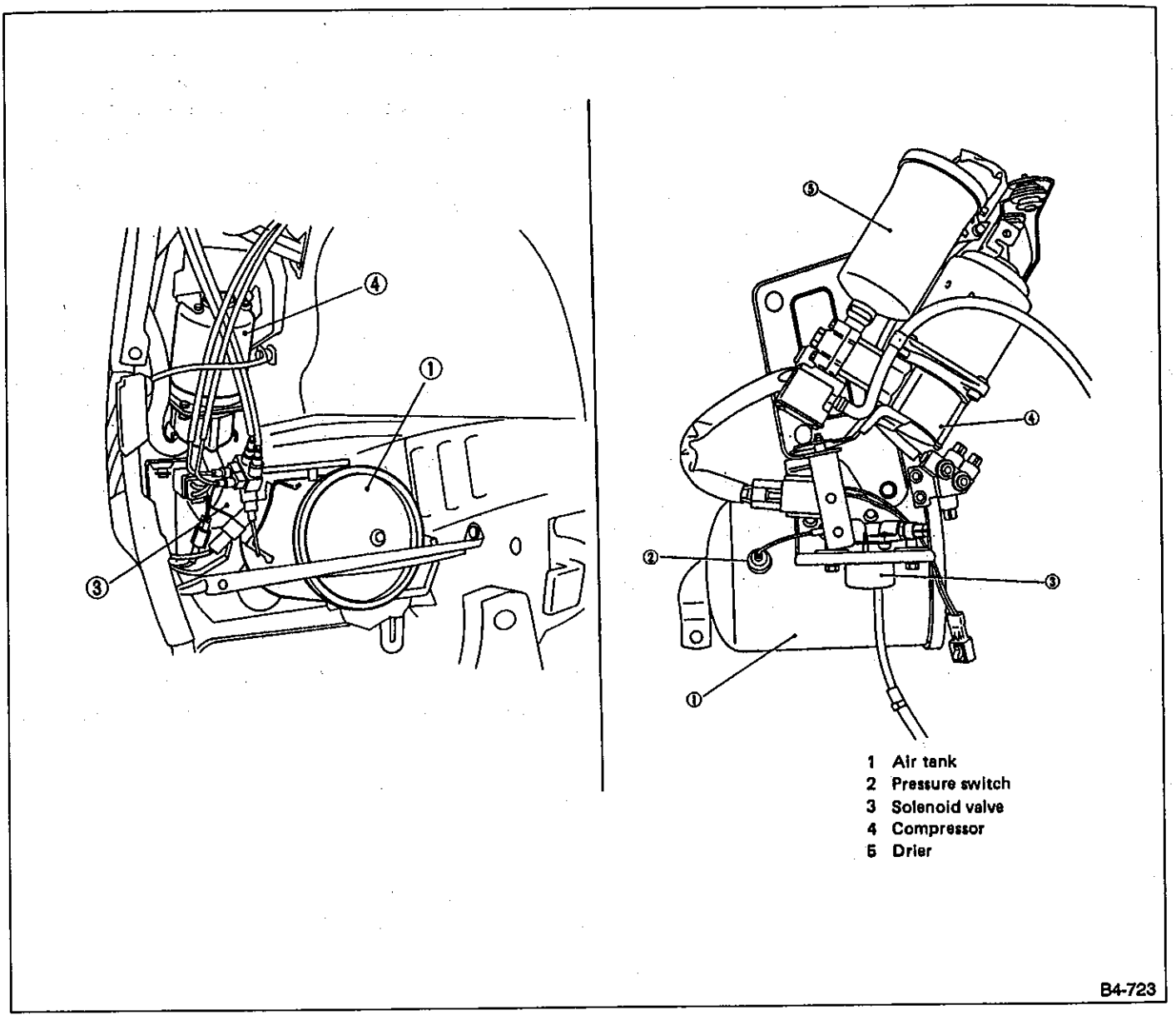

Fig. 7 Air tank, compressor and drier

2. VEHICLE HEIGHT SELECTOR SWITCH AND INDICATOR

When the height control switch is pushed in, the vehicle's posture is set to the high position. While adjusting vehicle height from Normal to High, the vehicle height indicator blinks slowly. Upon completion of this operation, the indicator turns on.
In case of trouble, vehicle height indicator illuminates.

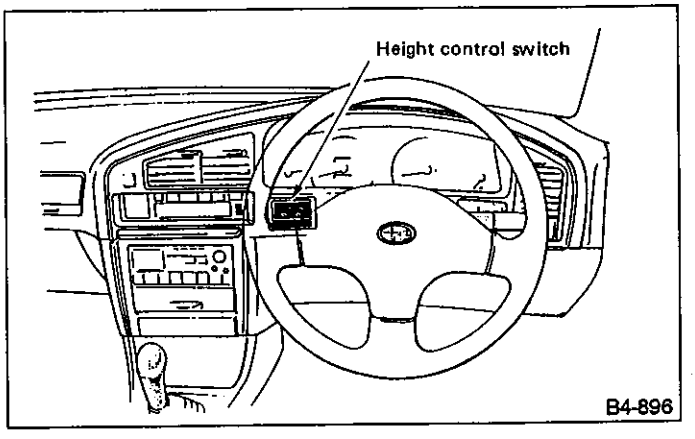

Fig. 8

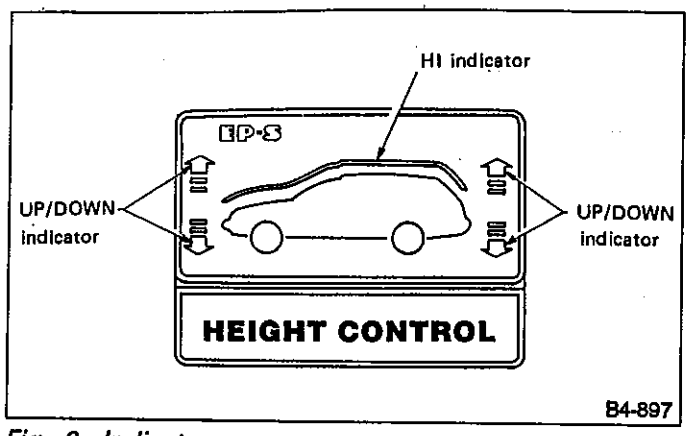

Fig. 9 Indicator

3. VEHICLE HEIGHT SENSOR

The vehicle height sensor consists of a reed switch and magnet. The reed switch is fixed on the body side part of the air suspension ASSY and the magnet is fixed underneath the air spring.
The height signal is generated according to the relation between the positions of reed switch and magnet.

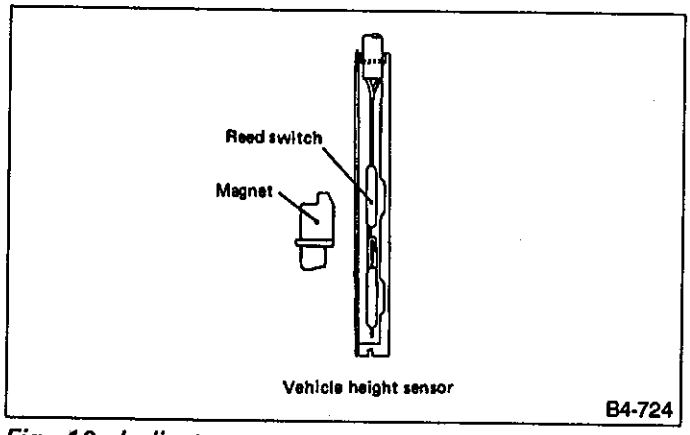

Fig. 10 Indicator

4. CONTROL UNIT

The control unit receives signals from the vehicle height sensors and others, and controls the solenoid valve of each air suspension as well as the compressor. The microcomputer adopted in this control unit permits each wheel to be controlled independently so as to obtain the optimum performance according to the loaded condition of the vehicle.

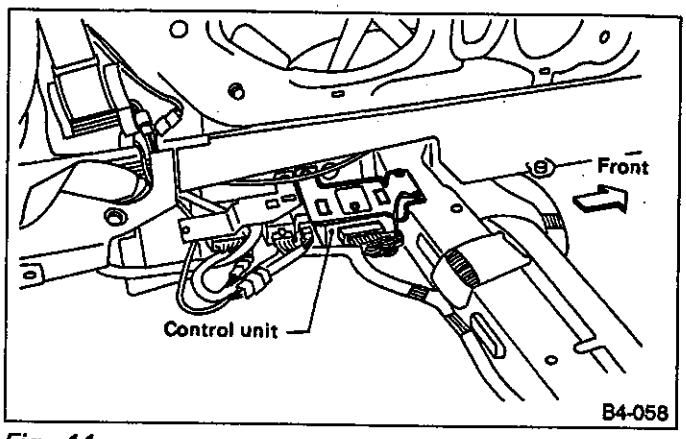

Fig. 11

5. SOLENOID VALVE (CONTROL VALVE)

This valve is operated according to a signal from the control unit when air is charged or discharged to the air suspension.

The shape of bracket differs according to the installation position.

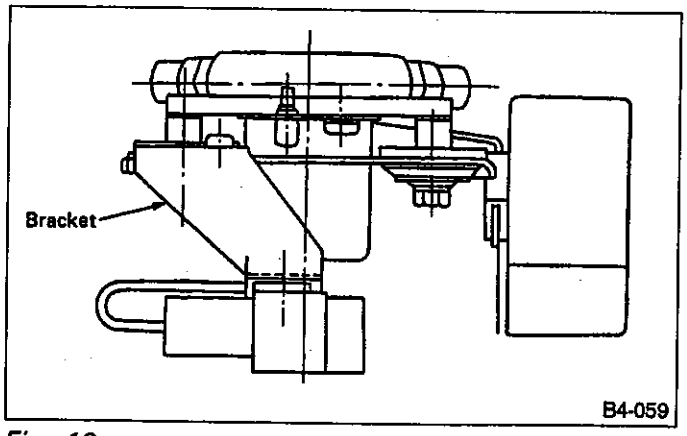

Fig. 12

6. DRIER

The drier dries air which flows through it to the air tank or each air spring, with silica gel, in order to prevent freezing of water in the air pipe. The silica gel is refreshed by dry air during air discharge.
A residual pressure valve is provided so that the diaphragm can always be held in the expanded state, hence a residual pressure of 98 kPa (1 kg/cm^2, 14 psi) remains in the air chamber even after air discharge operation is completed.

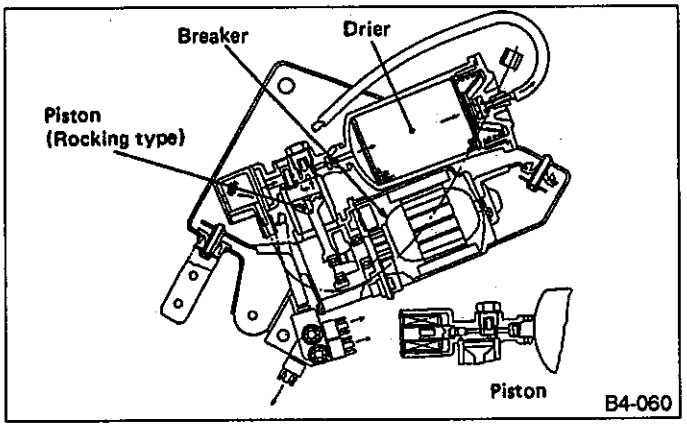

Fig. 13

7. AIR TANK

Pressure switch and solenoid valve for air charge are incorporated in the air tank. The tank is filled with compressed air of 755 to 941 kPa (7.7 to 9.6 kg/cm^2, 109 to 137 psi).
The air tank contains air [2,500 cm^3 (2,500 cc, 152.55 cu in)] to raise the vehicle or maintain it at a constant level under various loads by shifting the pressure switch from the "normal" to the "high" position.

8. PRESSURE SWITCH

If the pressure in the air tank rises, the pressure sensitive disc pushes the guide pin up to open the moving contact, and the switch is opened. When the pressure drops, the switch is closed.

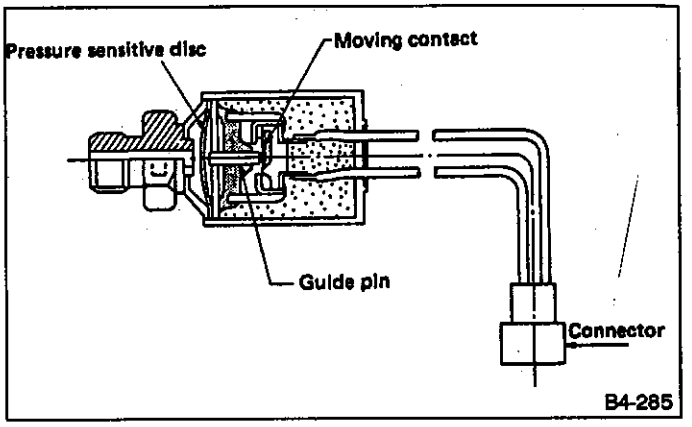

Fig. 14

9. FRONT AND REAR AIR SUSPENSION ASSEMBLIES

Both air suspension ASSY's adopt air springs in place of the conventional metal springs.
The air spring consists of an upper and lower air chamber housing and a rolling diaphragm. Changes in the relative position of the upper and lower housings are effectively absorbed by diaphragm deflection. The air volume in the air chamber and a rolling diaphragm change in response to a change in the relative position of both housings. In this way, spring action occurs with the change in air volume.

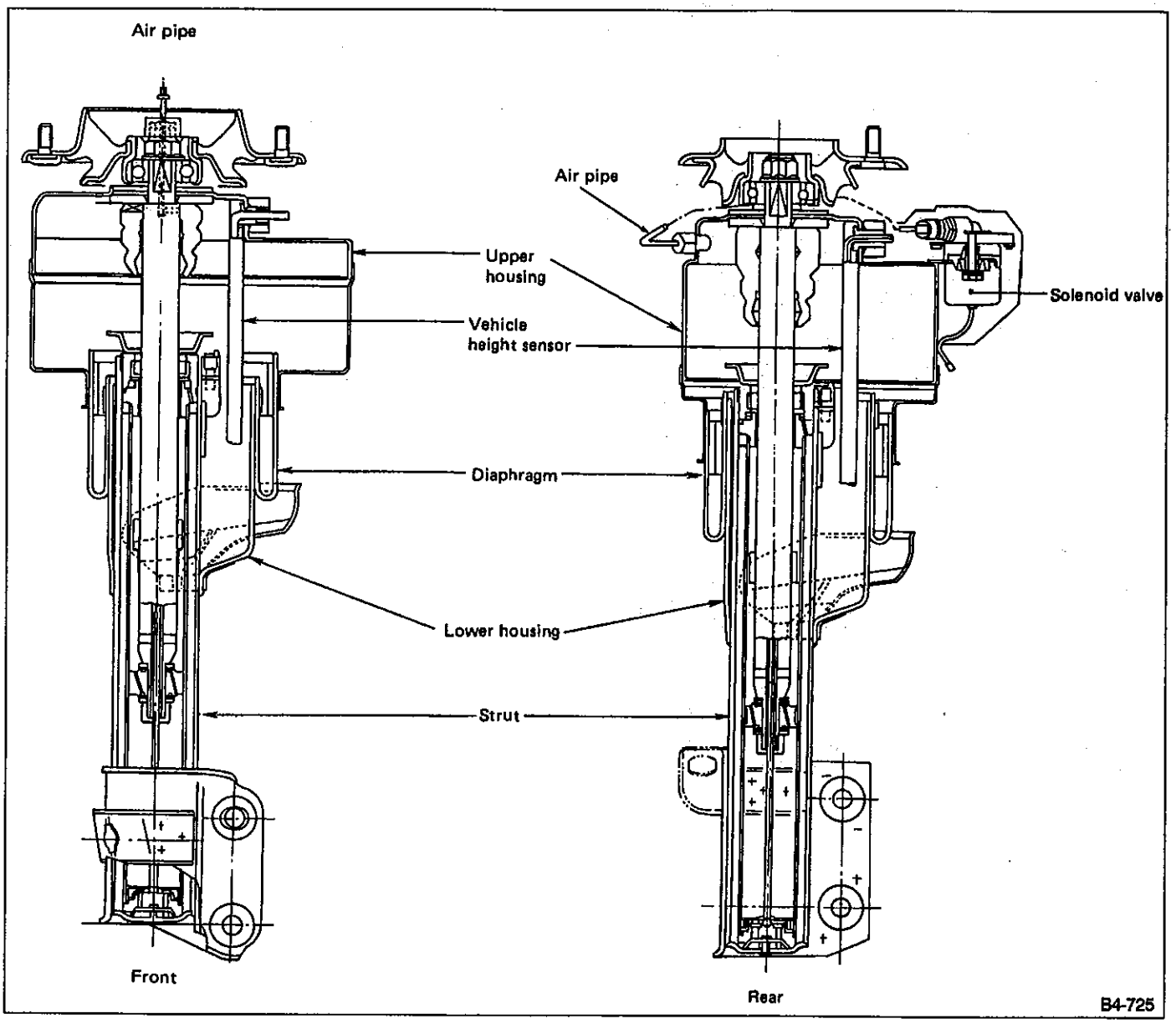

Fig. 15

10. AIR PIPE

The air pipe is made of nylon, and the joint at the front strut is composed of a cap, air bushing, and O-ring. The air pipe is secured by tightening the cap to the specified torque to crush the end of the air bushing.

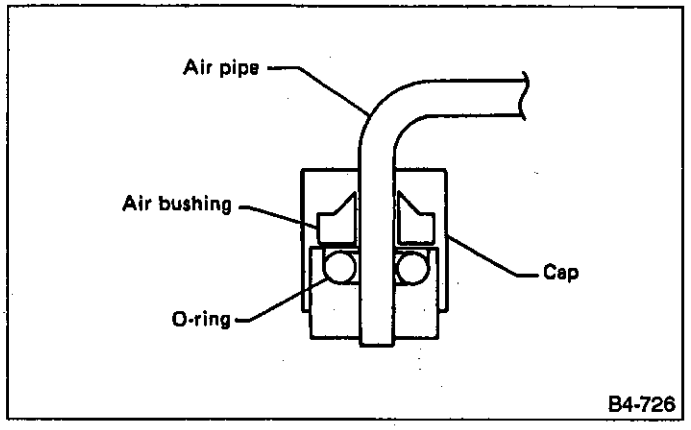

Fig. 16

All other joints adopt a quick joint whose construction is shown below.

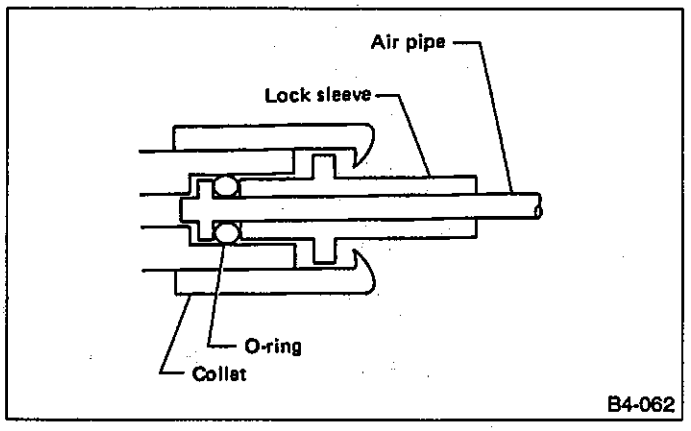

Fig. 17

E: VARIABLE DAMPING FORCE MECHANISM

1. FEATURES

This mechanism produces an optimum damping force corresponding to the road surface and driving conditions in relation to the wheel stroke and vehicle height.

- Excellent riding comfort is assured when driving on general paved surface, since the damping force is kept low when the wheel stroke is small.
- High vehicle level stability is achieved since the damping force increases as the wheel stroke increases.
- The higher the vehicle level, the greater the damping force. This results in vehicle stability during rough road conditions.

2. CONSTRUCTION AND OPERATION

A metering pin is set up at the center of the bottom of the damper, which slides in a bore drilled in the axis of the piston rod.

A in the Figure indicates the condition where a hard damping force is being generated. Based on the same principle as the conventional gas-charged damper, the damping force is generated by the orifice in the piston and the disc valves provided both over and under the piston.

B in the Figure shows the condition where a soft damping force is being generated. During this condition, the clearance produced between the thin diameter portion of the metering pin and the rod, also serves as an oil passage (flow route marked *), hence the damping force is smaller than that generated in condition A.

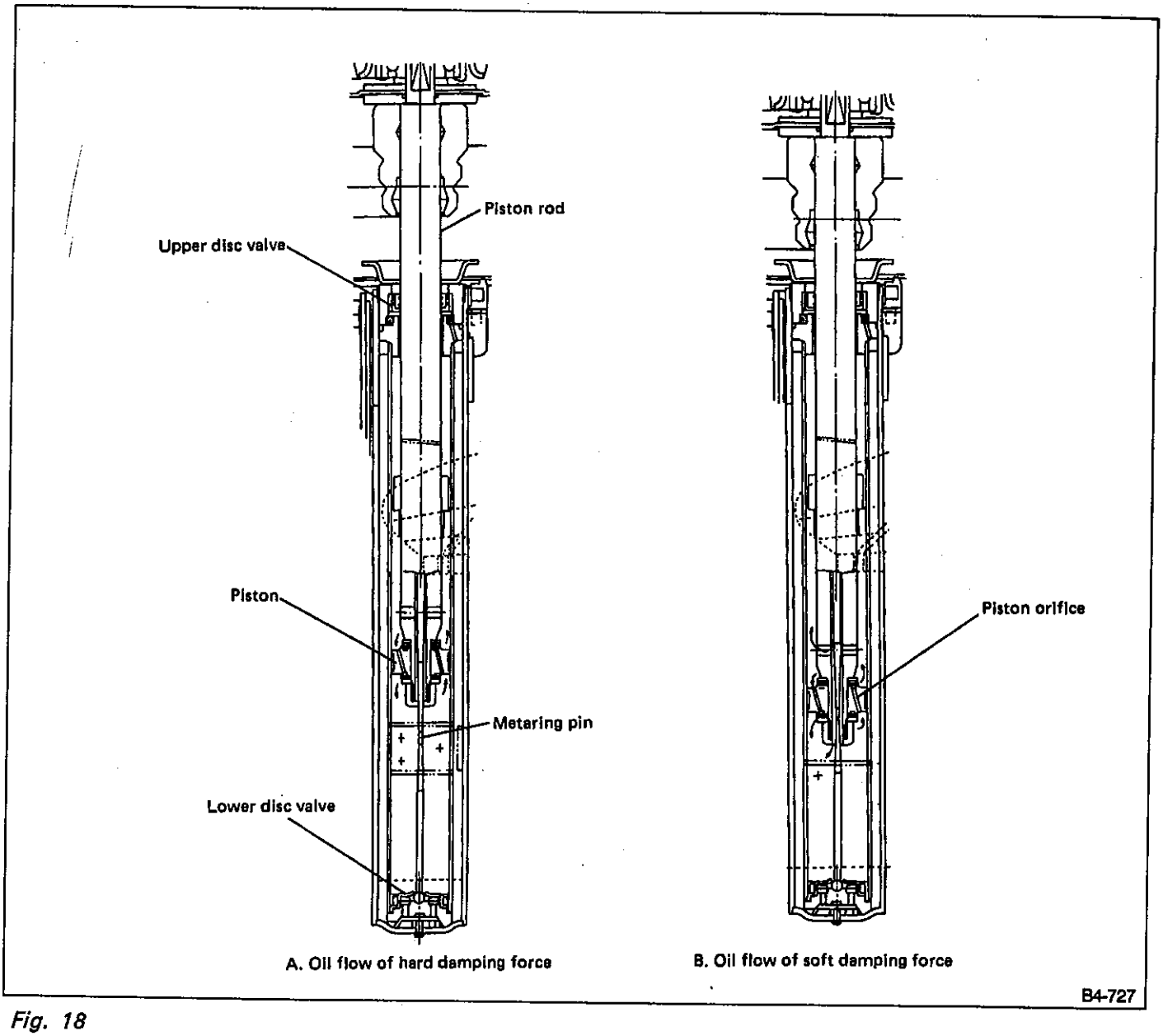

Fig. 18

S SPECIFICATIONS AND SERVICE DATA

A: SPECIFICATIONS

1. CONVENTIONAL SUSPENSION

1. Stabilizer

			Bar dia. mm (in)	
			Front	Rear
4-DOOR SEDAN	FWD	1600 cc	17 (0.67)	—
		1800 cc	17 (0.67)	—
		2000 cc	17 (0.67)	—
		2200 cc	18 (0.71)	14 (0.55)
	4WD	1800 cc	17 (0.67)	—
		2000 cc	17 (0.67)	—
		TURBO	18 (0.71)	18 (0.71)
		2200 cc	18 (0.71)	14 (0.55)
STATION WAGON	FWD	1600 cc	18 (0.71)	—
		1800 cc	18 (0.71)	—
		2000 cc	18 (0.71)	—
		2200 cc	19 (0.75)	14 (0.55)
	4WD	1800 cc	18 (0.71)	—
		2000 cc	18 (0.71)	—
TOURING WAGON	FWD	1600 cc	18 (0.71)	—
		2200 cc	19 (0.75)	14 (0.55)
	4WD	1800 cc	19 (0.75)	—
		2000 cc	19 (0.75)	—
		TURBO	18 (0.71)	16 (0.63)
		2200 cc	19 (0.75)	14 (0.55)

2. AIR (PNEUMATIC) SUSPENSION

2-1 Stabilizer

Bar dia. mm (in)	Front	19 (0.75)
	Rear	18 (0.71)

2-2 Air suspension

	Max. length mm (in)	Min. length mm (in)	Stroke mm (in)	Damping force [at a piston speed of 0.3 m (1 ft) / sec.] N (kg, lb)	
				Expansion (normal / high)	Compression (normal / high)
Front	508 (20.00)	382 (15.04)	126 (4.96)	628 /1,079 (64 / 110, 141 / 243)	275 / 392 (28 / 40, 62 / 88)
Rear	600 (23.62)	439 (17.28)	162 (6.38)	490 / 883 (50 / 90, 110 / 198)	294 / 392 (30 / 40, 66 / 88)

B: WHEEL ALIGNMENT

		Sedan			Wagon			
		FWD	4WD	TURBO	FWD	4WD	TURBO	Air suspension vehicle 4WD
Front	Camber (common difference: ± 0°30′)	— 0°15′	0°	— 0°15′	— 0°15′	0°	— 0°15′	0°
	Caster (common difference: ± 1°)	3°05′	3°	2°50′	2°50′	2°45′	2°50′	3°
	Toe mm (in)	0 ± 3 (0 ± 0.12) Toe-in angle: — 0°09′ [when toe-in is — 3 (— 0.12)] Toe-out angle: 0°09′ [when toe-out is 3 (0.12)]						
	Kingpin angle	14°20′	14°05′	14°20′	14°20′	14°05′	14°20′	14°05′
	Wheel arch height [common difference: ± 10 mm (± 0.39 in)] mm (in)	378 (14.88) *388 (15.28)	388 (15.28)	378 (14.88)	378 (14.88)	388 (15.28)	378 (14.88)	388 (15.28)
Rear	Camber (common difference: ± 0°45′)	— 1°	— 1°	— 1°	— 0°50′	— 0°50′	— 1°	— 1°
	Toe mm (in)	0 ± 3 (0 ± 0.12) Toe-in angle: — 0°09′ [when toe-in is — 3 (— 0.12)] Toe-out angle: 0°09′ [when toe-out is 3 (0.12)]						
	Wheel arch height [common difference: ± 10 mm (± 0.39 in)] mm (in)	359 (14.13) *388 (15.28)	369 (14.53)	364 (14.33)	369 (14.53)	379 (14.92)	364 (14.33)	369 (14.53)

*: 2200 cc model

If the inspection data is out of "SERVICE LIMIT", readjust.

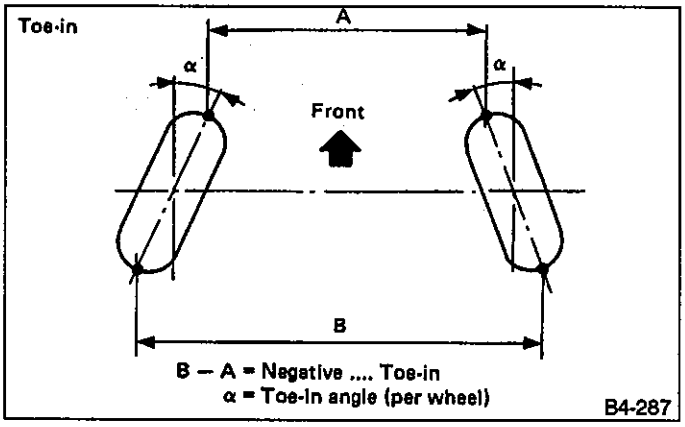

Fig. 19

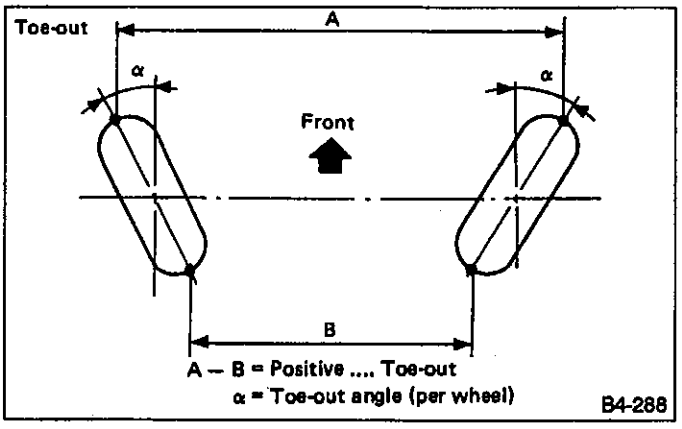

Fig. 20

C: SERVICE DATA

1. CONVENTIONAL SUSPENSION

Strut	Piston rod deflection Limit	0.8 mm (0.031 in)/ 20 N (2 kg, 4 lb)

2. AIR (PNEUMATIC) SUSPENSION

Recommended grease Recommended O-ring	NOK SEALUB S-4 NOK material; P8A980

C COMPONENT PARTS

1. Conventional Suspension

1. FRONT

Tightening torque: N·m (kg-m, ft-lb)
T1: 14 – 25 (1.4 – 2.6, 10 – 19)
T2: 49 – 59 (5 – 6, 36 – 43)
T3: 132 – 172 (13.5 – 17.5, 98 – 127)
T4: 21 – 28 (2.1 – 2.9, 15 – 21)
T5: 23 – 42 (2.3 – 4.3, 17 – 31)
T6: 38 – 50 (3.9 – 5.1, 28 – 37)
T7: 25 – 34 (2.5 – 3.5, 18 – 25)
T8: 83 – 113 (8.5 – 11.5, 61 – 83)
T9: 196 – 294 (20 – 30, 145 – 217)
T10: 39 (4.0, 29)

1 Dust seal
2 Strut mount
3 Spacer
4 Upper spring seat
5 Rubber seat
6 Dust cover
7 Helper
8 Coil spring
9 Damper strut
10 Crossmember CP
11 Cotter pin
12 Front stabilizer
13 Jack-up plate
14 Bolt CP
15 Bushing
16 Clamp
17 Washer
18 Stabilizer link
19 Castle nut
20 Ball joint
21 Front bushing
22 Rear bushing
23 Washer
24 Self lock nut
25 Transverse link

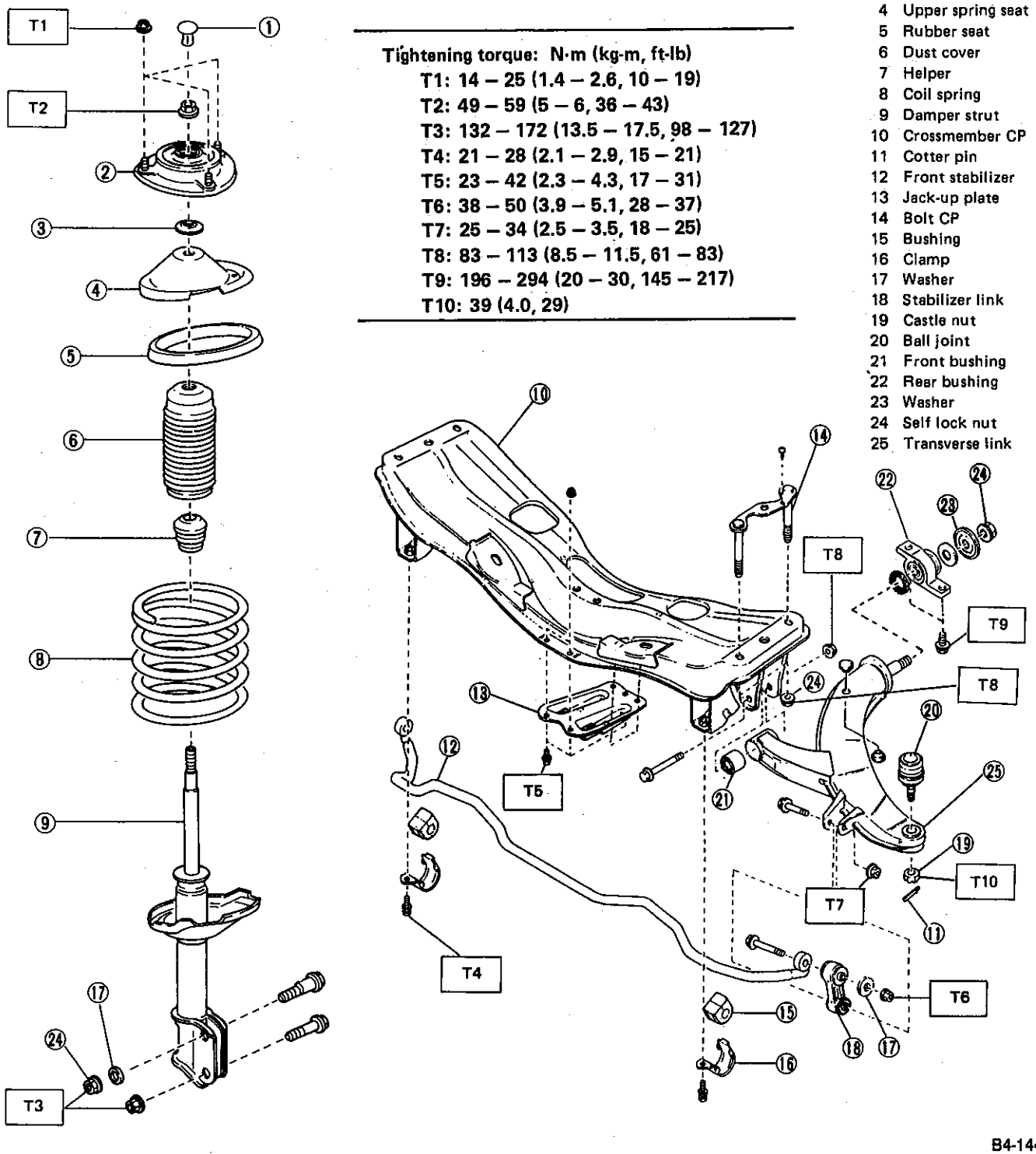

Fig. 21

2. REAR (4WD)

1 Self-lock nut
2 Strut mount
3 Dust cover
4 Coil spring
5 Rear helper
6 Strut CP
7 Flange bolt
8 Rear crossmember
9 Floating bushing
10 Front lateral link
11 Bushing (A)
12 Bushing (B)
13 Bushing (C)
14 Trailing link
15 Bushing
16 Rear stabilizer
17 Stabilizer bushing
18 Stabilizer bracket
19 Clamp
20 Stabilizer link
21 Washer
22 Bushing
23 Bracket CP
24 Stopper
25 Cap
26 Washer
27 Rear lateral link

Tightening torque: N·m (kg-m, ft-lb)

T1:	14 — 25 (1.4 — 2.6, 10 —19)
T2:	49 — 69 (5 — 7, 36 — 51)
T3:	186 — 235 (19 — 24, 137 — 174)
T4:	78 — 118 (8 — 12, 58 — 87)
T5:	98 — 127 (10 — 13, 72 — 94)
T6:	118 — 157 (12 — 16, 87 — 116)
T7:	83 — 113 (8.5 — 11.5, 61 — 83)
T8:	14 — 25 (1.4 — 2.6, 10 — 19)
T9:	18 — 27 (1.8 — 2.8, 13 — 20)
T10:	108 — 147 (11 — 15, 80 — 108)
T11:	18 — 31 (1.8 — 3.2, 13 — 23)

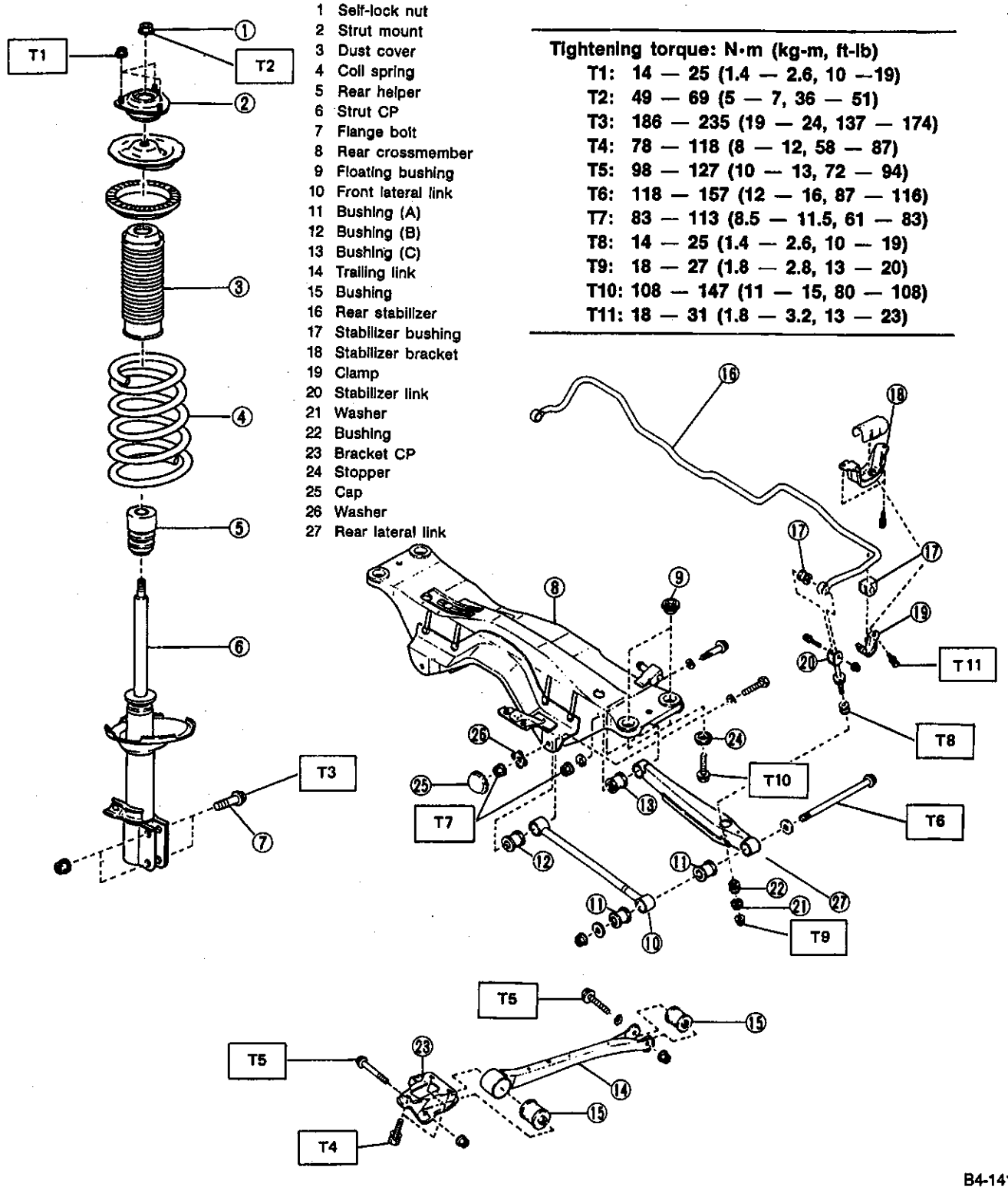

Fig. 22

3. REAR (FWD)

1 Self-lock nut
2 Strut mount
3 Dust cover
4 Coil spring
5 Rear helper
6 Strut CP
7 Flange bolt
8 Rear crossmember
9 Bushing (A)
10 Front lateral link
11 Washer
12 Self lock nut
13 Cap
14 Trailing link
15 Bushing
16 Bracket CP
17 Washer
18 Rear lateral link
19 Bushing
20 Adjusting wheel
21 Bushing (B)
22 Rear stabilizer
23 Stabilizer bracket
24 Stabilizer bushing
25 Clamp
26 Bushing
27 Bushing
28 Stabilizer link

Tightening torque: N·m (kg-m, ft-lb)

T1:	14 — 25 (1.4 — 2.6, 10 — 19)
T2:	49 — 69 (5 — 7, 36 — 51)
T3:	186 — 235 (19 — 24, 137 — 174)
T4:	78 — 118 (8 — 12, 58 — 87)
T5:	98 — 127 (10 — 13, 72 — 94)
T6:	118 — 157 (12 — 16, 87 — 116)
T7:	18 — 27 (1.8 — 2.8, 13 — 20)
T8:	108 — 147 (11 — 15, 80 — 108)
T9:	14 — 25 (1.4 — 2.6, 10 — 19)
T10:	18 — 31 (1.8 — 3.2, 13 — 23)

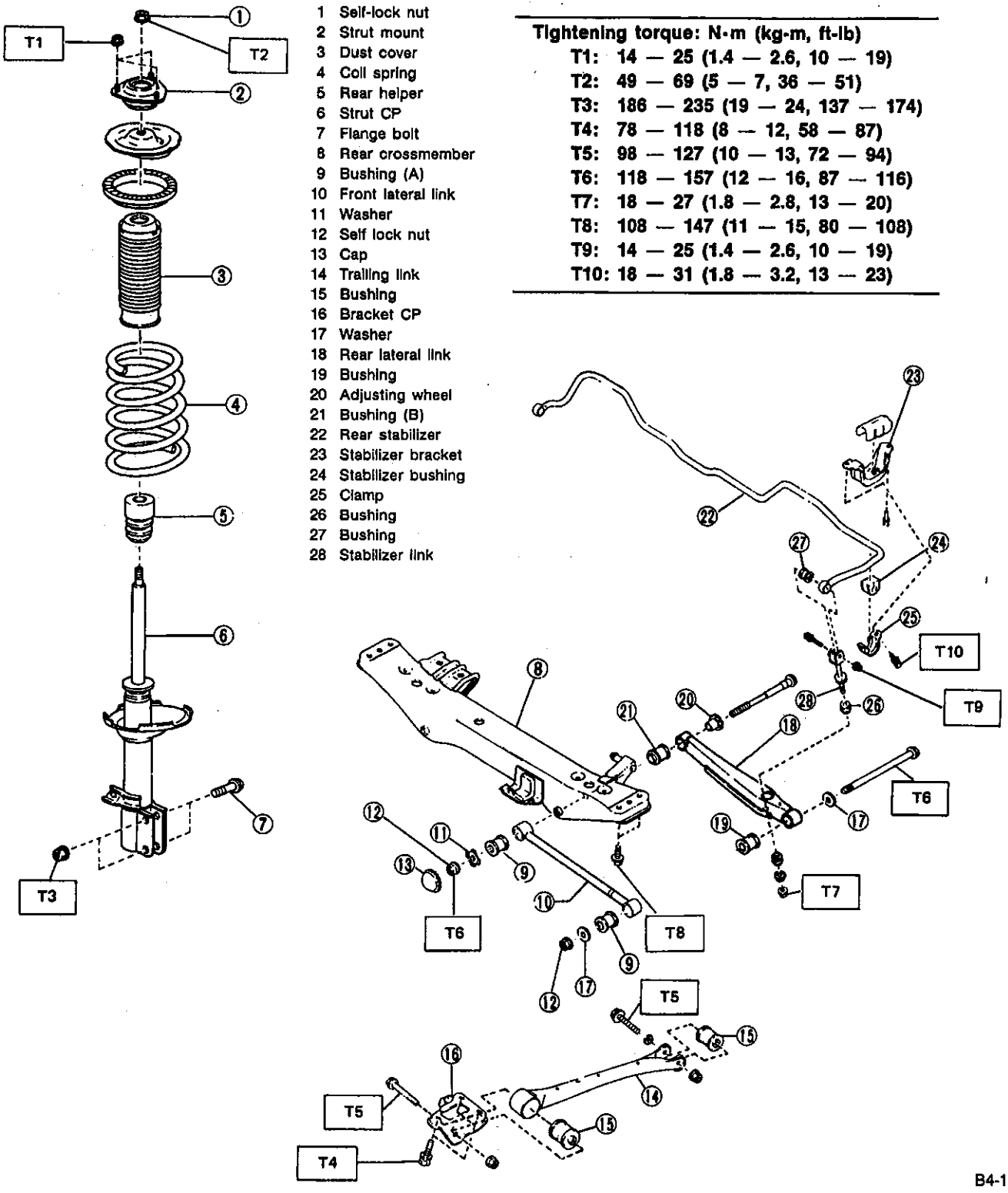

Fig. 23

2. Air (Pneumatic) Suspension

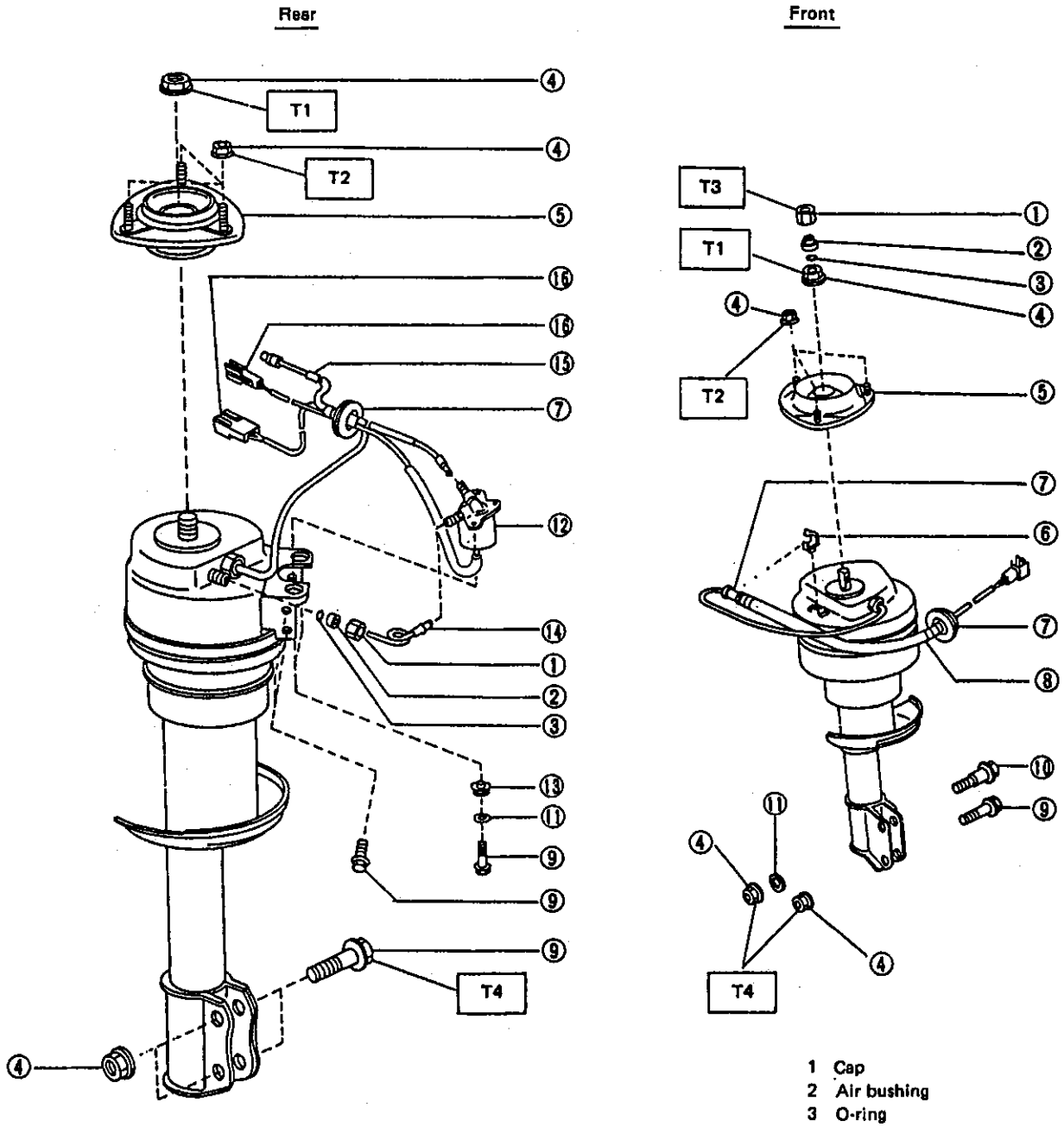

1 Cap
2 Air bushing
3 O-ring
4 Self lock nut
5 Strut mount
6 Clip
7 Grommet
8 Corrugate tube
9 Flange bolt
10 Adjusting bolt
11 Washer
12 Solenoid valve
13 Insulator
14 Air pipe for solenoid valve
15 Air pipe
16 Connector

Tightening torque: N·m (kg-m, ft-lb)
T1: 49 – 69 (5 – 7, 36 – 51)
T2: 14 – 25 (1.4 – 2.6, 10 – 19)
T3: 7 – 17 (0.7 – 1.7, 5.1 – 12.3)
T4: 132 – 172 (13.5 – 17.5, 98 – 126)

Fig. 24

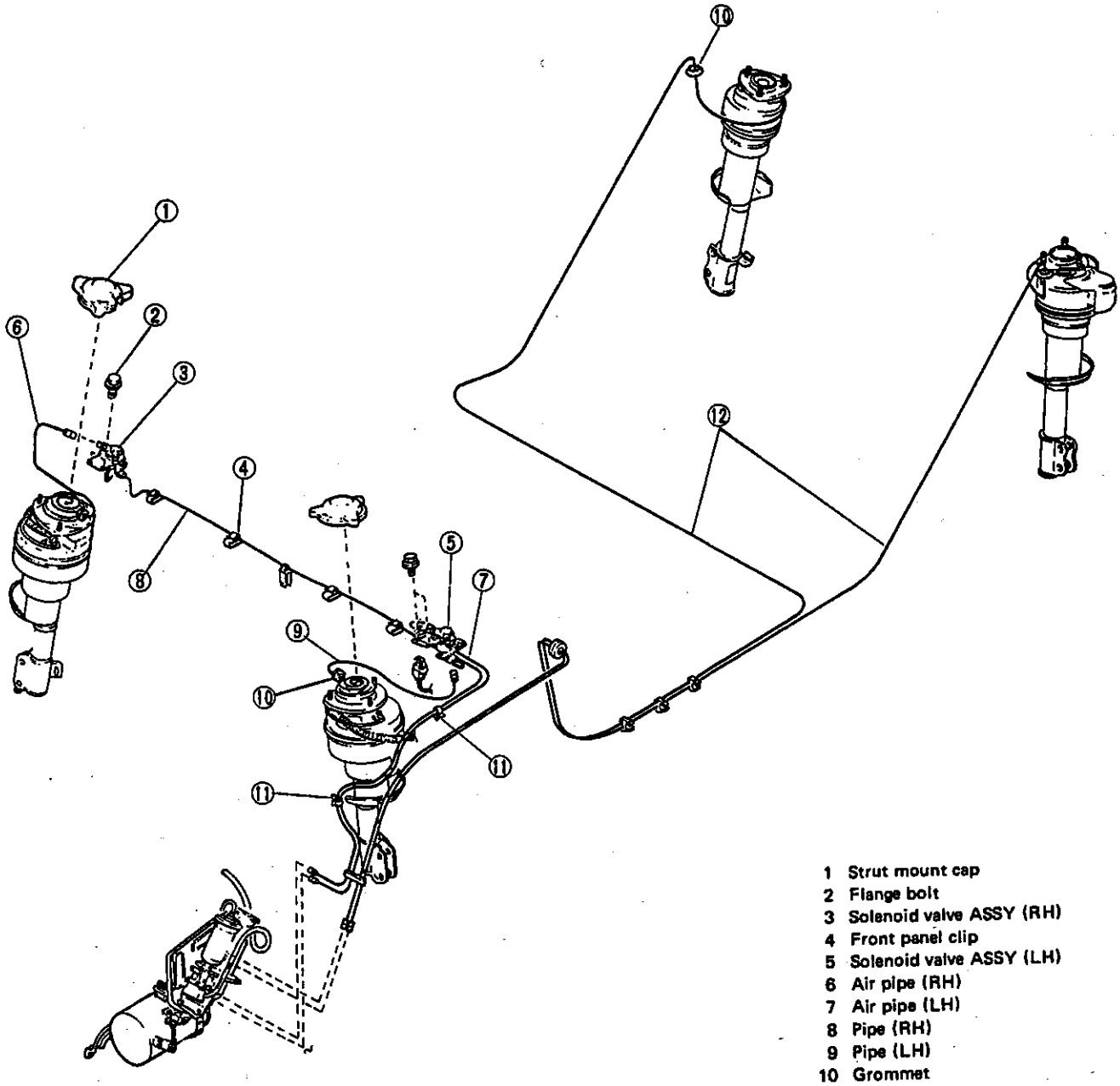

1 Strut mount cap
2 Flange bolt
3 Solenoid valve ASSY (RH)
4 Front panel clip
5 Solenoid valve ASSY (LH)
6 Air pipe (RH)
7 Air pipe (LH)
8 Pipe (RH)
9 Pipe (LH)
10 Grommet
11 Clip
12 Pipe CP (Rear)

B4-292

Fig. 25

W SERVICE PROCEDURE FOR CONVENTIONAL SUSPENSION

1. On-car Services

A: WHEEL ALIGNMENT

Check, adjust and/or measure wheel alignment in accordance wit procedures indicated below:

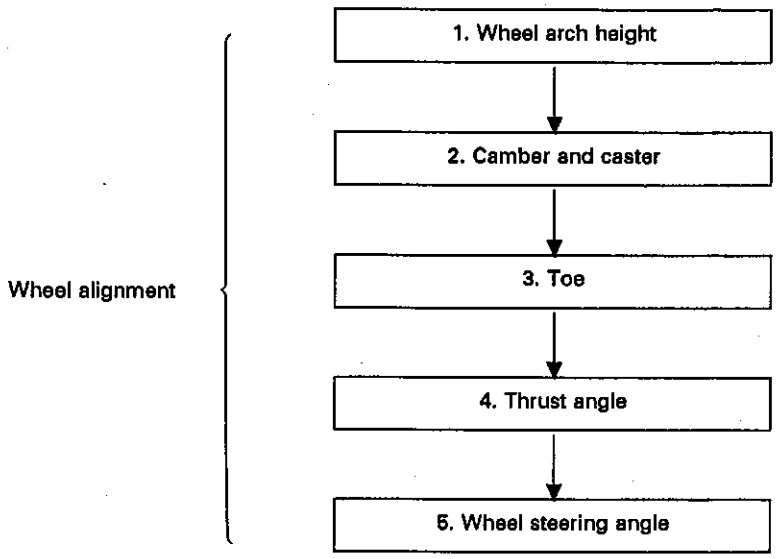

1. WHEEL ARCH HEIGHT

1) Inflate tire pressure to specifications.
2) Set vehicle under "curb weight" conditions. (Empty luggage compartment, install spare tire, jack, service tools, and top up fuel tank.)
3) Set steering wheel in a wheel-forward position.
4) Suspend thread from wheel arch (point "A" in figure below) to determine a point directly above center of spindle.
5) Measure distance between measuring point and center of spindle.

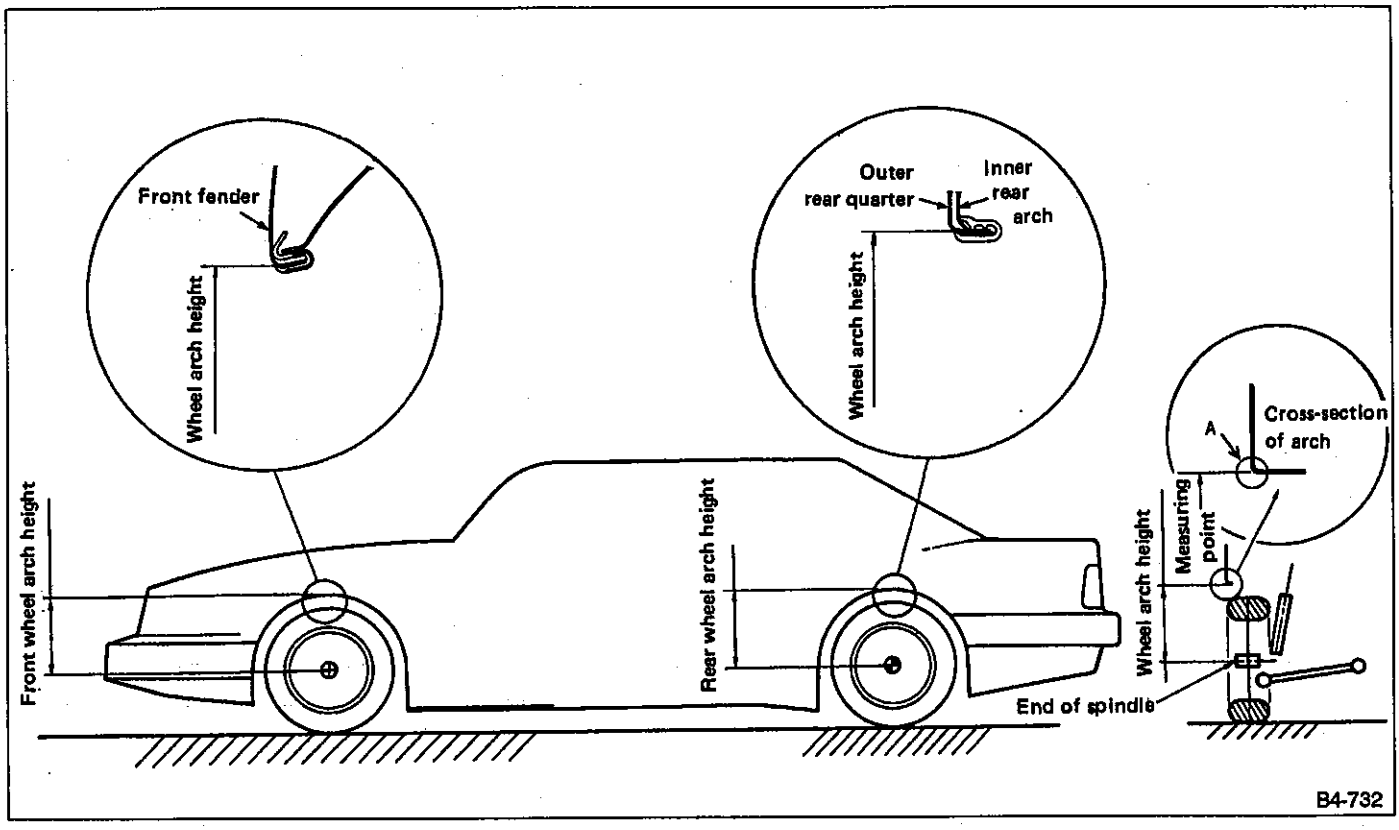

Fig. 26

Vehicles		Specified wheel arch height mm (in)	
		Front	Rear
Sedan	FWD	378 ± 10 (14.88 ± 0.39) *388 ± 10 (15.28 ± 0.39)	359 ± 10 (14.13 ± 0.39) *369 ± 10 (14.53 ± 0.39)
	4WD	388 ± 10 (15.28 ± 0.39)	369 ± 10 (14.53 ± 0.39)
	TURBO	378 ± 10 (14.88 ± 0.39)	364 ± 10 (14.33 ± 0.39)
Wagon	FWD	378 ± 10 (14.88 ± 0.39)	369 ± 10 (14.53 ± 0.39)
	4WD	388 ± 10 (15.28 ± 0.39)	379 ± 10 (14.92 ± 0.39)
	TURBO	378 ± 10 (14.88 ± 0.39)	364 ± 10 (14.33 ± 0.39)
	** Air suspension model	388 ± 10 (15.28 ± 0.39)	369 ± 10 (14.53 ± 0.39)

*: 2200 cc model
**: "Normal" position

2. CAMBER AND CASTER

- Inspection

1) Place the wheel to be measured on the turning radius gauge, and make sure the vehicle is level.
2) Set ADAPTER (927380000) into the center of the wheel, and then install the alignment gauge.

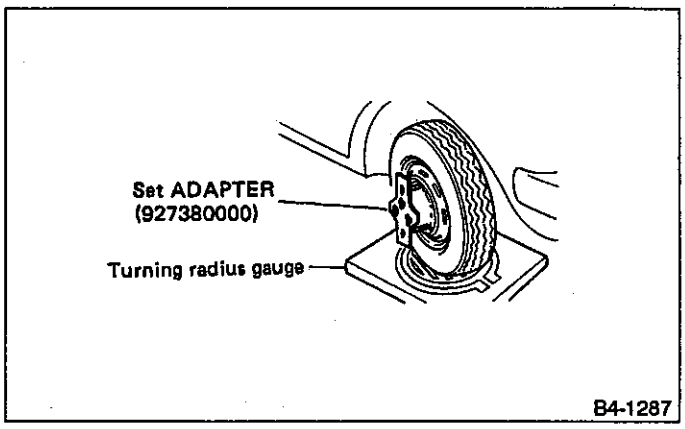

Fig. 27

Refer to the "SPECIFICATIONS AND SERVICE DATA" for the camber and caster values.

- Front camber adjustment

1) Loosen two self-locking nuts located at lower front portion of strut.

a. When adjustment bolt needs to be adjusted, hold its head with a wrench and turn self-locking nut.
b. Discard old self-locking nut and replace with a new one.

2) While aligning scale for adjustment bolt (located at rear of vehicle) with mark on strut bracket, set camber angle within proper specifications.

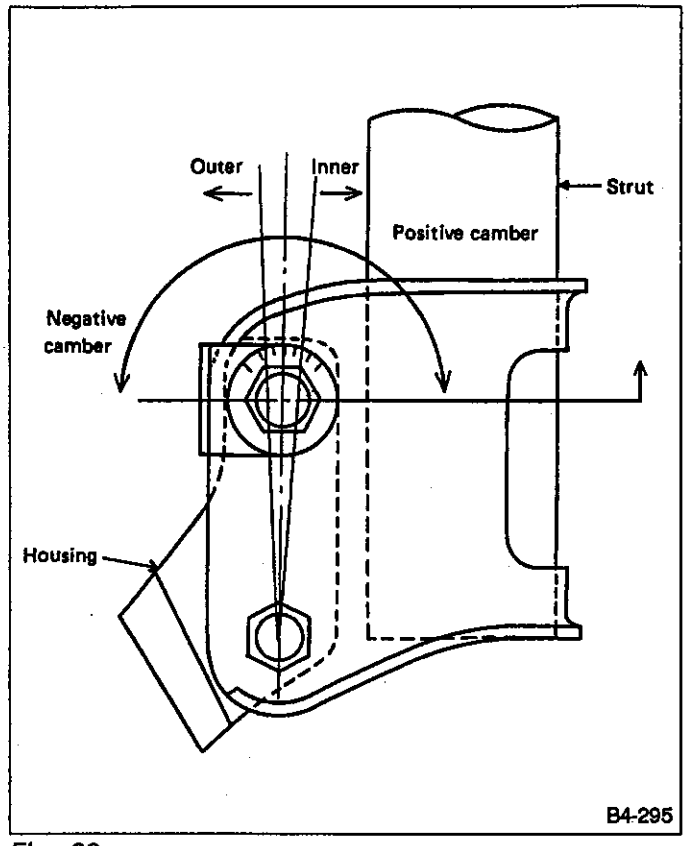

Fig. 28

	Left side	Right side
Rotate clockwise	Positive camber is increased	Negative: Same
Rotate counterclockwise	Negative camber is increased	Positive: Same

3) Tighten two self-locking nuts.

Tightening torque:
132 — 172 N•m (13.5 — 17.5 kg-m, 98 — 127 ft-lb)

3. FRONT WHEEL TOE-IN AND TOE-OUT

- Inspection

Using a toe gauge, measure front wheel toe-in or toe-out.

Toe : 0 ± 3 mm (0 ± 0.12 in)

When using a toe-gauge, make sure to measure as follow;

Move vehicle forward until wheels rotate exactly 180° as shown in the figure.

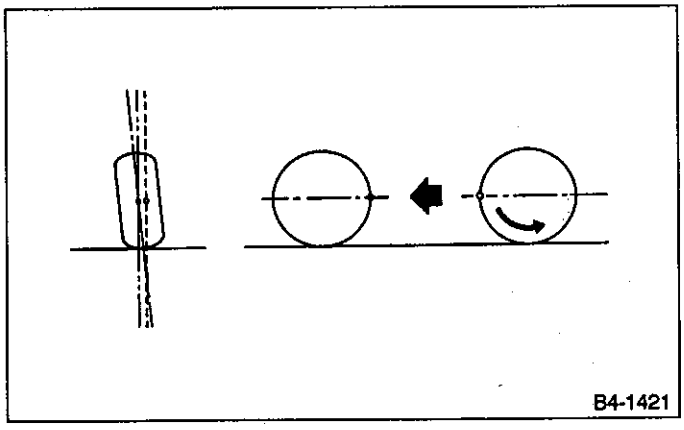

Fig. 29

- Adjustment

1) Loosen the left and right side rod lock nuts.

2) Turn the left and right tie rods equal amounts until the toe-in is within the specified range.

Both the left and right tie-rods are right-hand threaded. To increase toe-in, turn both tie-rods counterclockwise equal amounts (as viewed from the outside of the vehicle).

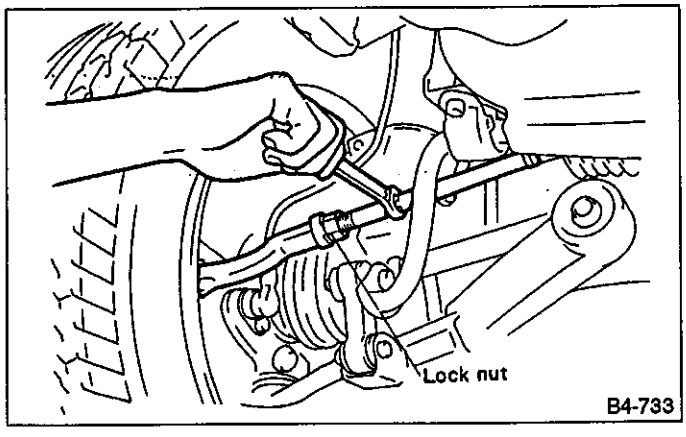

Fig. 30

3) Tighten tie-rod lock nut.

Tightening torque:
78 — 88 N•m (8 — 9 kg-m, 58 — 65 ft-lb)

a. Check that left and right wheel steering angle is within specifications.

b. Correct tie-rod boot if twisted.

4. REAR WHEEL TOE-IN AND TOE-OUT

- Inspection

Using a toe gauge, measure rear wheel toe-in and toe-out.

Toe : 0 ± 3 mm (0 ± 0.12 in)

- Adjustment

1) Remove cap from lateral link and loosen self-locking nut.

a. When loosening or tightening adjustment bolt, hold bolt head and loosen self-locking nut.

b. Replace self-locking nut with a new one.

2) Using two wrenches, turn adjustment wheel and adjustment bolt equally in opposite directions so that toe-in and toe-out are within proper specifications.

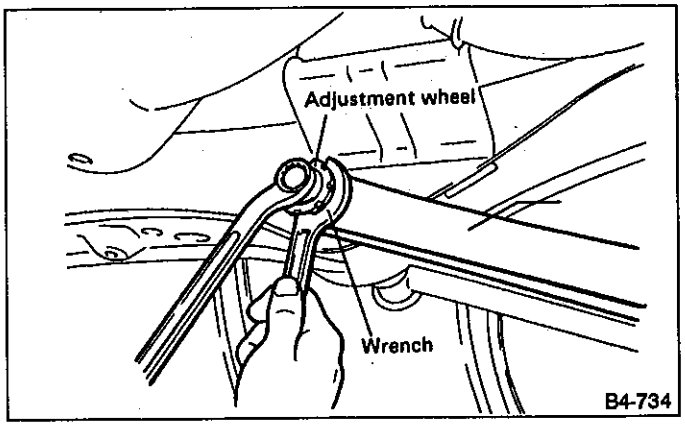

Fig. 31

Rotation direction of adjustment wheel and adjustment bolt	Left wheel toe-in and toe-out	Right wheel toe-in and toe-out
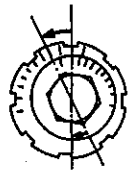	Changes for more "toe-in"	Changes for more "toe-out"
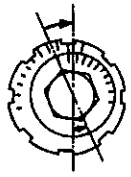	Changes for more "toe-out"	Changes for more "toe-in"

B4-735

Fig. 32

a. Movement of one scale graduation changes toe-in or -out by approximately 4 mm (0.16 in).
b. Turn adjustment wheel and adjustment bolt equally in opposite directions so that same scale graduations are positioned directly above center of the adjustment bolt.

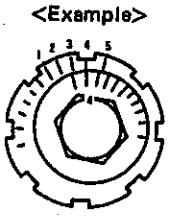

Adjustment wheel and graduated scale on the adjustment bolt are aligned with "4".

B4-736

Fig. 33

3) Tighten self-locking nut.

Tightening torque:
118 — 157 N•m (12 — 16 kg-m, 87 — 116 ft-lb)

5. REAR WHEEL TOE-IN AND TOE-OUT (4WD)

- Inspection

Toe : 0 ± 3 mm (0 ± 0.12 in)

- Adjustment

1) Loosen self-locking nut on rear lateral link.

a. When loosening or tightening adjustment bolt, hold bolt head and turn self-locking nut.
b. Replace self-locking nut with a new one.

2) Turn adjustment bolt head until toe-in and -out are within specifications.

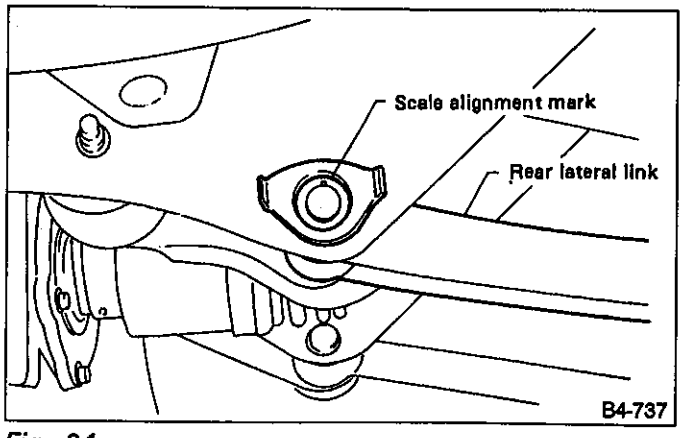

Fig. 34

Rotation direction of adjustment bolt	Toe-in/-out of left wheel	Toe-in/-out of right wheel
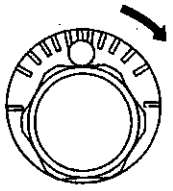	Changes for more "toe-in"	Changes for more "toe-out"
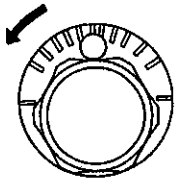	Changes for more "toe-out"	Changes for more "toe-in"

B4-738

Fig. 35

Movement of one scale graduation changes toe-in or -out by approximately 3 mm (0.12 in).

3) Tighten self-locking nut.

Tightening torque:
83 — 113 N•m (8.5 — 11.5 kg-m, 61 — 83 ft-lb)

6. THRUST ANGLE

- Inspection

1) Position vehicle on a level surface.
2) Move vehicle 3 to 4 meters directly forward.
3) Determine locus of both front and rear axles.
4) Measure difference "L" between locus on the axles.

(For reference)

Thrust angle is less than 20′ when "L" is equal to or less than 15 mm.

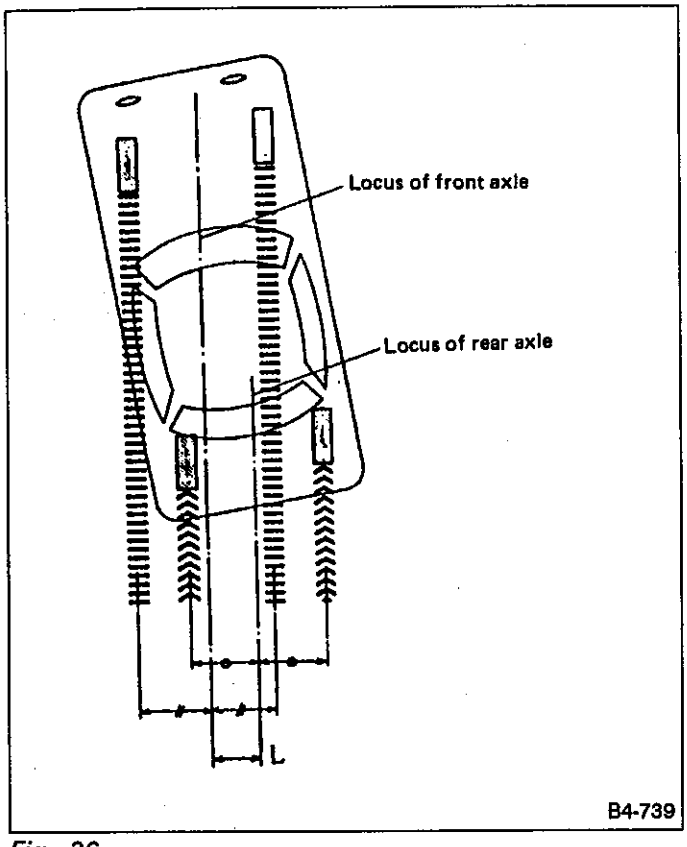

Fig. 36

- Adjustment

Make thrust angle adjustments for left and right rear wheels by turning toe-in and -out adjustment bolts or adjustment wheels (for FWD models) equally in the same direction.

(For reference)

• When one rear wheel is adjusted in a toe-in direction, adjust the other rear wheel equally in toe-out direction, in order to make thrust angle adjustment.

• When left and right adjustment bolts are turned incrementally in the same direction (except for FWD models), the thrust angle will change approximately 10′ ["L" is nearly equal to 7.5 mm (0.295 in)]. On FWD models, adjustment wheels must be turned by the same amount in opposite directions.

Standard thrust angle:
Less than ± 20′

7. STEERING ANGLE

- Inspection

1) Place vehicles on a turning radius gauge.
2) While depressing brake pedal, turn steering wheel fully to the left and right. With steering wheel held at each fully turned position, measure both the inner and outer wheel steering angle.

Steering angle	Non TURBO	TURBO
Inner wheel	$39^\circ {}^{+1^\circ}_{-1.5^\circ}$	$36.5^\circ {}^{+1^\circ}_{-1.5^\circ}$
Outer wheel	$33.5^\circ \pm {}^{1^\circ}_{1.5^\circ}$	$32.0^\circ \pm {}^{1^\circ}_{1.5^\circ}$

- Adjustment

Turn tie-rod to adjust steering angle of both inner and outer wheels.

a. Check toe-in and -out.
b. Correct boot if twisted.

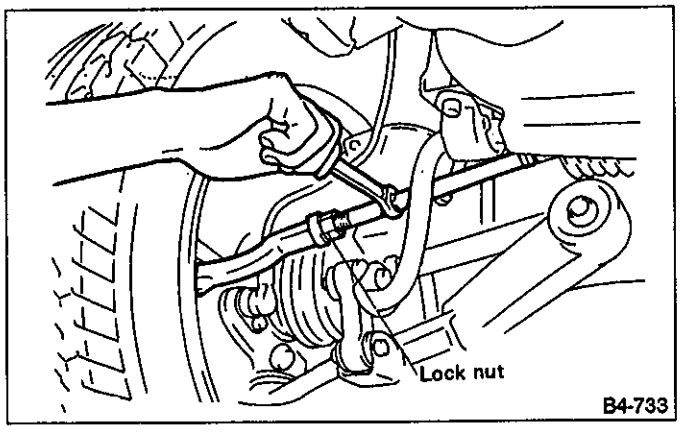

Fig. 37

2. Front Transverse Link Assembly

A: REMOVAL

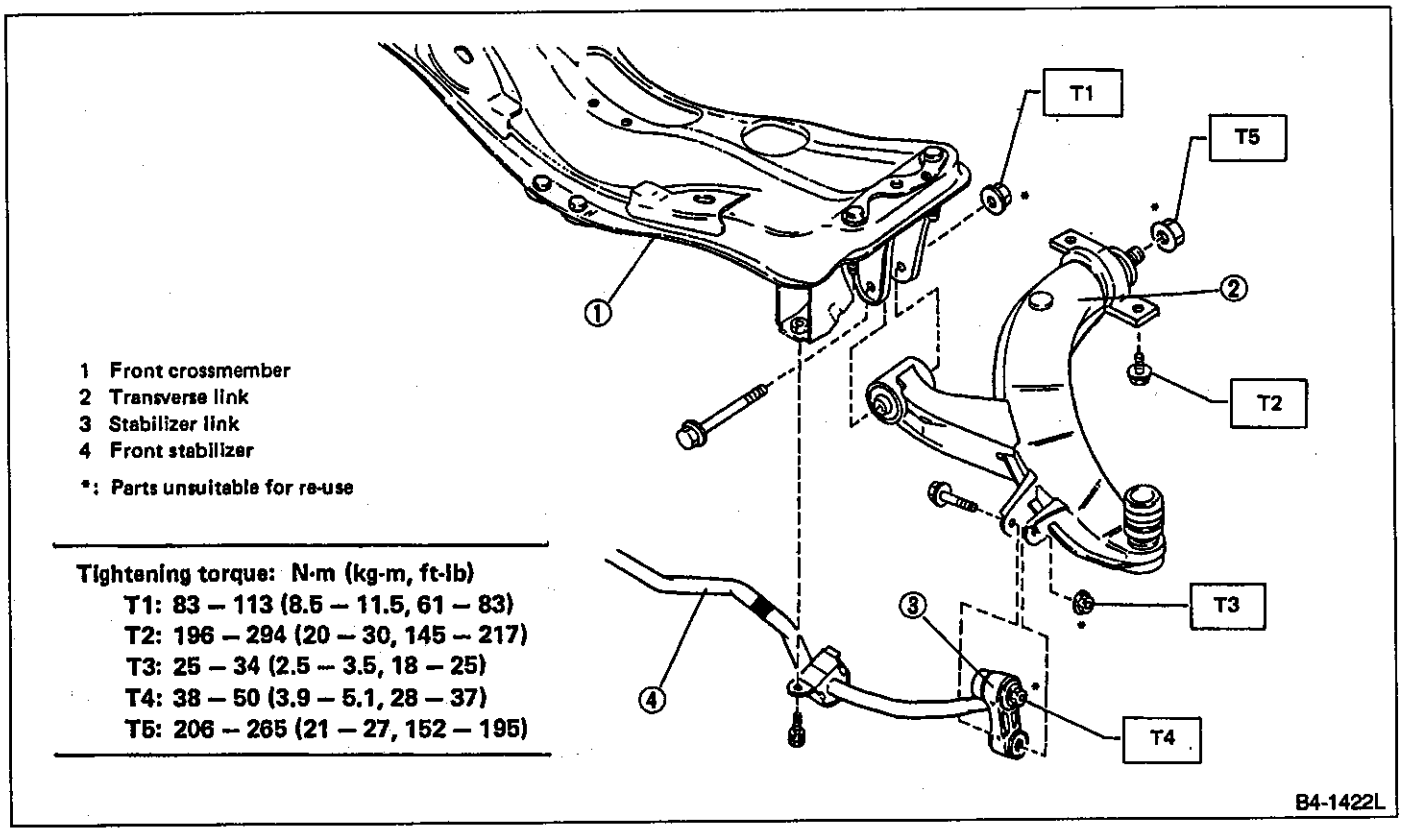

Fig. 38

1) Disconnect transverse link and stabilizer link.
2) Disconnect housing and ball joint.

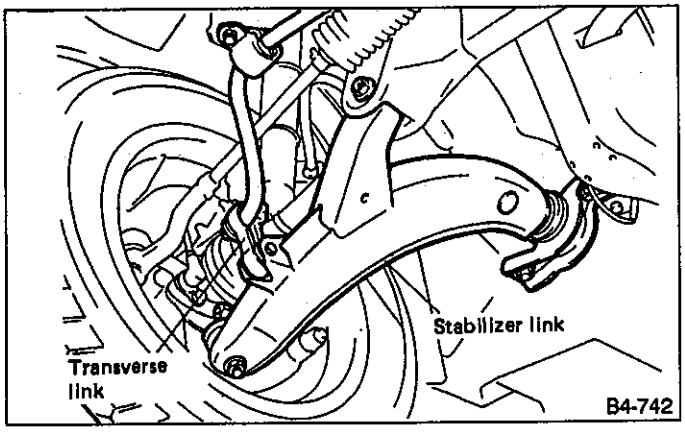

Fig. 39

3) Remove nuts (do not remove bolts) securing transverse link to crossmember.
4) Remove two bolts securing rear of transverse link to car body at bushing location.

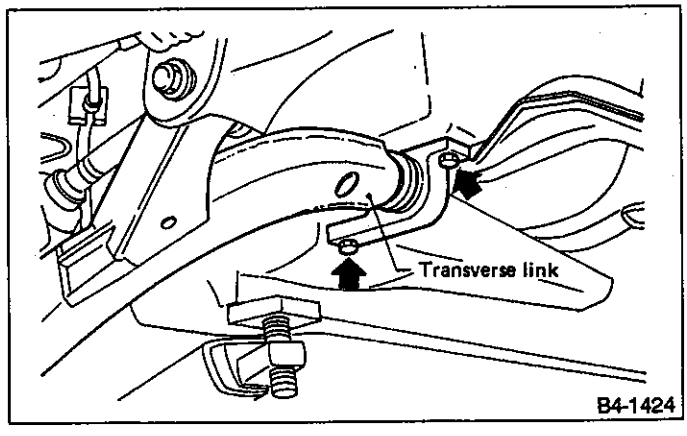

Fig. 40

5) Extract ball joint from housing.
6) Remove bolts securing transverse link to crossmember and lower transverse link to floor.

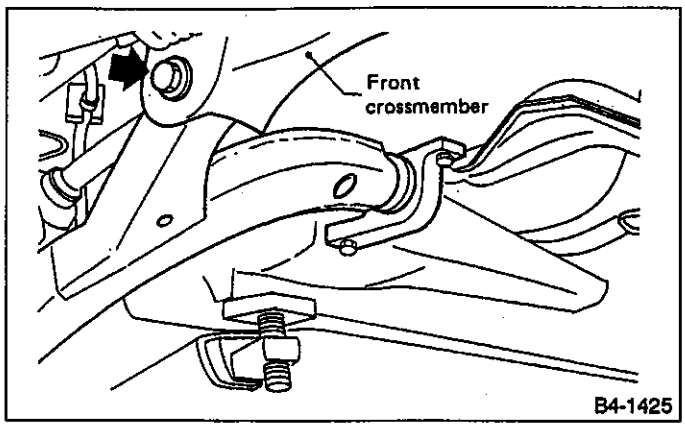

Fig. 41

B: DISASSEMBLY

1. FRONT BUSH

Using an INSTALLER & REMOVER SET (927680000), press front bushing out of place.

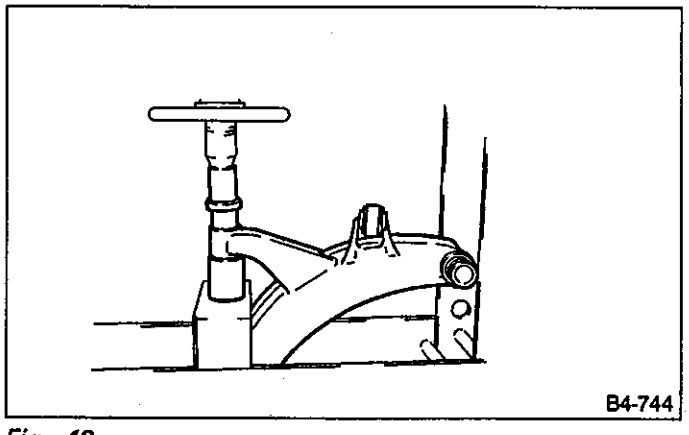

Fig. 42

2. REAR BUSH

1) Scribe an alignment mark on transverse link and rear bushing.

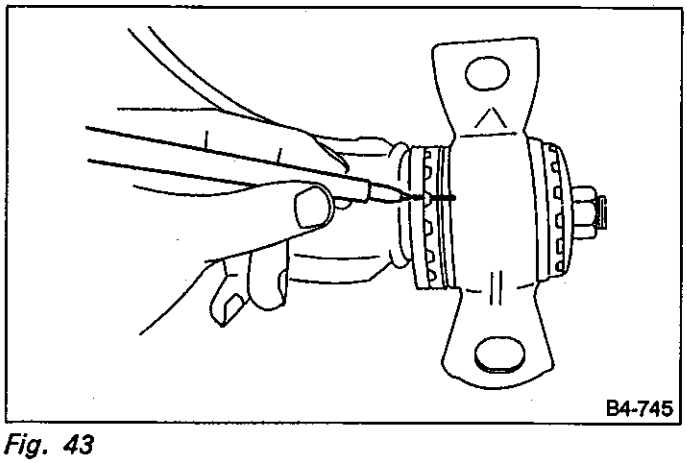

Fig. 43

2) Loosen nut and remove rear bushing.

C: INSPECTION

1) Check transverse link for wear, damage and cracks, and correct or replace if defective.
2) Check bushings for cracks, fatigue or damage.

D: ASSEMBLY

1. FRONT BUSH

To reassemble, reverse disassembly procedures.

a. Discard old front bushing and replace with a new one.

b. Install front bushing in correct direction, as shown in Figure 44.

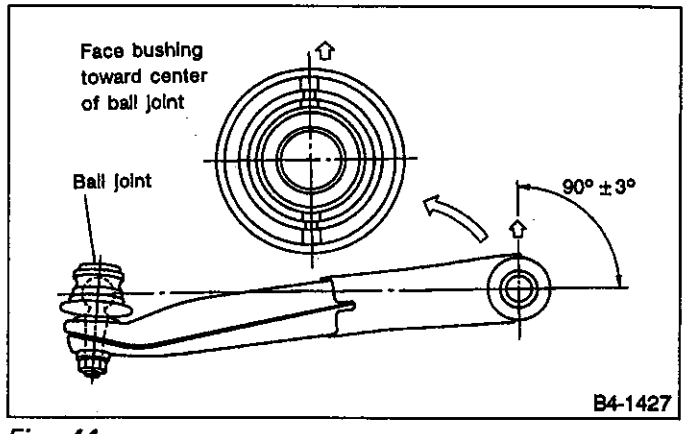

Fig. 44

2. REAR BUSH

1) Insert rear bushing into bore in transverse link and align alignment marks scribed on the two.
2) Tighten self-locking nut.

a. Discard old self-locking nut and replace with a new one.

b. While holding rear bushing to change position of alignment marks, tighten self-locking nut.

Tightening torque:
206 — 265 N•m (21 — 27 kg-m, 152 — 195 ft-lb)

E: INSTALLATION

1) Temporarily tighten two bolts located behind the transverse link at bushing location.

These bolts should be tightened to such an extent that they can still move back and forth in the oblong shaped hole in the bracket (which holds the bushing).

2) Install bolts used to connect transverse link and crossmember and temporarily tighten with nuts.

Self-lock nut must be replaced with a new one whenever it is removed.

3) Insert ball joint into housing.
4) Connect stabilizer link to transverse link, and temporarily tighten bolts.

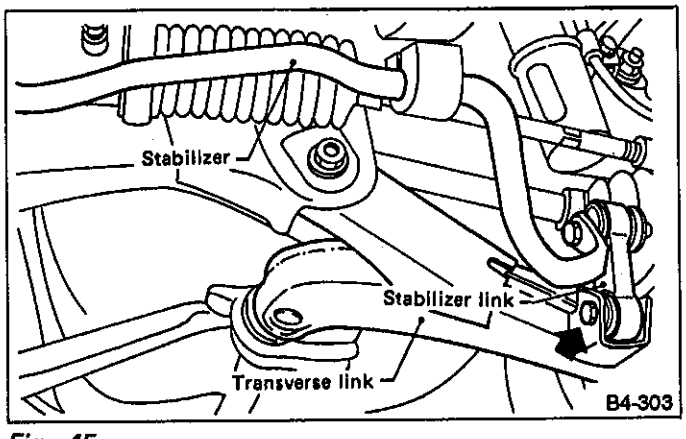

Fig. 45

Self-lock nut must be replaced with a new one whenever it is removed.

5) Tighten the following points in the order shown below when vehicle is empty and wheels are firmly on the ground.

(1) Transverse link and stabilizer

Tightening torque:
25 — 34 N•m (2.5 — 3.5 kg-m, 18 — 25 ft-lb)

(2) Transverse link and crossmember

Tightening torque:
83 — 113 N•m (8.5 — 11.5 kg-m, 61 — 83 ft-lb)

(3) Transverse link rear bushing and body

Tightening torque:
196 — 294 N•m (20 — 30 kg-m, 145 — 217 ft-lb)

Move rear bushing back and forth until transverse link-to-rear bushing clearance is established (as indicated in Figure 46.) before tightening.

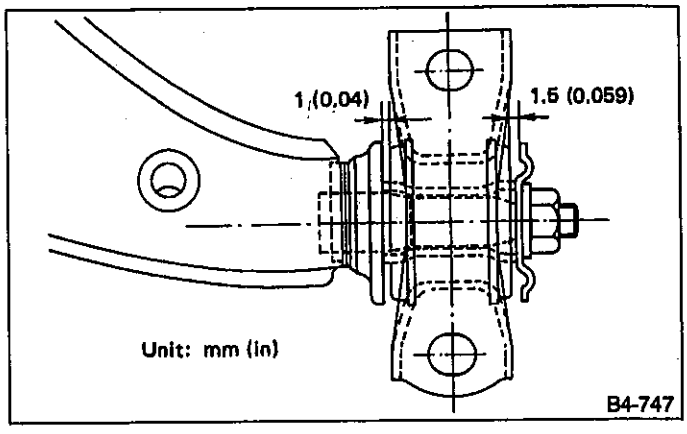

Fig. 46

3. Front Ball Joint

A: REMOVAL

1) Remove the wheels.
2) Pull out the cotter pin from the ball stud, remove the castle nut, and remove the ball stud from the transverse link.

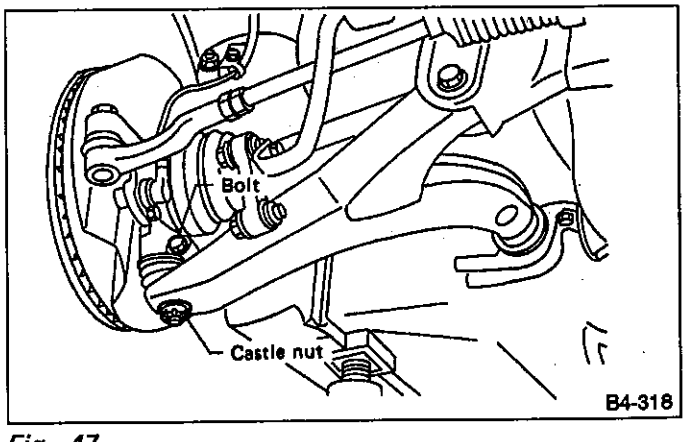

Fig. 47

3) Remove the bolt securing the ball joint to the housing.
4) Remove the ball joint from the housing.

B: INSPECTION

1) Measure play of ball joint by the following procedures. Replace with a new one when the play exceeds the specified value.

(1) With 686 N (70 kg, 154 lb) loaded in the direction shown in the figure, measure dimension ℓ_1.

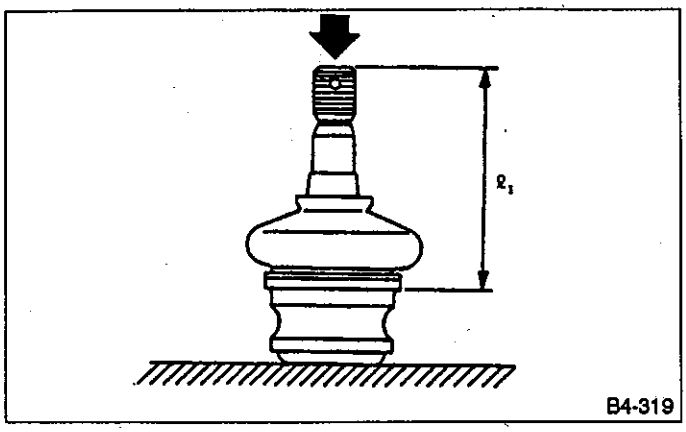

Fig. 48

(2) With 686 N (70 kg, 154 lb) loaded in the direction shown in the figure, measure dimension ℓ_2.

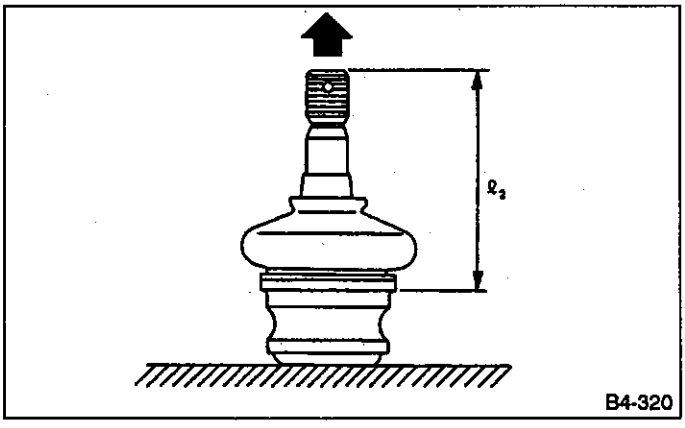

Fig. 49

(3) Calculate plays from the following formula.
$S = \ell_2 - \ell_1$

(4) When plays is larger than the following figure, replace with a new one.

FRONT BALL JOINT
Specified play for replacement: S
More than 0.3 mm (0.012 in)

2) When play is smaller than the specified value, visually inspect the dust seal.
3) If the dust seal is damaged, remove it and wipe off any deteriorated grease with a clean cloth.
4) Next, replace with an appropriate quantity of specified grease (SUNLIGHT 2; P/N 003602010), about 3 g (0.11 oz), then mount a new dust seal.

C: INSTALLATION

1) Install ball joint onto housing.

Torque (Bolt):
39 — 59 N•m (4.0 — 6.0 kg-m, 29 — 43 ft-lb)

a. The ball joint and boot that have been removed must be checked for wear, damage or cracks, and any defective part must be replaced.
b. Do not apply grease to tapered portion of ball stud.

2) Connect ball joint to transverse link.

Torque (Castle nut):
39 N•m (4.0 kg-m, 29 ft-lb)

3) Retighten castle nut further within 60° until a slot in castle nut is aligned with the hole in ball stud end, then insert new cotter pin and bend it around castle nut.
4) Install front wheels, and lower vehicle.

4. Front Strut Assembly

A: REMOVAL

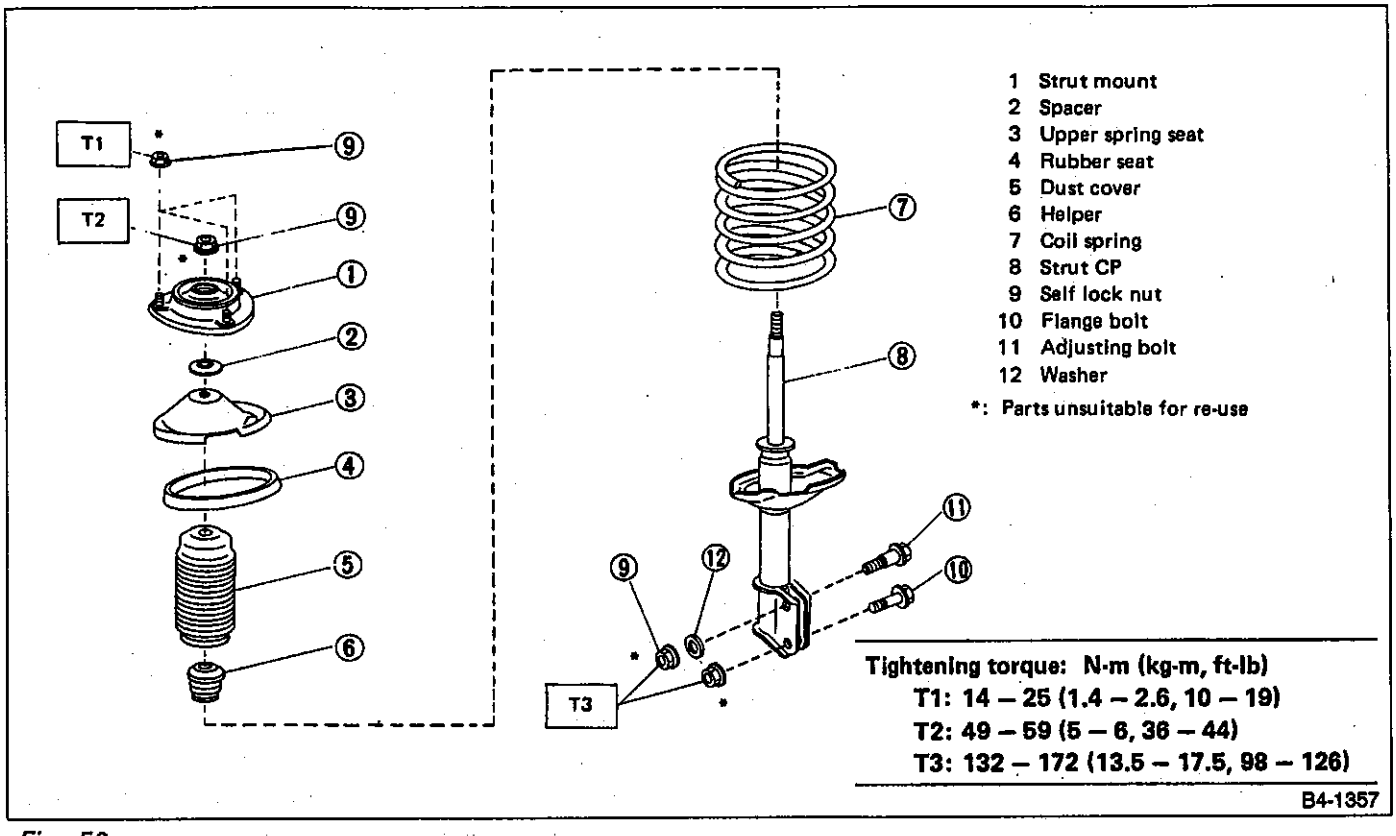

Fig. 50

1) Disconnect ground cable from battery.
2) Remove wheel.
3) Depress brake pedal and hold it down using a wooden block.
4) Remove union bolts form caliper.

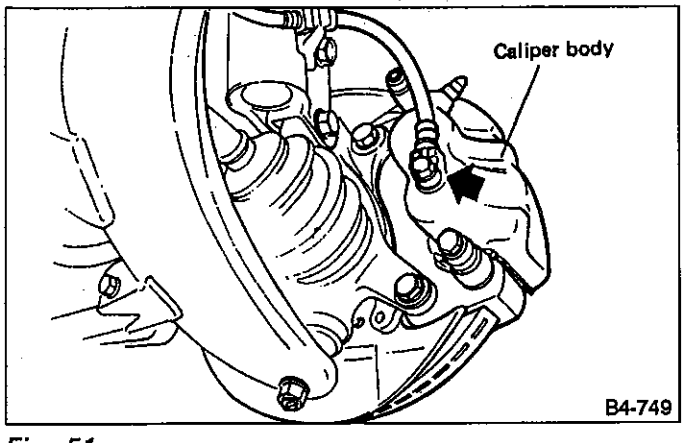

Fig. 51

Use brake hose cap to prevent brake fluid from escaping.

5) Remove brake hose clamp and disconnect brake hose from strut. Attach brake hose to strut using gum tape.

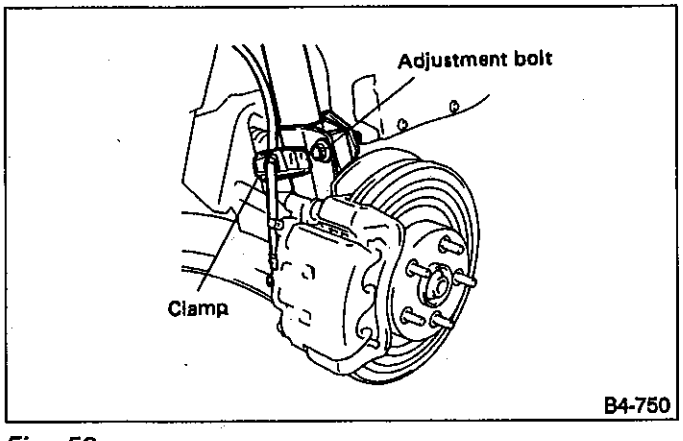

Fig. 52

6) Scribe an alignment mark on the camber adjustment bolt which secures strut to housing.
7) Remove bolt securing the ABS sensor harness on models equipped with ABS.
8) Remove two bolts securing housing to strut.

While holding head of adjustment bolt, loosen self-locking nut.

9) Remove the three nuts.

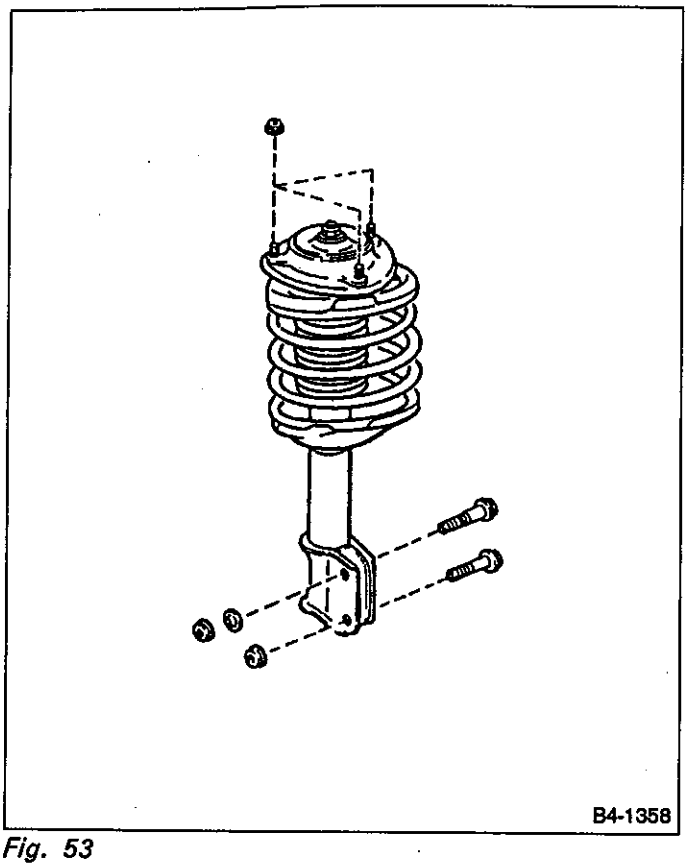

Fig. 53

B: DISASSEMBLY

1) Using a coil spring compressor, compress coil spring.

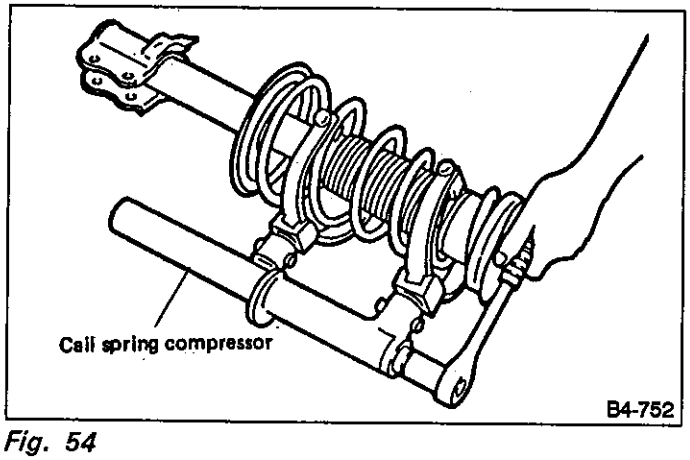

Fig. 54

2) Using STRUT MOUNT SOCKET (927760000), remove self-locking nut.

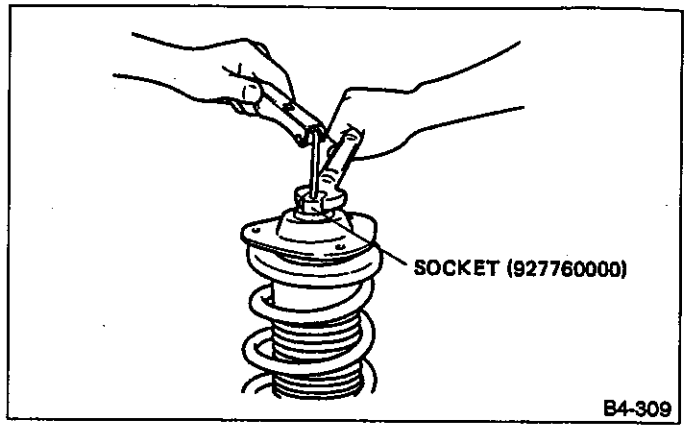

Fig. 55

3) Remove strut mount, upper spring seat and rubber seat from strut ASSY.
4) While gradually decreasing compression force, remove coil spring.
5) Remove dust cover and helper spring.

C: INSPECTION

Check the disassembled parts for cracks, damage and wear, and replace with new parts if defective.

1. DAMPER STRUT

1) Check for oil leakage.
2) Move the piston rod up and down to check its operates smoothly without any binding.
3) Deflection of piston rod
Measure the deflection as follows:
Fix the outer shell and fully extend the rod. Set a dial gauge at the end of the rod, and apply a weight of ± 20 N (± 2 kg, ± 4 lb) to the threaded portion. Read the dial gauge indication. The amplitude of the gauge needle pointer is the deflection of the rod.

Limit of deflection:
Less than 0.8 mm (0.031 in)

If the deflection is greater, replace the strut.

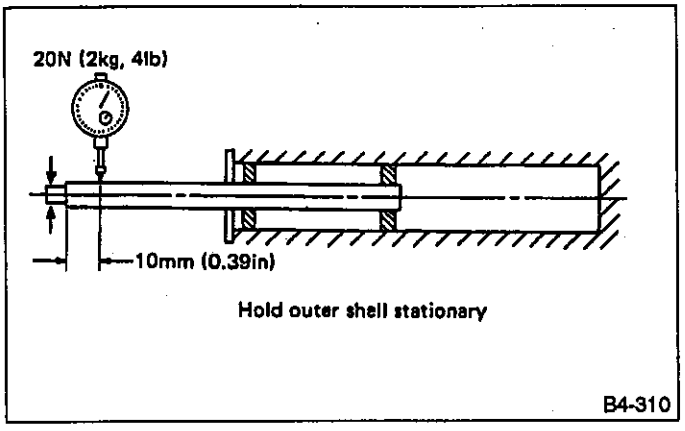

Fig. 56

2. STRUT MOUNT

1) Check rubber part for creep, cracks and deterioration, and replace it with new one if defective.
2) If distortion is found on its connecting surface to body, replace it with a new one.

3. DUST COVER

If any cracks or damage are found, replace it with a new one.

4. COIL SPRING

One having permanent strain should be replaced with a new one. When vehicle posture is uneven, although there are no considerable reasons like tire puncture, uneven loading, etc., check coil spring for its free length, cracks, etc., referring to specifications, and replace it with a new one if defective.

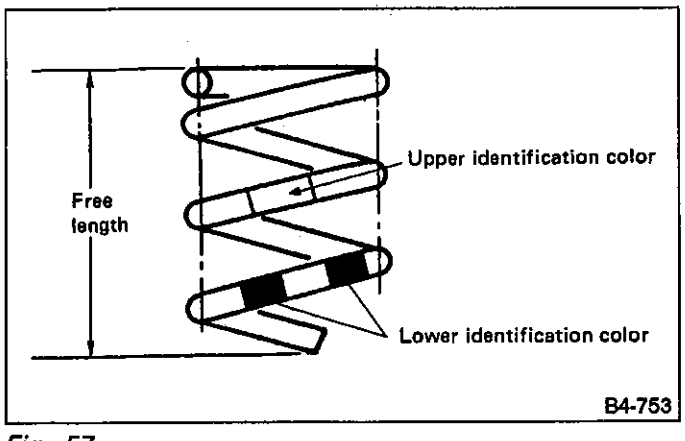

Fig. 57

5. HELPER

Replace it with new one if cracked or damaged.

D: ASSEMBLY

1) Compress the coil spring.

Make sure that the vertical installing direction of coil spring is as shown below.

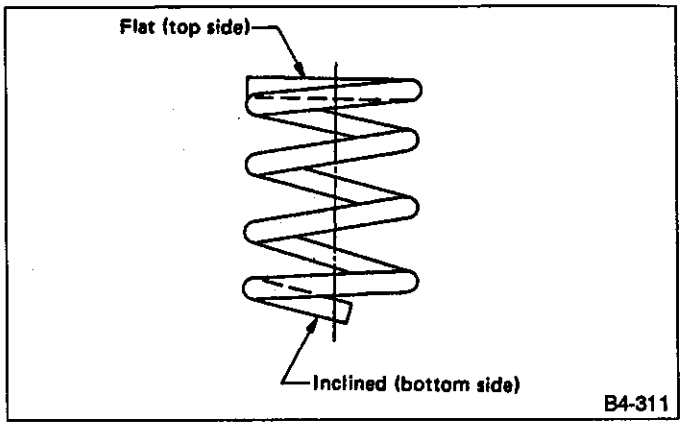

Fig. 58

2) Set the coil spring correctly so that its end face fits well into the spring seat as shown.

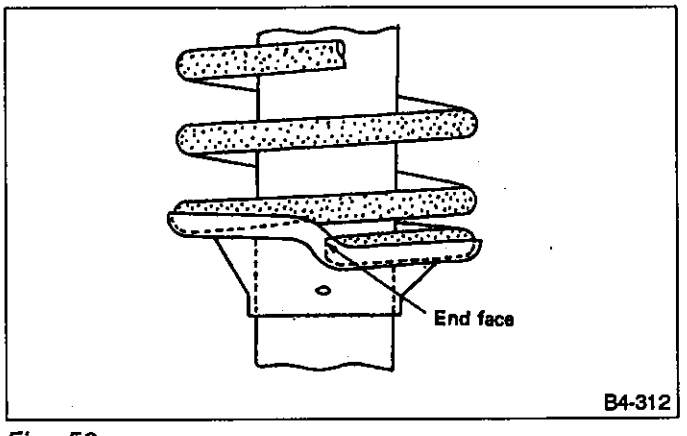

Fig. 59

3) Install helper and dust cover to the piston rod.
4) Pull the piston rod fully upward, and install rubber seat and spring seat.

Ensure that upper spring seat is positioned with "OUT" mark facing outward.

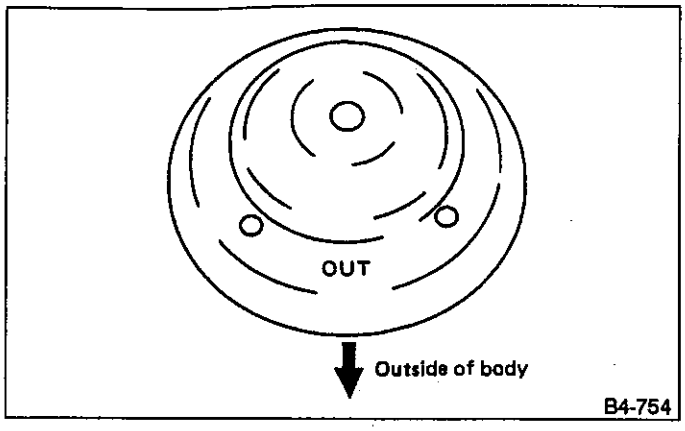

Fig. 60

5) Install strut mount to the piston rod, and tighten the self-lock nut temporarily.

Be sure to use a new self-lock nut.

6) Loosen the coil spring carefully.
7) While fixing the spring seat, tighten the self-lock nut with SOCKET (927760000).

Tightening torque:
49 — 69 N•m (5.0 — 7.0 kg-m, 36 — 51 ft-lb)

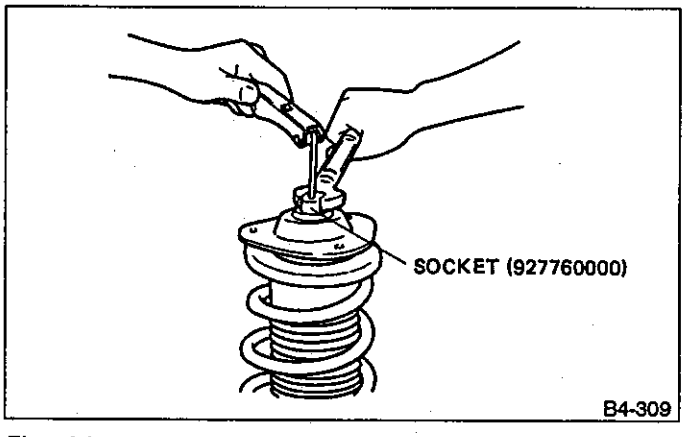

Fig. 61

E: INSTALLATION

1) Install upper strut mount and tighten with bolts.

Tightening torque:
14 — 25 N•m (1.4 — 2.6 kg-m, 10 — 19 ft-lb)

2) Install ABS sensor attaching bolts. (ABS-equipped models)

Tightening torque:
132 — 172 N•m (13.5 — 17.5 kg-m, 98 — 127 ft-lb)

3) Position alignment mark on camber adjustment bolt with alignment mark on lower side of strut.

a. While holding head of adjustment bolt, tighten self-locking nut.
b. Be sure to use new self-lock nut.

Tightening torque:
132 — 172 N•m (13.5 — 17.5 kg-m, 98 — 127 ft-lb)

4) Tighten brake hose on lower side of strut with clamp.
5) Install union bolts which secure brake caliper to brake hose.

Tightening torque:
15 — 21 N•m (1.5 — 2.1 kg-m, 11 — 15 ft-lb)

Be sure to bleed air from brake system.

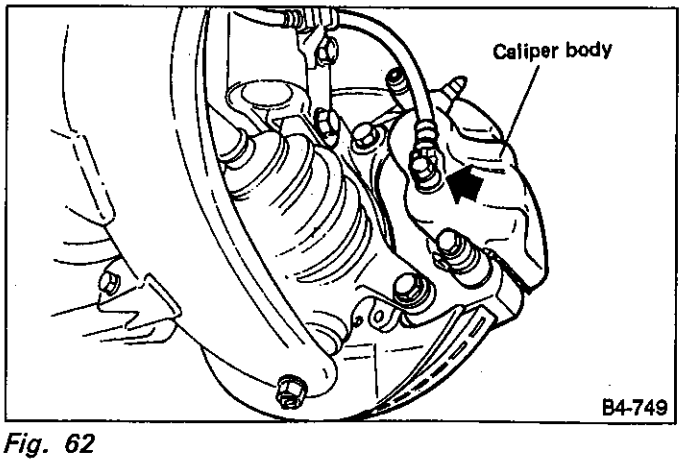

Fig. 62

6) Install wheels and connect ground cable to negative terminal of battery.

5. Front Stabilizer

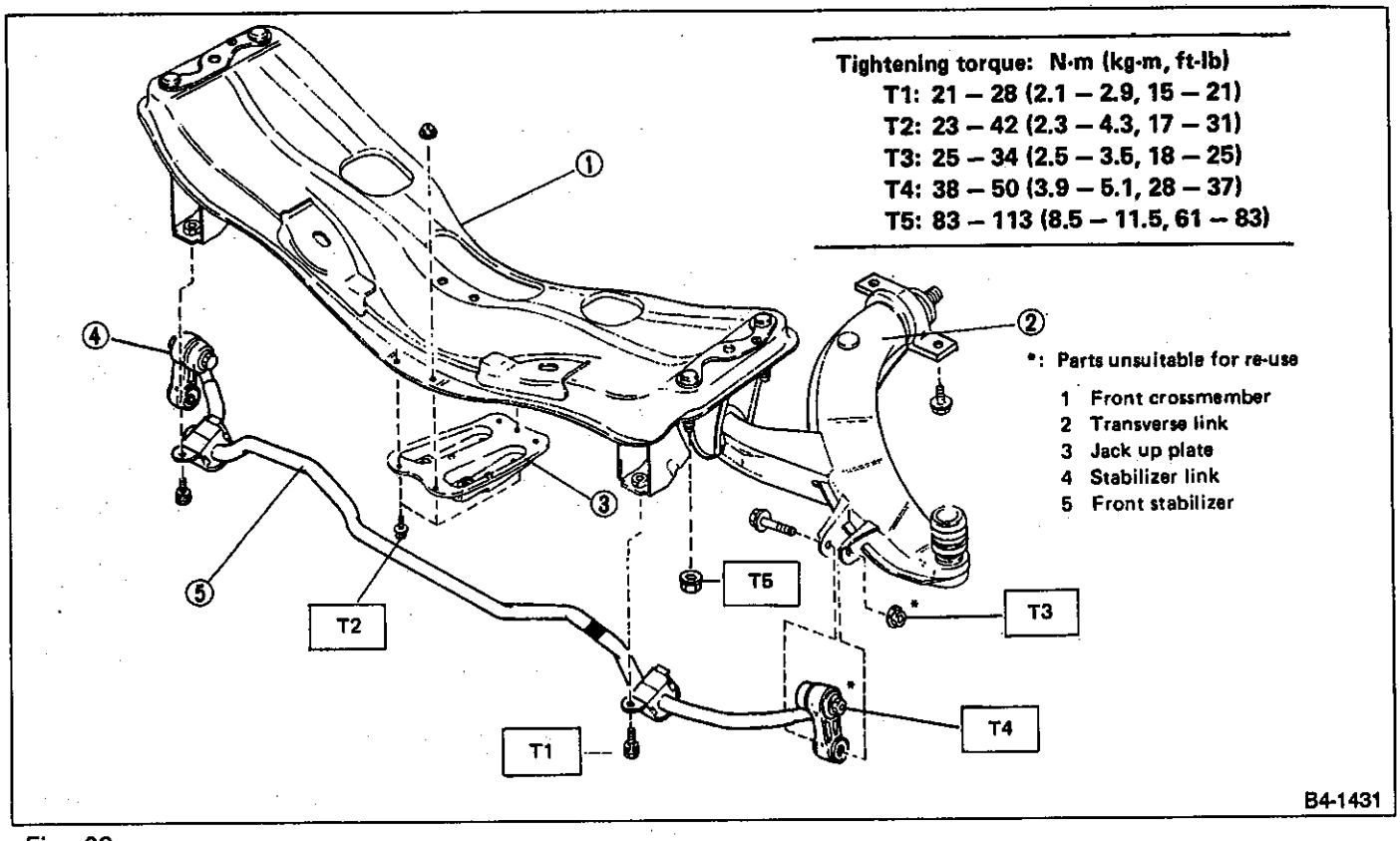

Fig. 63

A: REMOVAL

1) Jack up the front part of the vehicle.
2) Remove bolts which secure crossmember to stabilizer.

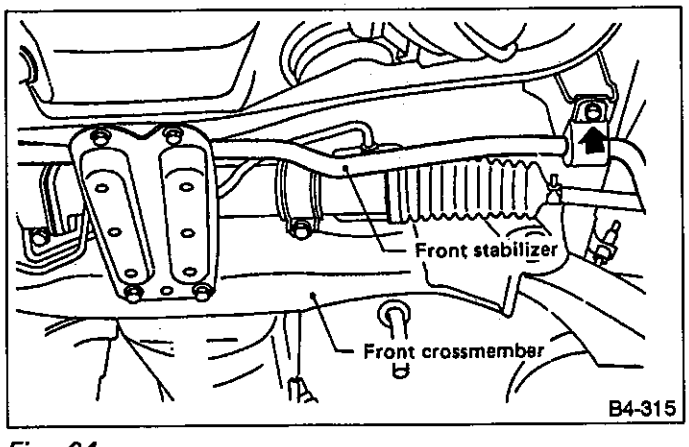

Fig. 64

3) Remove bolts which secure stabilizer link to front transverse link ASSY.

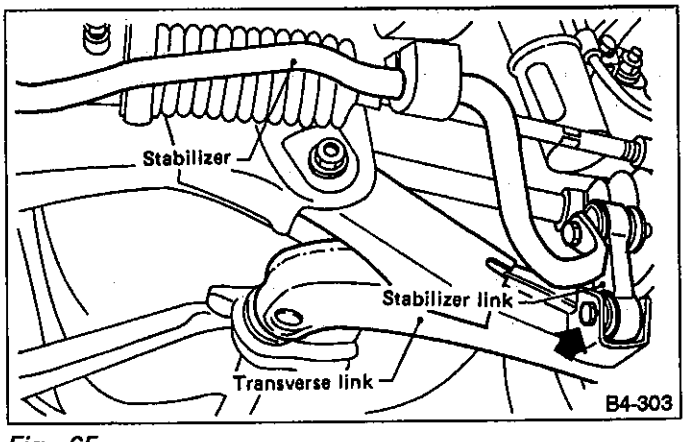

Fig. 65

4) Remove jack up plate from lower part of crossmember.

B: INSPECTION

1) Check bushing for cracks, fatigue or damage.
2) Check links for deformities, cracks, or damage, and bushing for protrusions beyond clamp.

C: INSTALLATION

To install, reverse the removal procedure.

a. Install bushing (on front crossmember side) while aligning it with paint mark on stabilizer.

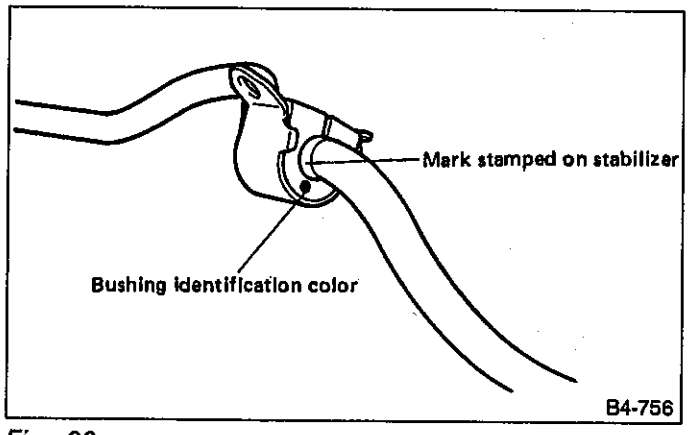

Fig. 66

b. Ensure that bushing and stabilizer have the same identification colors when installing.
c. Fit each bush securely, and tighten bolts with the tires placed on the ground when the vehicle is not loaded.
d. Tightening torque:

Jack up plate to crossmember:
23 — 42 N•m (2.3 — 4.3 kg-m, 17 — 31 ft-lb)
Stabilizer link to front transverse link:
25 — 34 N•m (2.5 — 3.5 kg-m, 18 — 25 ft-lb)
Stabilizer to crossmember:
21 — 28 N•m (2.1 — 2.9 kg-m, 15 — 21 ft-lb)

6. Front Crossmember

A: REMOVAL

1) Disconnect ground cable from battery.
2) Loosen front wheel nuts.
3) Jack up vehicle, support it with safety stands (rigid racks), and remove front tires and wheels.
4) Remove both stabilizer and jack-up plate.

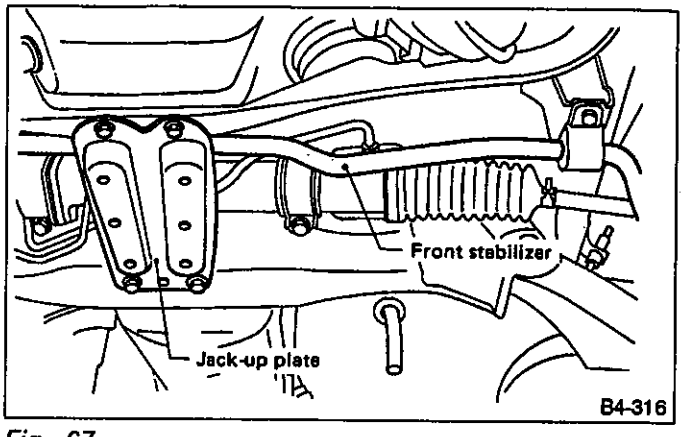

Fig. 67

5) Disconnect tie-rod end from housing.
6) Remove front exhaust pipe.
7) Remove front transverse link from front crossmember.

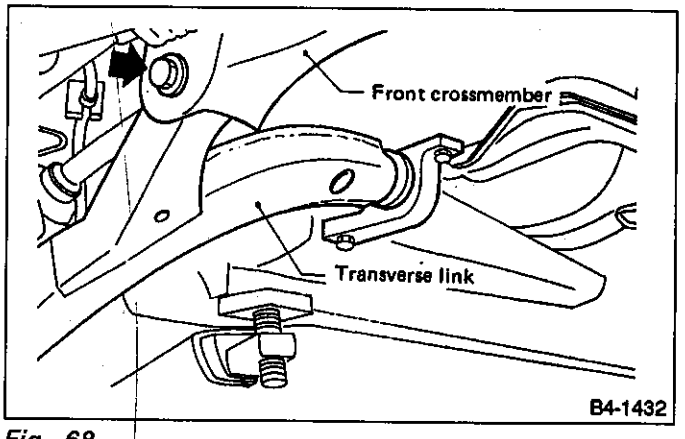

Fig. 68

8) Remove nuts attaching engine mount cushion rubber to crossmember.
9) Remove self-lock nuts connecting steering U/J ASSY and pinion shaft.
10) Lift engine ASSY by approx. 10 mm (0.39 in) by using chain block.
11) Remove crossmember installing nuts with crossmember supported by jack, and lower crossmember gradually along with steering gearbox.

When removing crossmember downward, be careful that tie-rod end does not interfere with DOJ boot.

B: INSTALLATION

Installation is in the reverse order of removal procedures.

a. Always tighten transverse link and stabilizer when wheels are in full contact with the ground and vehicle is curb weight.

b. Tightening torque

Transverse link bushing to crossmember:
83 — 113 N•m (8.5 — 11.5 kg-m, 61 — 83 ft-lb)
Stabilizer to bush:
21 — 28 N•m (2.1 — 2.9 kg-m, 15 — 21 ft-lb)
Tie-rod end to housing:
25 — 29 N•m (2.5 — 3.0 kg-m, 18 — 22 ft-lb)
Front cushion rubber to crossmember:
54 — 83 N•m (5.5 — 8.5 kg-m, 40 — 61 ft-lb)
Universal joint ASSY to pinion shaft:
21 — 26 N•m (2.1 — 2.7 kg-m, 15 — 20 ft-lb)
Crossmember to body:
83 — 113 N•m (8.5 — 11.5 kg-m, 61 — 83 ft-lb)

c. Purge air from system on power steering models.

7. Rear Trailing Link Assembly

A: REMOVAL

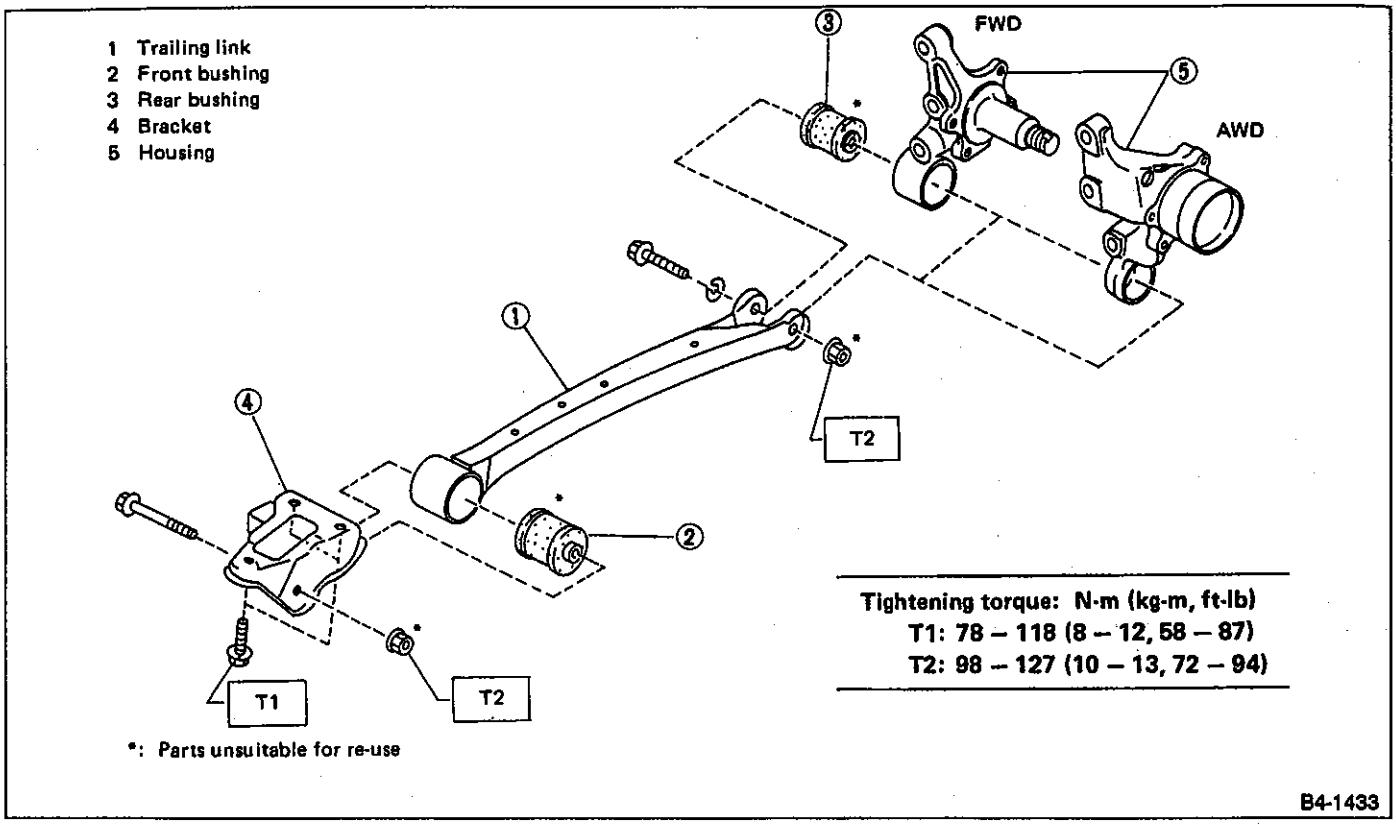

Fig. 69

1) Loosen rear wheel nuts.
2) Jack up vehicle, support it with safety stands (rigid racks) and remove rear wheels.
3) Remove both rear parking brake clamp and ABS sensor. (only vehicle equipped with ABS)
4) Remove bolts which secure trailing link ASSY to body.

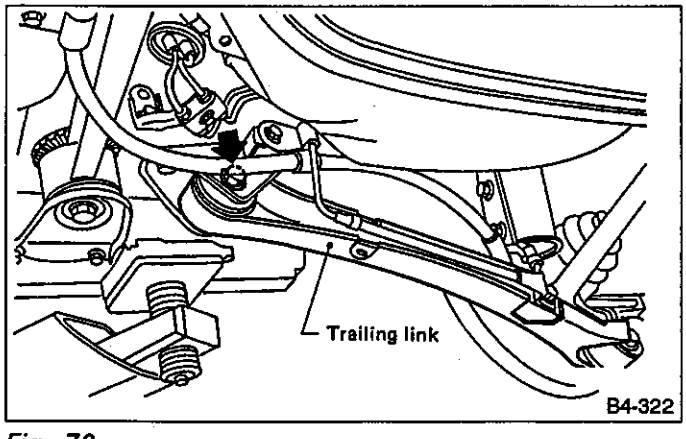

Fig. 70

5) Remove bolts which secure trailing link ASSY to rear housing.

B: DISASSEMBLY

1. FRONT BUSH

Using an INSTALLER & REMOVER SET (927720000), press front bushing out of place.

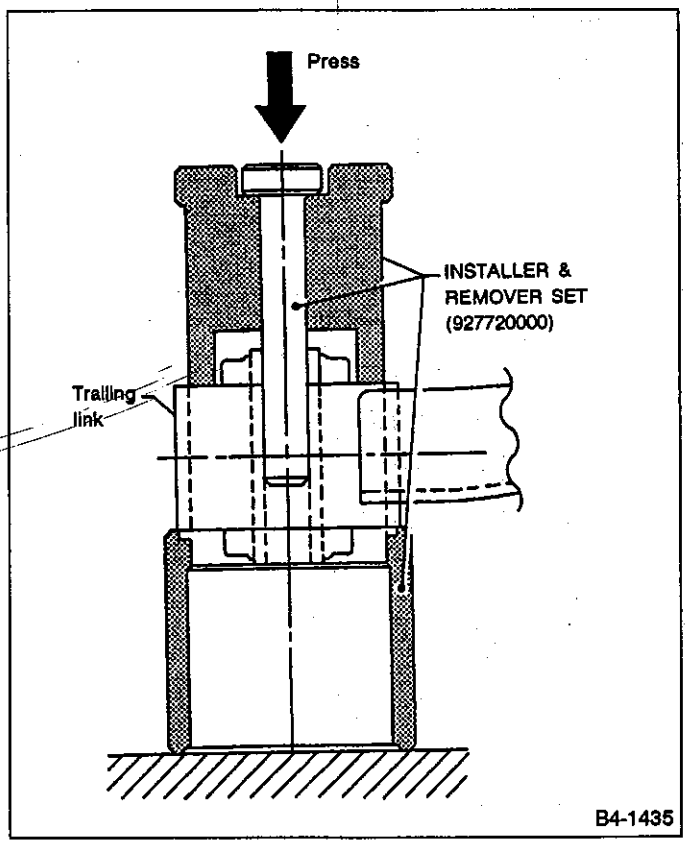

Fig. 71

2. REAR BUSH

1) Remove housing. Refer to "4-2. WHEELS AND AXLES" for removal procedures.
2) Using an INSTALLER & REMOVER SET (927730000), press rear bushing out of place.

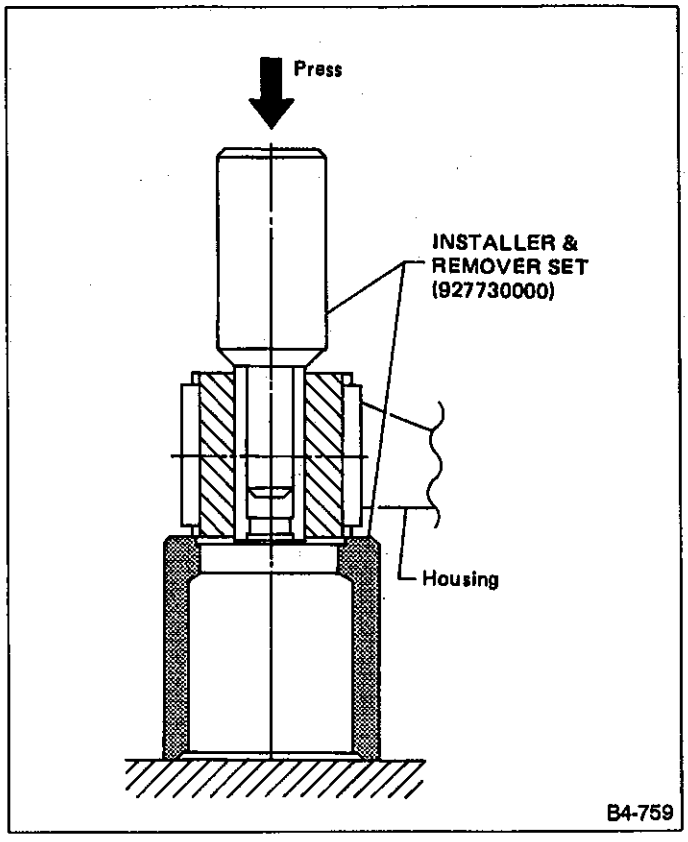

Fig. 72

C: INSPECTION

Check trailing links for bends, corrosion or damage.

D: ASSEMBLY

To assemble, reverse above disassembly procedures.
Discard old bushings and replace with new ones.

1. FRONT BUSH

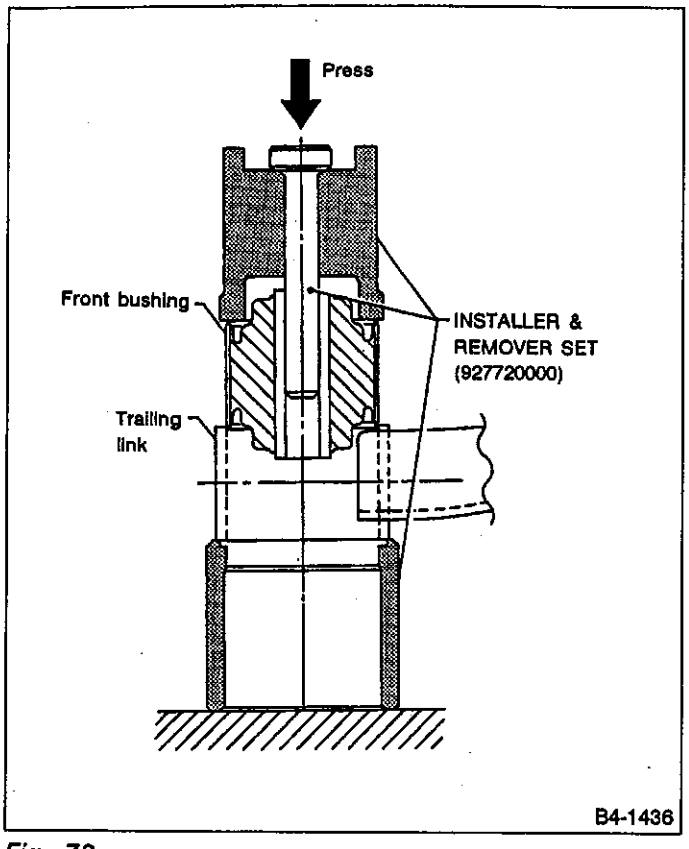

Fig. 73

Install front bushing in the proper direction, as shown in Figure 74.

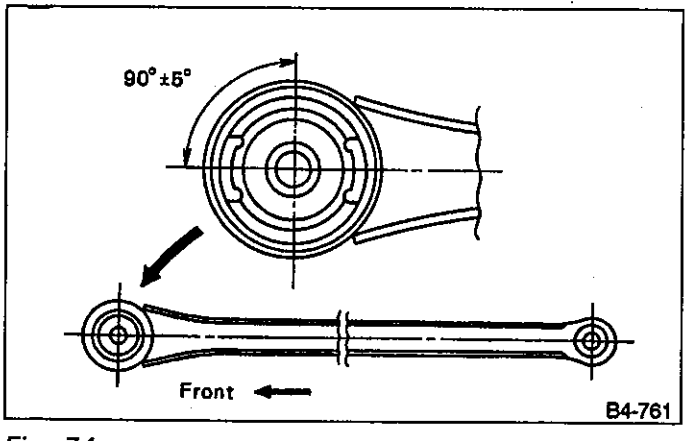

Fig. 74

2. REAR BUSH

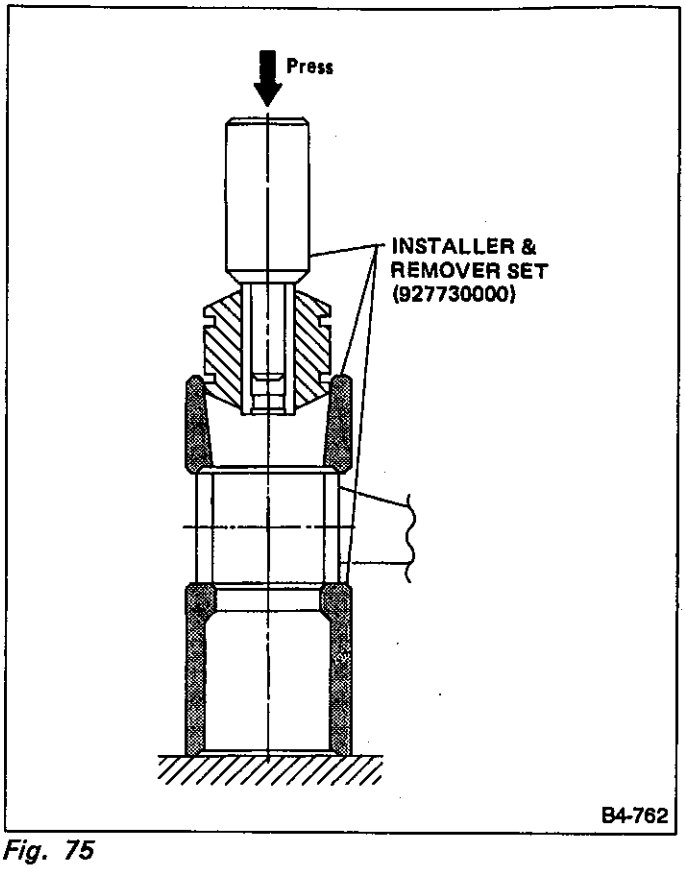

Fig. 75

E: INSTALLATION

Installation is in the reverse order of removal.

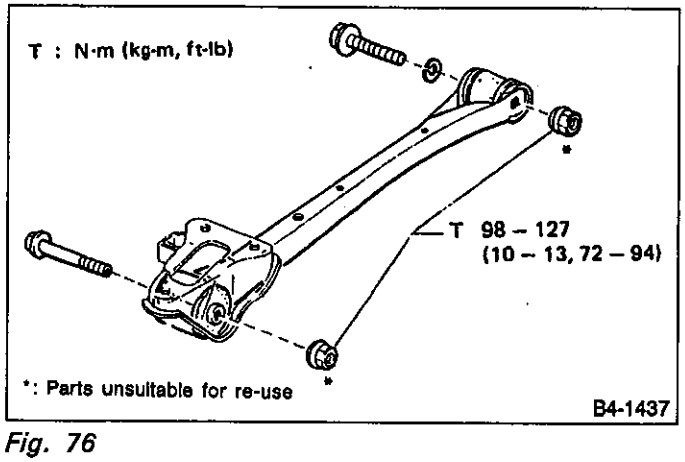

Fig. 76

Always tighten rubber bushing location when vehicle is empty.

8. Lateral Link Assembly

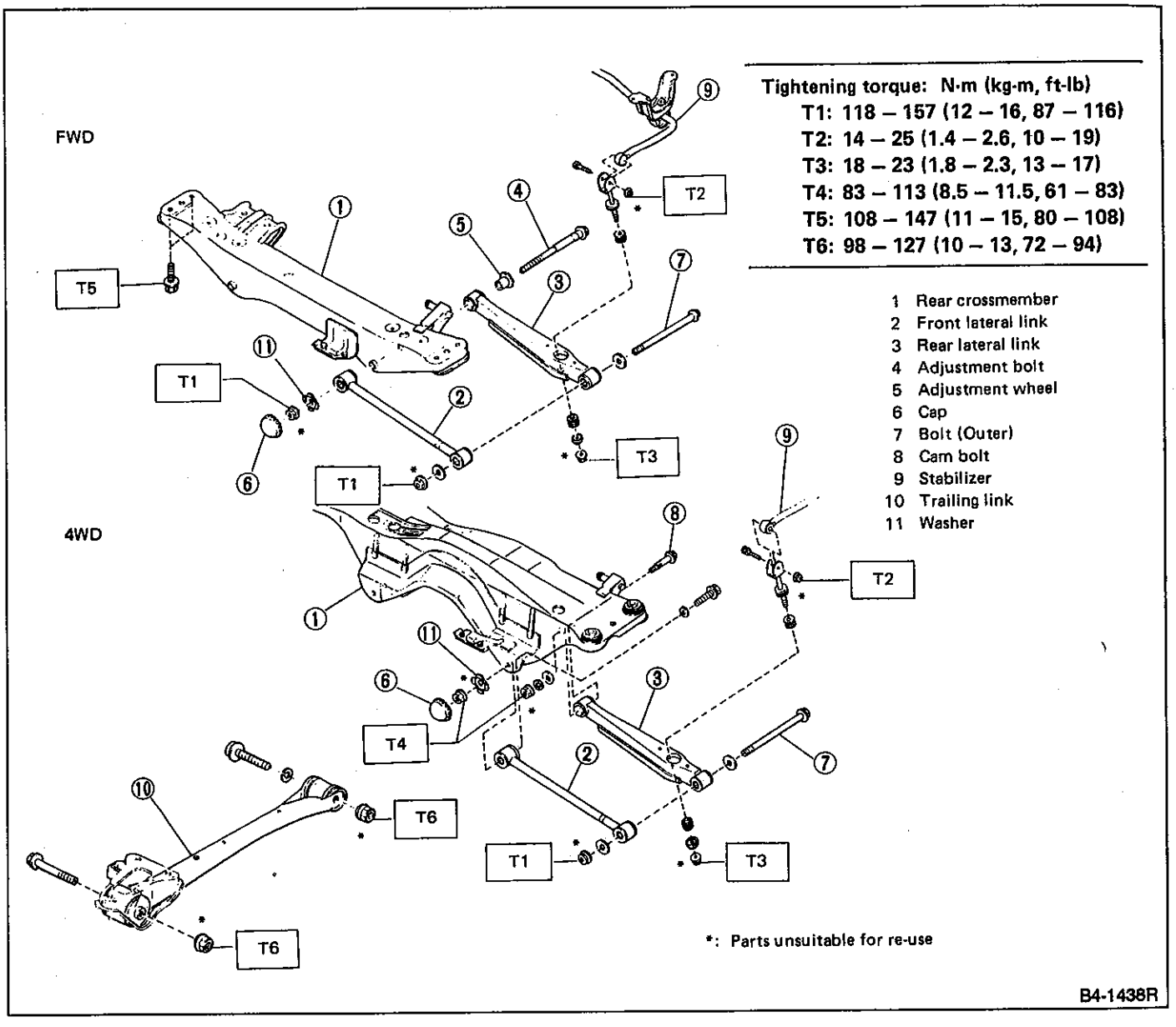

Fig. 77

A: REMOVAL

1. FWD MODEL

1) Remove rear exhaust pipe and muffler.
2) Remove stabilizer from rear lateral link.
3) Scribe an alignment mark on adjustment bolt, adjustment wheel and crossmember.
4) Remove outer lateral link bolt from housing.
5) Turn cap until it contacts stopper, then remove cap.
6) While holding adjustment bolt head with a wrench, loosen self-locking nut.

Always loosen self-locking nut when loosening adjustment bolt.

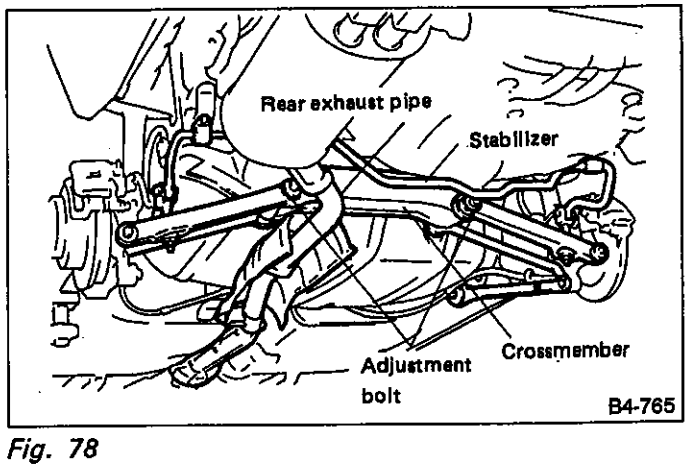

Fig. 78

7) Lateral link removal

(1) Left lateral links

Remove adjustment bolts and front and rear lateral links.

(2) Right lateral links

Remove two bolts securing crossmember to car body. Remove adjustment bolts and front and rear lateral links.

2. 4WD MODEL

1) Loosen wheel nuts. Jack up vehicle and remove wheel.
2) Straighten lock plates and remove axle nuts.
3) Remove stabilizers.
4) (Models equipped with ABS)
Remove ABS sensor.
5) Remove both trailing link bracket and loosen (do not remove!) trailing link bolts.
6) Remove bolts securing trailing link to housing.

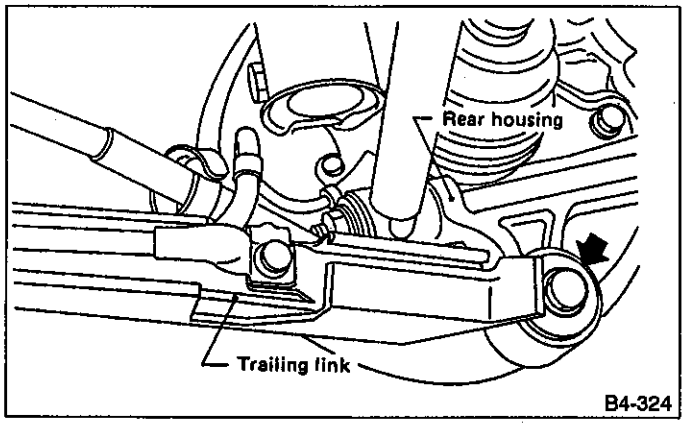

Fig. 79

7) Remove DOJ pin and detach shaft.
8) Scribe an alignment mark on rear lateral link adjustment bolt and crossmember.
9) Remove outer lateral link bolt on housing side.
10) Remove bolts securing front and rear lateral links to crossmember, detach lateral links.

To loosen adjustment bolt, always loosen nut while holding the head of adjustment bolt.

B: DISASSEMBLY

Using an INSTALLER & REMOVER, press bushing out of place.

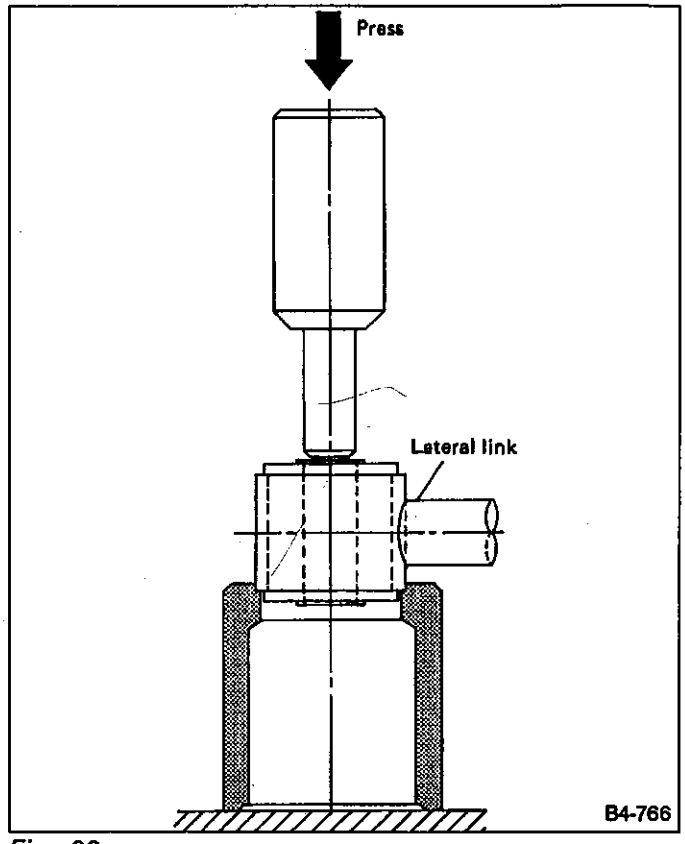

Fig. 80

a. Using the following figure as a guide, verify the type of bushings.

b. Select INSTALLER & REMOVER according to the type of bushings used.

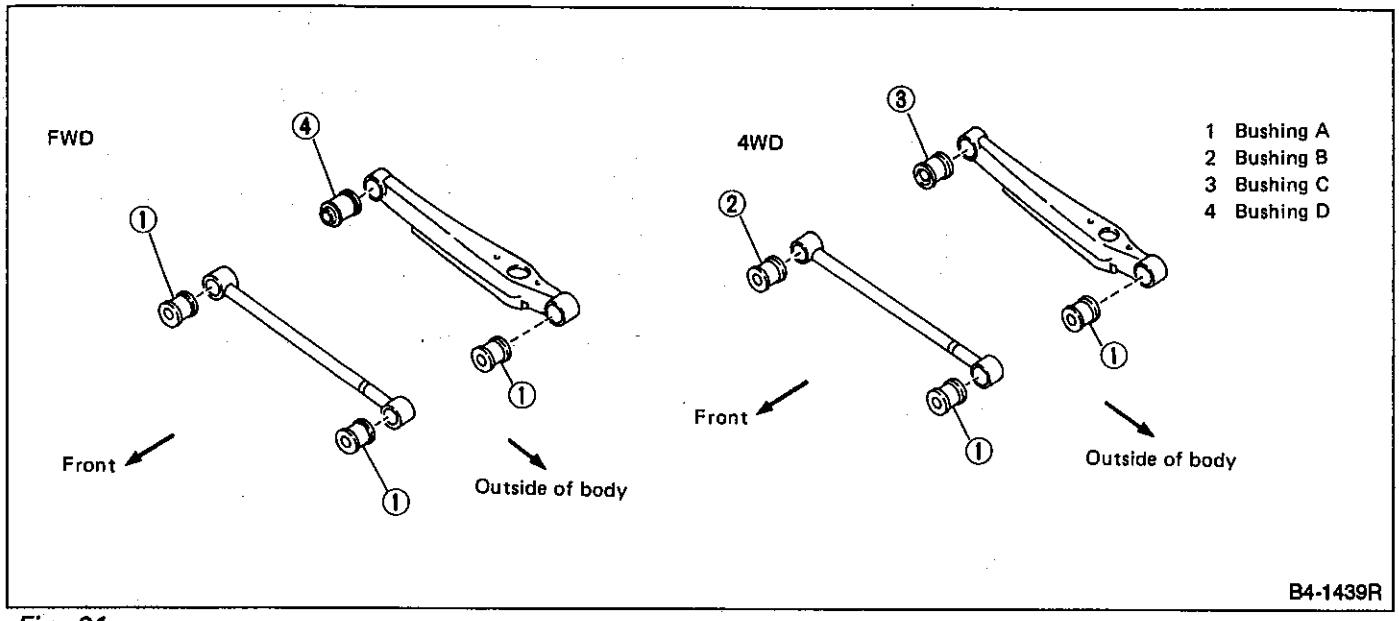

Fig. 81

Bushing	INSTALLER & REMOVER SET
Bushing A	927700000
Bushing B	927690000
Bushing C	927700000
Bushing D	927710000

C: INSPECTION

Visually check lateral links for damage or bends.

D: ASSEMBLY

Using an INSTALLER & REMOVER, press bushing into place.

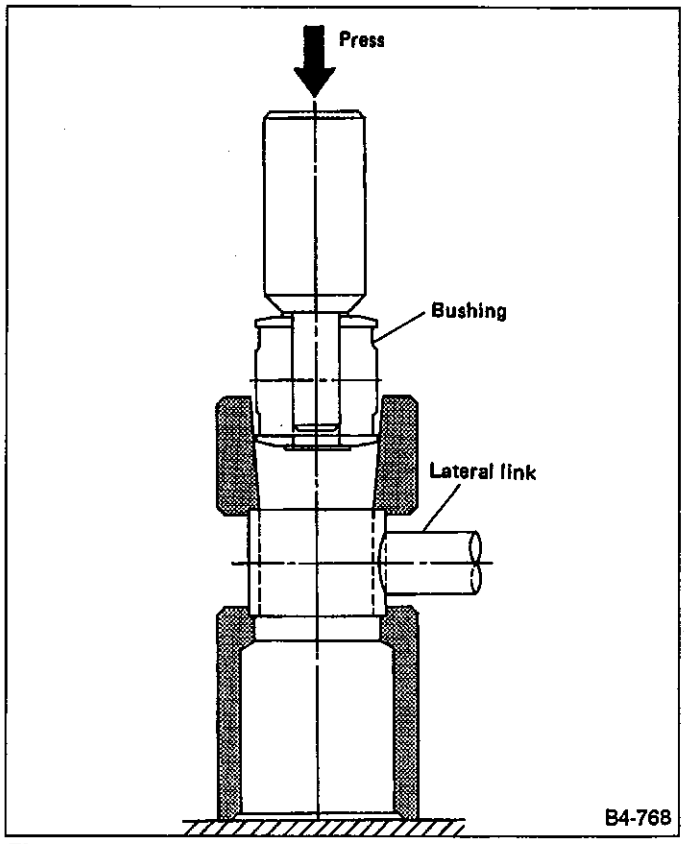

Fig. 82

a. Discard old bushing and replace with a new one.

b. Pay attention to the direction of bushing "D" as shown in figure 83.

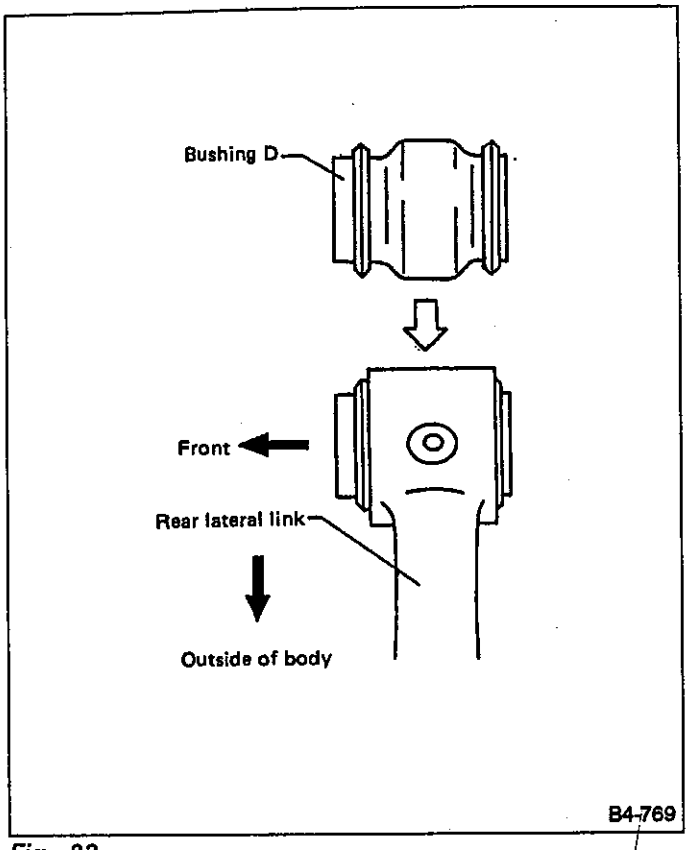

Fig. 83

E: INSTALLATION

To install, reverse removal procedures, observing the following instructions.

a. Before tightening bushing, check that vehicle is empty.

b. Tighten nut when installing adjustment bolt.

c. Lateral link washers for FWD and 4WD models can be identified by colors, as follows:

Olive (FWD model)
Gold (4WD model)

d. Replace self-locking nut and DOJ pin with new ones.

9. Rear Strut Assembly

A: REMOVAL

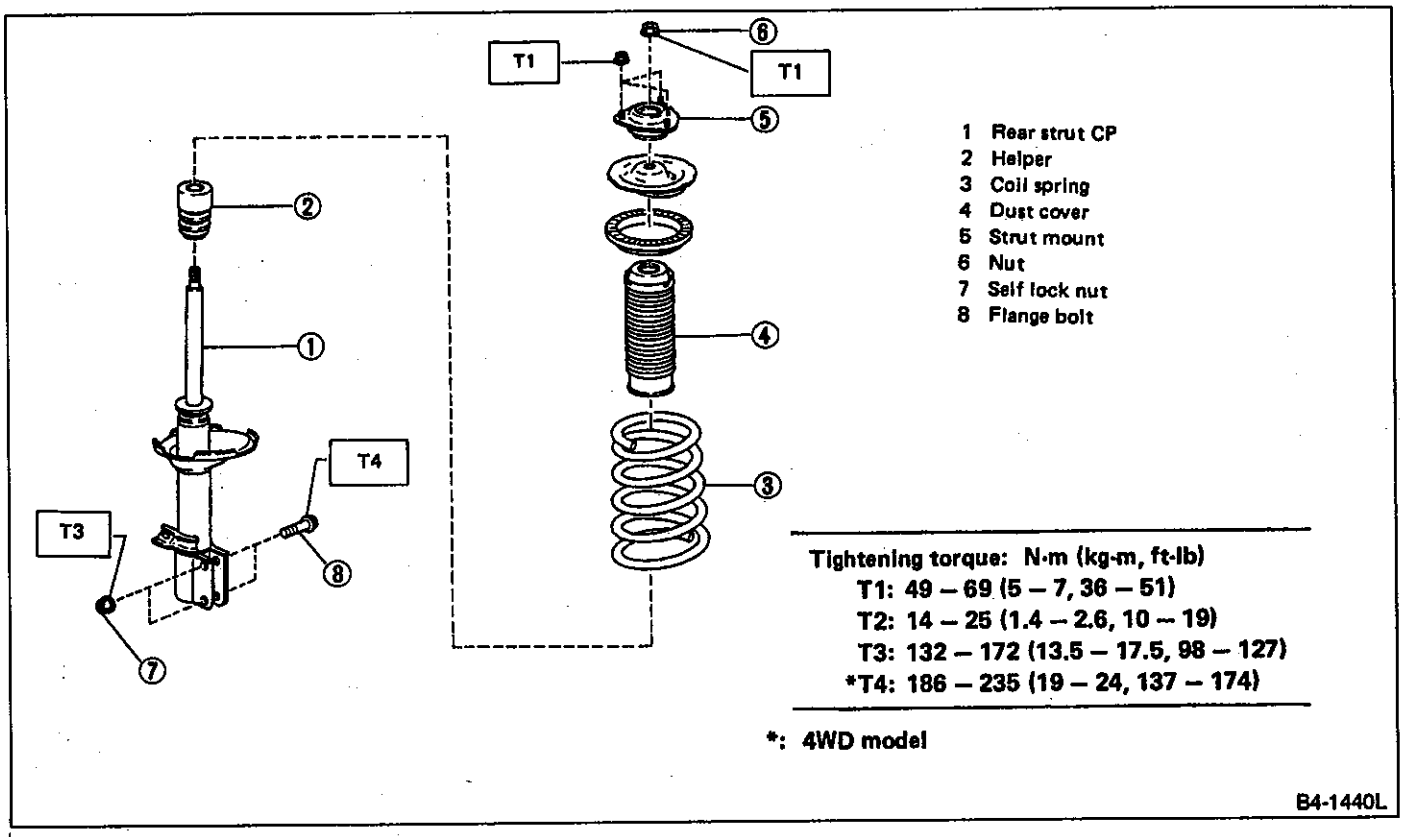

Fig. 84

1) Disconnect ground cable from battery.
2) Depress brake pedal and secure it in that position using a wooden block, etc.
3) (Sedan)
Remove rear seat cushion and backrest.

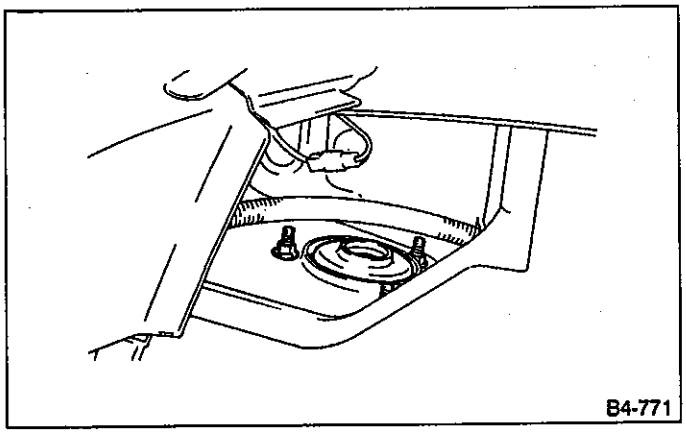

Fig. 85 Sedan

(Wagon)
Remove rear speaker grille.

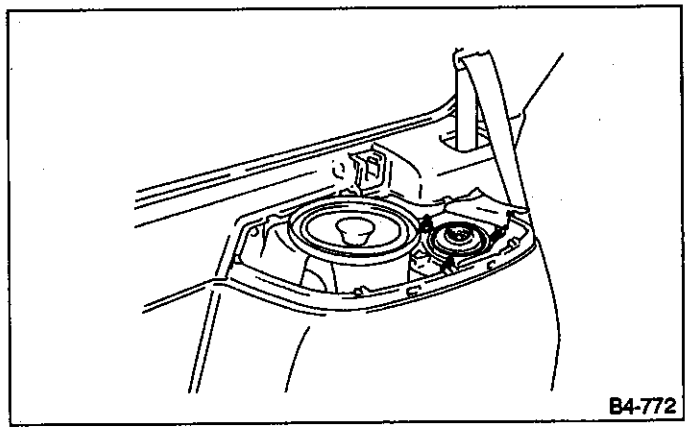

Fig. 86 Wagon

4) Loosen rear wheel nuts.
5) Jack up vehicle, support it with safety stands (rigid racks) and remove rear wheels.
6) Remove brake hose clip.
7) (Model equipped with rear disc brakes)
Remove union bolt from brake caliper.

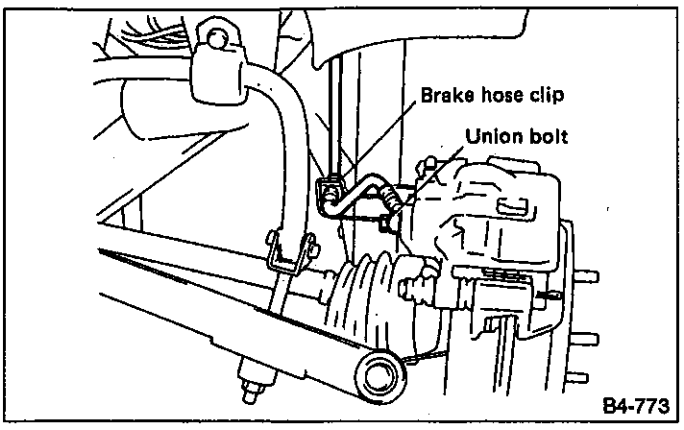

Fig. 87

(Model equipped with rear drum brakes)
Disconnect brake hose from brake pipe on brake cylinder side.

8) Remove bolts which secure rear strut ASSY to housing.

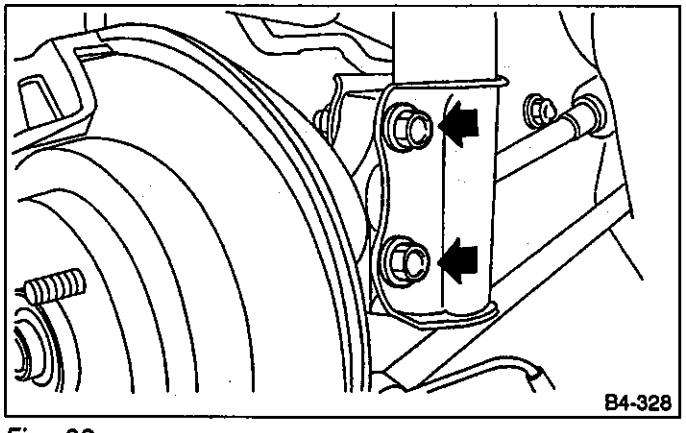

Fig. 88

9) Remove upper mount from rear strut.

B: DISASSEMBLY

For disassembly of rear strut ASSY, refer to procedures outlined under front strut ASSY as a guide.

C: INSPECTION

Refer to Front Strut ASSY as a guide for inspection procedures.

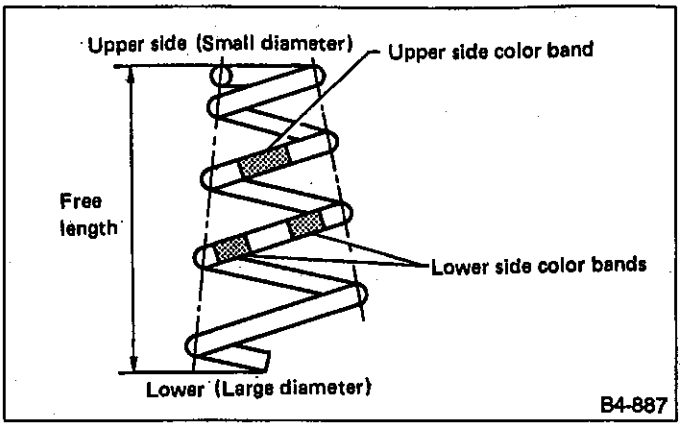

Fig. 89

D: ASSEMBLY

Refer to Front Strut ASSY as a guide for assembly procedures.

Install rear strut ASSY with "FWD"or"4WD" mark on strut mount facing outside of car body.

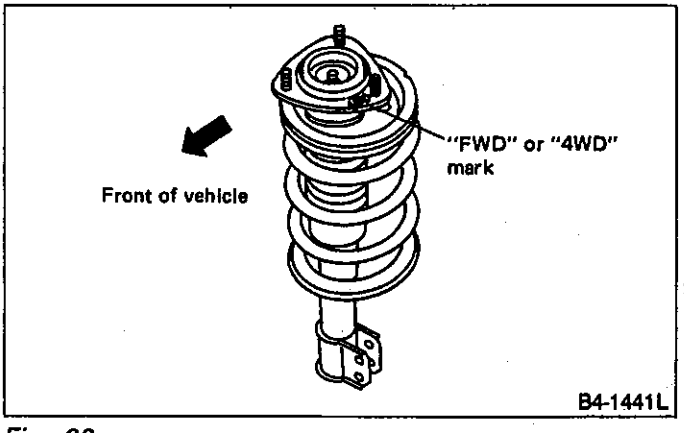

Fig. 90

E: INSTALLATION

1) Tighten self-locking nut used to secure strut ASSY to car body.

Discard old self-locking nut, and replace with a new one.

Tightening torque:
14 — 25 N•m (1.4 — 2.6 kg-m, 10 — 19 ft-lb)

2) Tighten bolts which secure rear strut ASSY to housing.

Tightening torque:
132 — 172 N•m (13.5 — 17.5 kg-m, 98 — 127 ft-lb)

Discard old self-locking nut, and replace with a new one.

3) (Model with rear disc brake)
Tighten brake hose union bolt on brake caliper.

Tightening torque:
15 — 21 N•m (1.5 — 2.1 kg-m, 11 — 15 ft-lb)

(Model with rear drum brakes)
Connect brake hose to brake pipe.

Tightening torque:
13 — 18 N•m (1.3 — 1.8 kg-m, 9 — 13 ft-lb)

4) Insert hose clip between brake hose and lower side of strut ASSY.

a. Check that hose clip is positioned properly.
b. Check brake hose for twisting, or excessive tension.
c. (Model equipped with ABS)
Do not subject ABS sensor harness to excessive tension.
d. Be sure to bleed air from brake system.

5) Lower vehicle and tighten wheel nut.

Tightening torque:
78 — 98 N•m (8 — 10 kg-m, 58 — 72 ft-lb)

6) (Sedan)
Install rear seat backrest and rear seat cushion.
(Wagon)
Install rear speaker grille.

7) Connect ground cable with negative terminal of battery.

10. Rear Crossmember (FWD)

A: REMOVAL

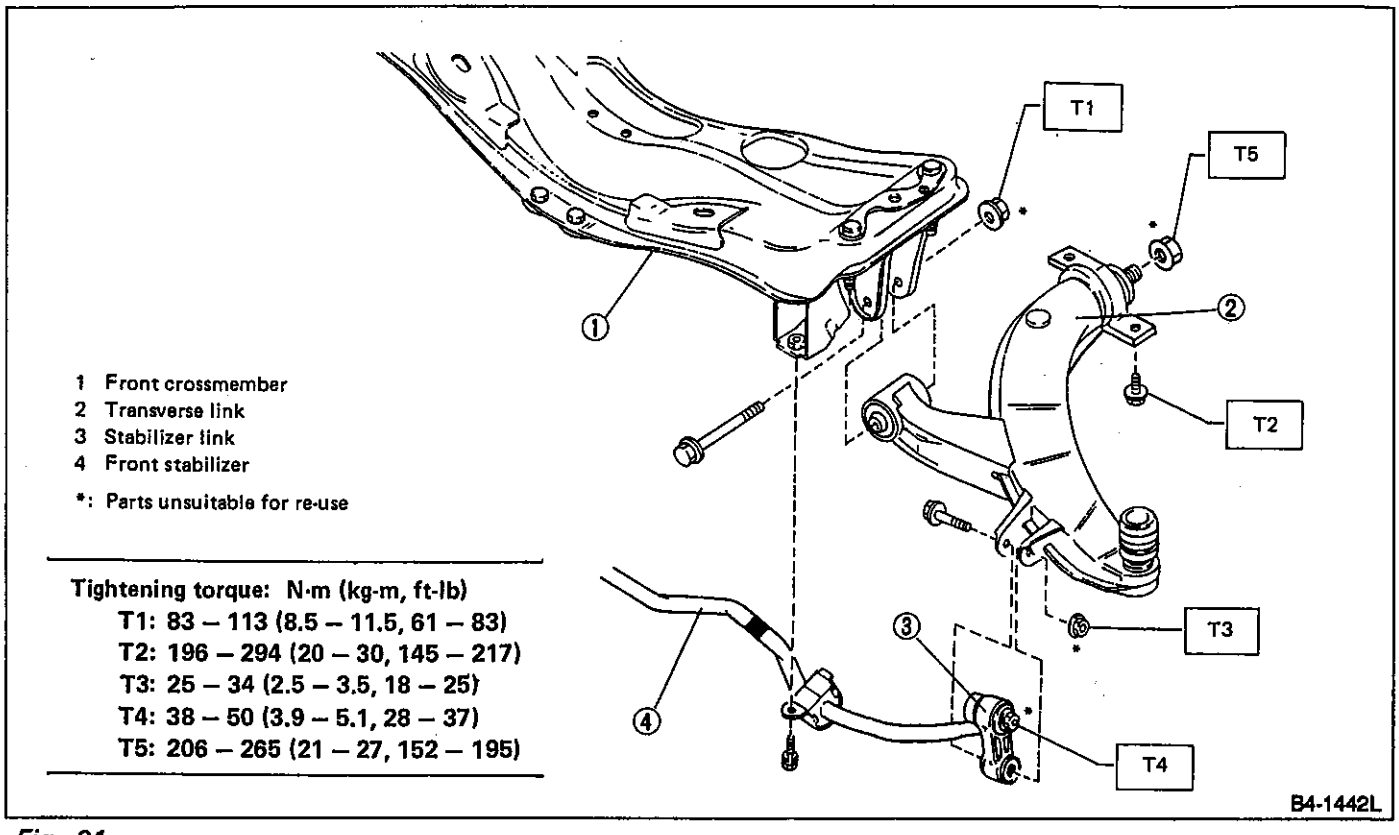

Fig. 91

1) Remove lateral link.
2) Remove rear exhaust pipe and muffler.
3) Remove heat-shield cover.

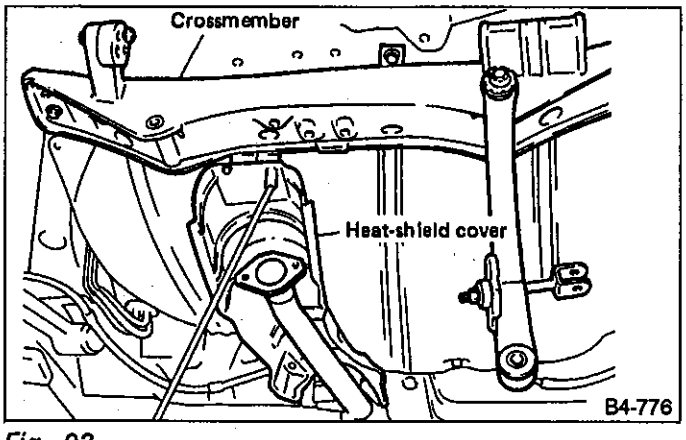

Fig. 92

4) Remove four bolts securing crossmember.

B: INSPECTION

Check removed parts for wear, damage and cracks, and correct or replace if defective.

C: INSTALLATION

Installation is in reverse order of removal procedure.

a. Discard old self-locking nut and replace with a new one.

b. Always tighten nut (not adjustment bolt), when tightening adjustment bolt.

c. Tighten lateral link located at rubber bushing when vehicle is empty.

11. Rear Crossmember (4WD)

A: REMOVAL

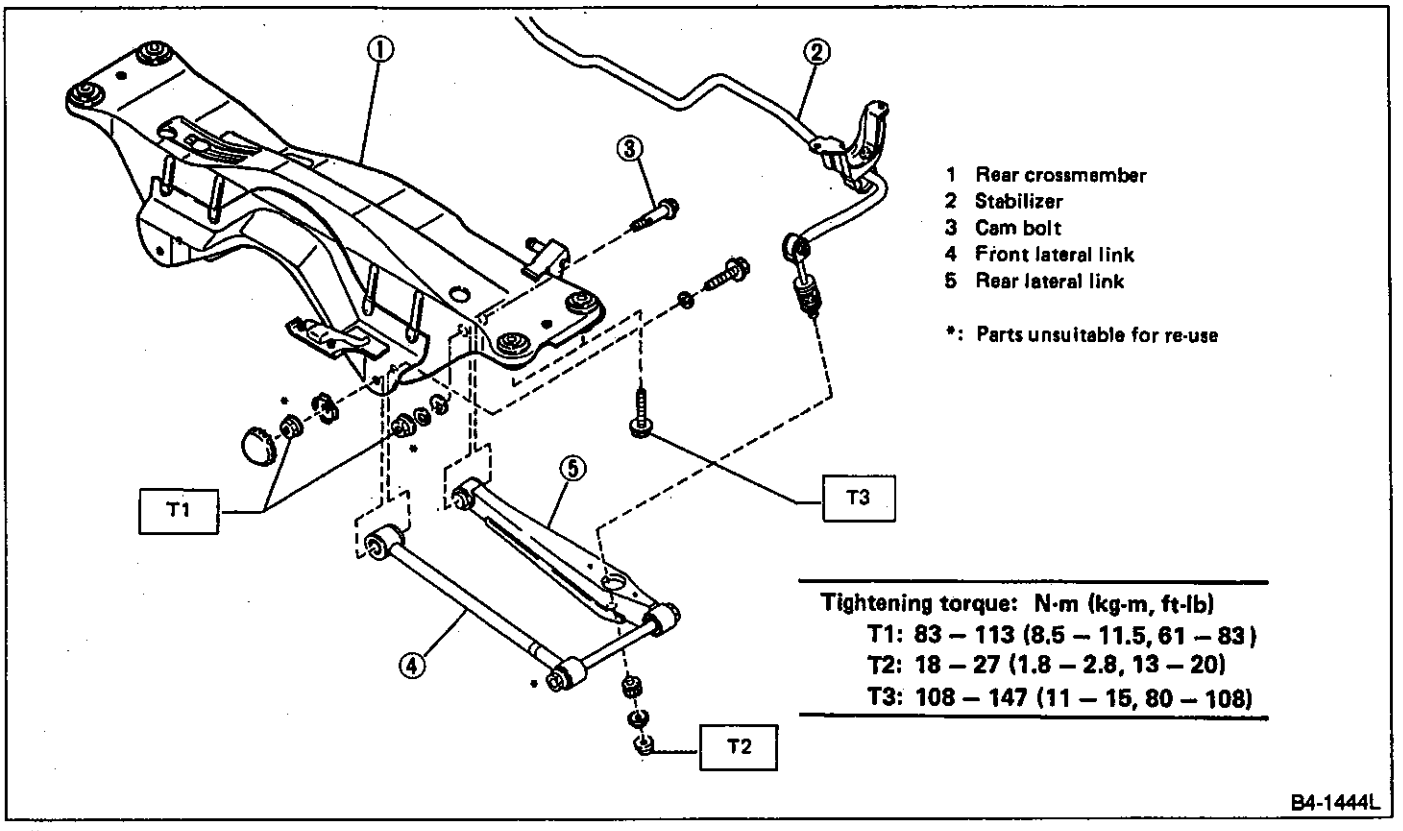

Fig. 93

Do not subject ABS sensor harness to excessive tension (if equipped).

1) Separate front exhaust pipe and rear exhaust pipe.
2) Remove rear exhaust pipe and muffler.
3) Remove front cover of rear differential mount.

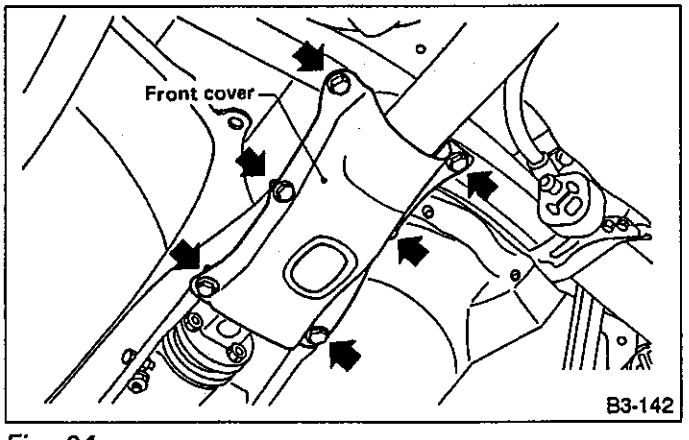

Fig. 94

4) Remove propeller shaft.
5) Remove heat-shielding cover.
6) Remove rear stabilizer (if so equipped).
7) Remove clamps and bracket of parking brake cable.

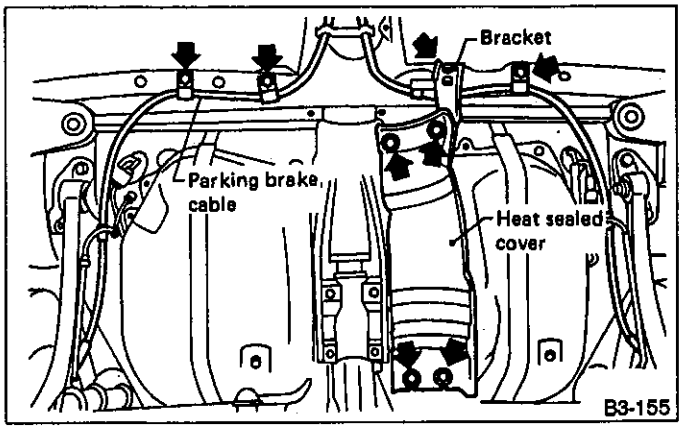

Fig. 95

8) Remove lower differential bracket.

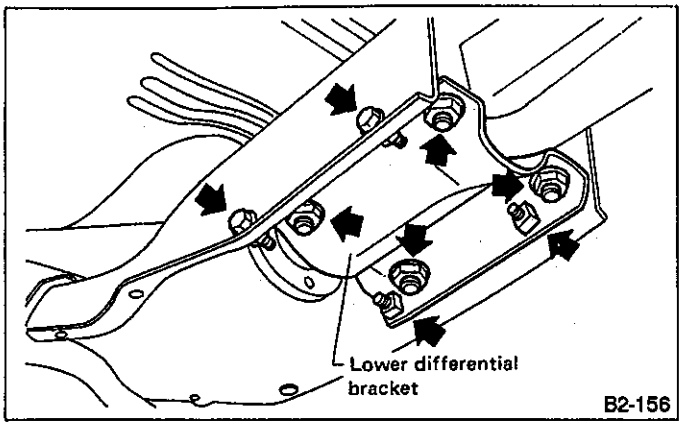

Fig. 96

9) Support rear differential with transmission jack.

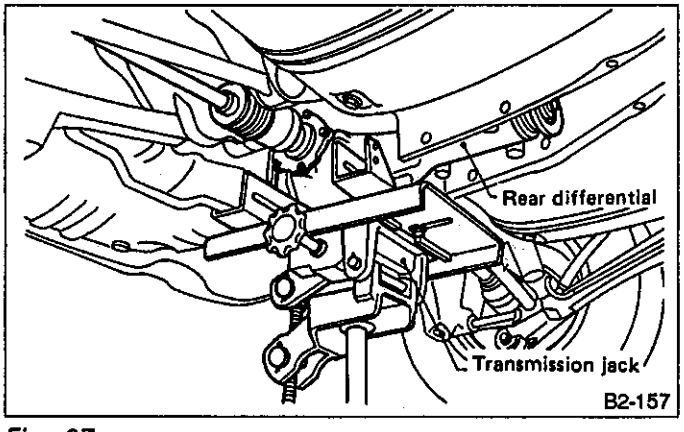

Fig. 97

10) Remove self-locking nuts connecting rear differential to rear member.

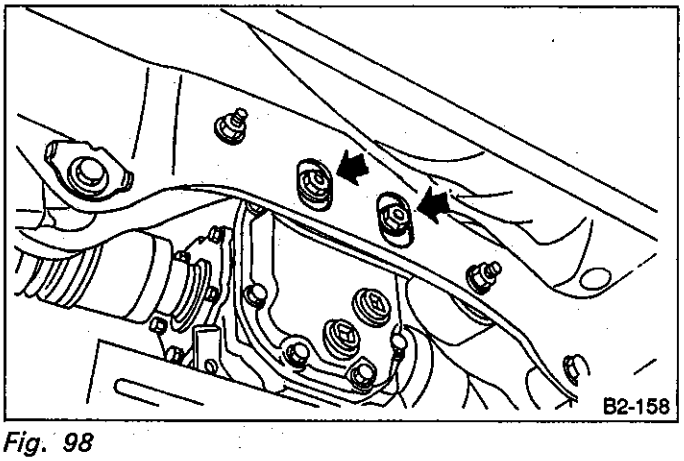

Fig. 98

11) Remove bolts which secure rear differential front member to body. Loosen bolt ① first, then remove bolts ②.

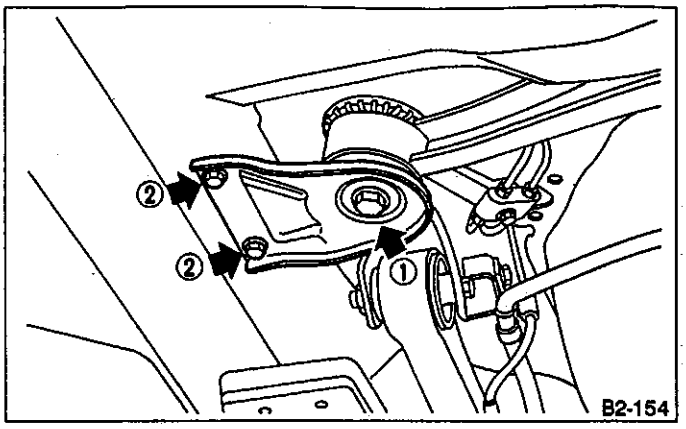

Fig. 99

12) While slowly lowering transmission jack, move rear differential forward and remove bolts from rear member.

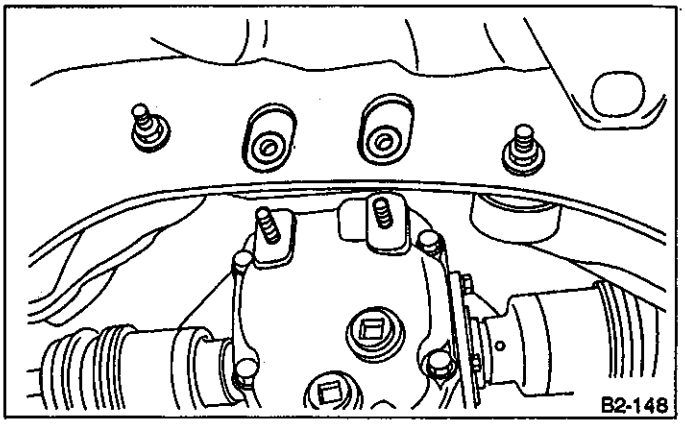

Fig. 100

13) Remove front member from body.

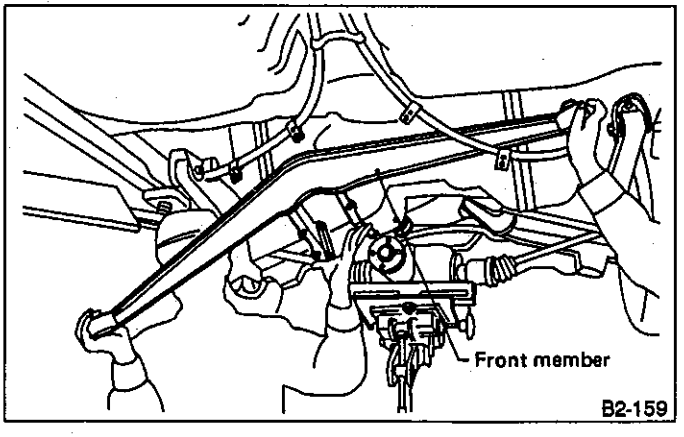

Fig. 101

14) Remove rear drive shaft from rear differential and suspend it in air.

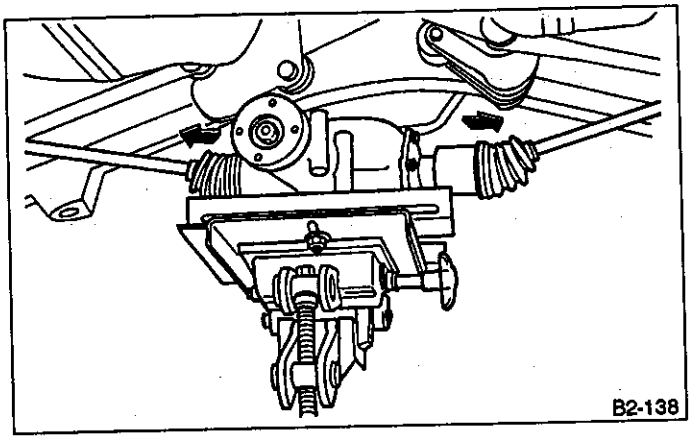

Fig. 102

15) Remove rear differential member from crossmember.
16) Scribe an alignment mark on rear lateral link cam bolt and crossmember.
17) Remove front and rear lateral links by loosening nuts.

Loosen nut to remove lateral link.

18) Remove bolts securing crossmember to car body, and remove crossmember.

B: INSPECTION

Check removed parts for wear, damage and cracks, and correct or replace if defective.

C: INSTALLATION

1) Install rear crossmember to body.

Tightening torque:
108 — 147 N•m (11 — 15 kg-m, 80 — 108 ft-lb)

2) Temporarily install front and rear lateral links on crossmember.
3) Install rear differential member on crossmember.
4) Temporarily install rear differential, front member and lower differential bracket.
5) Using a transmission jack, raise rear differential. Connect drive shaft to rear differential.

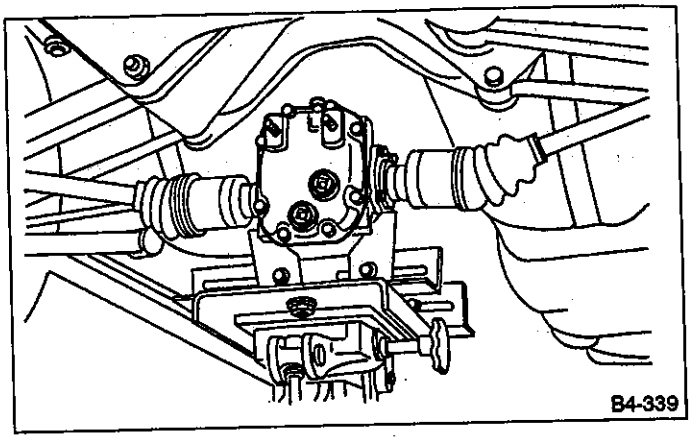

Fig. 103

6) Install rear differential on rear differential member.

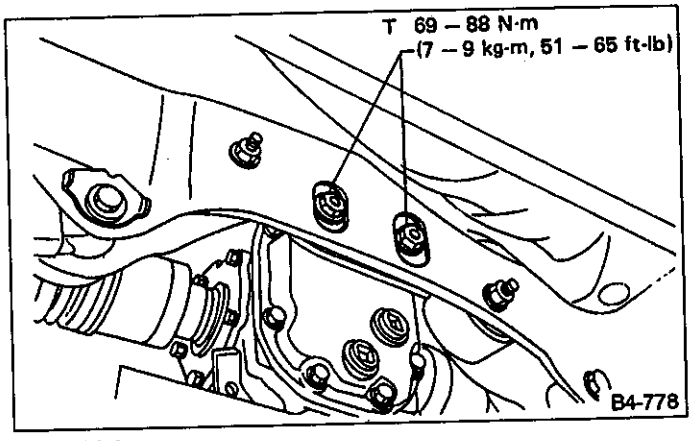

Fig. 104

7) Tighten front member bolts as outlined below:
   (1) Temporarily tighten bolt ①.
   (2) Tighten bolt ②.
   (3) Tighten bolt ①.

Tightening torque:
Bolt ①:
88 — 108 N•m (9 — 11 kg-m, 65 — 80 ft-lb)
Bolt ②:
25 — 40 N•m (2.5 — 4.1 kg-m, 18 — 30 ft-lb)

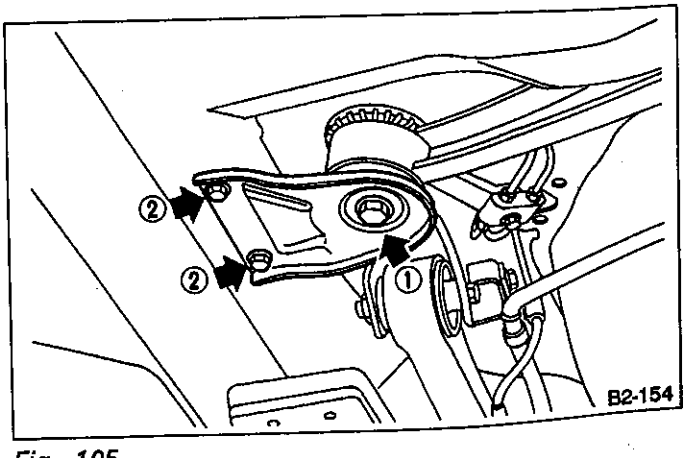

Fig. 105

8) Install parking brake cable clamps and bracket.
9) Tighten rear differential, front member and lower differential bracket securely.
10) Drive spring pin into DOJ.

Discard old spring pin and replace with a new one.

11) (Model equipped with stabilizer)
Temporarily install stabilizer.
12) Install heat-shield cover.
13) Install propeller shaft.
14) Install front cover of rear differential.

Tightening torque:
59 — 78 N•m (6.0 — 8.0 kg-m, 43 — 58 ft-lb)

15) Install exhaust pipe and muffler.
16) Lift down car body from lift and ensure that vehicle is empty.
Tighten front and rear lateral links and stabilizer securely with specified torque.

X SERVICE PROCEDURE FOR AIR (PNEUMATIC) SUSPENSION WITH HEIGHT CONTROL

In this section are described the different points of the air (pneumatic) suspension from the explanations described in the section of conventional suspension. Accordingly, use this section together with the section of conventional suspension.

1. General Precautions

1) Be sure to return the height control to "Normal" position (low) and support the vehicle with a jack before getting under it for servicing. Make sure that the car is in the "Normal" (low) position with height control switch turned off and indicator light off. To check any system, other than electrical, under the vehicle, disconnect cables from battery in advance. This prevents the auto leveler from being activated to take up increase or decrease in wheel reaction while the ignition switch is ON.
2) When reassembling, do not reuse O-rings. Also be sure not to damage O-ring and O-ring contact surfaces such as O-ring groove. Apply grease to O-rings when reassembling.

Recommended grease and O-ring:
Grease NOK SEALUB S-4
O-ring NOK Material A980

3) Do not apply an undercoating for local rust prevention to the air bags (rolling diaphragm surface and cylinder surface with which the diaphragm is in rolling contact) and the air compressor.
This is because, when the damper oil temperature increases due to running on rough roads, the generated heat melts the undercoating, which makes it easier to trap dust, dirt, and sand on the surface, resulting in damaged diaphragm. The undercoating on the air inlet of the compressor can also block the vent.
4) When welding vehicle body, be sure to cover air pipe and air spring diaphragm so that welding sputter will not attach to these parts.
5) When replenishing battery electrolyte, be careful not to have electrolyte come in contact with air pipe.
6) At transportation, retighten the ratchet another 2-3 notches with tie-down wire tightened up. (Retightening of one notch is recommended for the all models of conventional coil springs.)
The tighter tension is recommended because of its lower spring constant as compared with that of the coil spring.

2. Front Air Suspension Strut Assembly

A: REMOVAL

1) Disconnect air pipe.

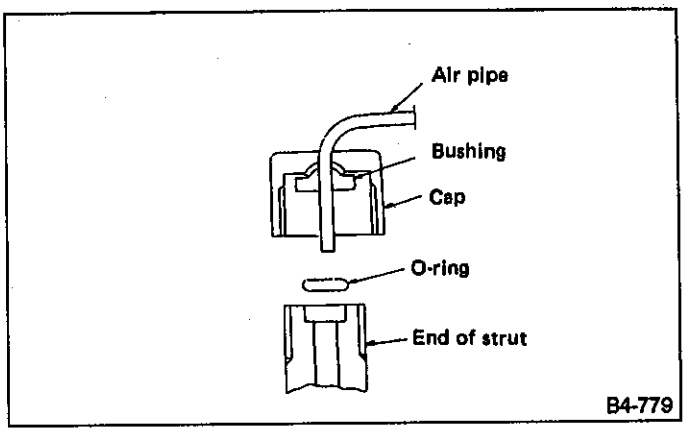

Fig. 106

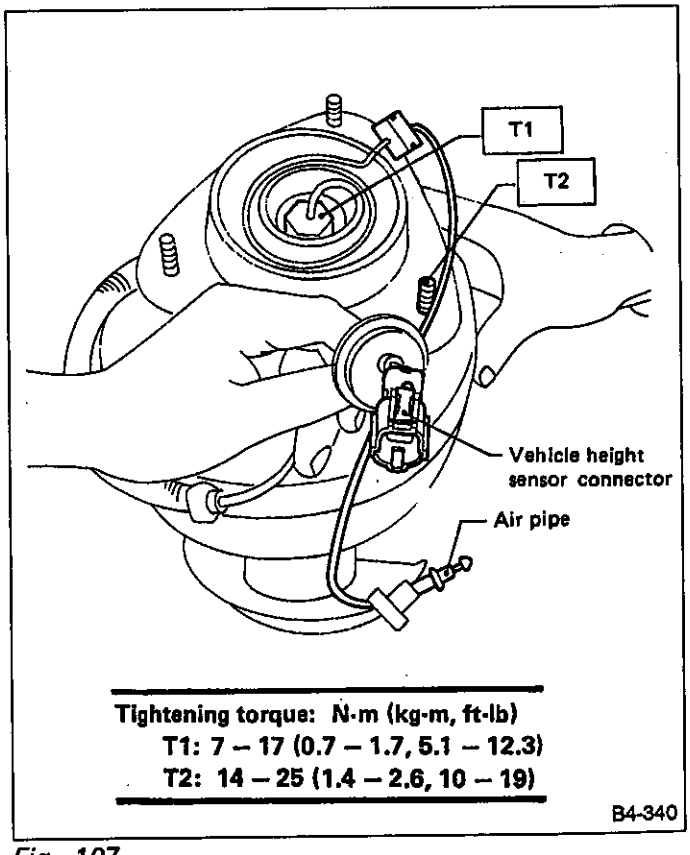

Fig. 107

2) Remove two bolts securing front solenoid valve, and disconnect vehicle height sensor harness connector. Remove harness connector from solenoid valve bracket.
3) Remove wheels.
4) Push vehicle height sensor harness to transfer it to wheelhouse.
For subsequent removal procedures, refer to "Removal of Conventional Front Suspension Strut Assembly".

B: DISASSEMBLY

Strut mount can be removed from air suspension CP, using SPANNER (927750000).

Disassembling air suspension CP is not allowed.

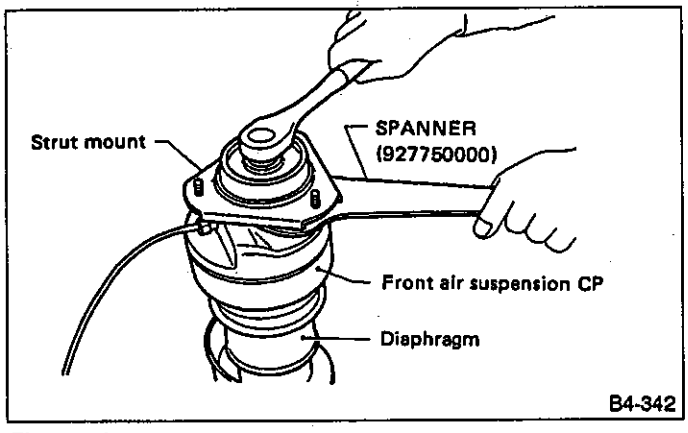

Fig. 108

a. Before removing strut mount, make sure that air has been discharged from air spring.
b. Be careful not to damage diaphragm.

C: INSPECTION

1) Charge strut ASSY with air.
2) Apply SUBARU CRC5-56 (004301003) to areas (shown by arrows in Figure 109) to check for air leaks.

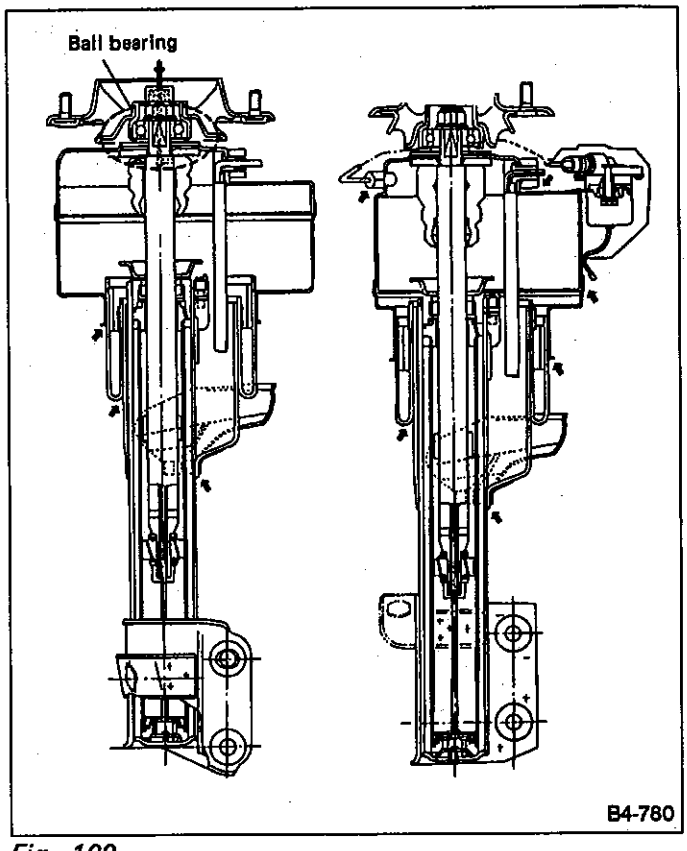

Fig. 109

3) After checking for air leaks, remove soapy water using dry compressed air.

4) Before disposing of strut ASSY, drill a 2 to 3 mm (0.08 to 0.12 in) hole on portion (shown by arrow in Figure 110) to completely discharge filled gas.

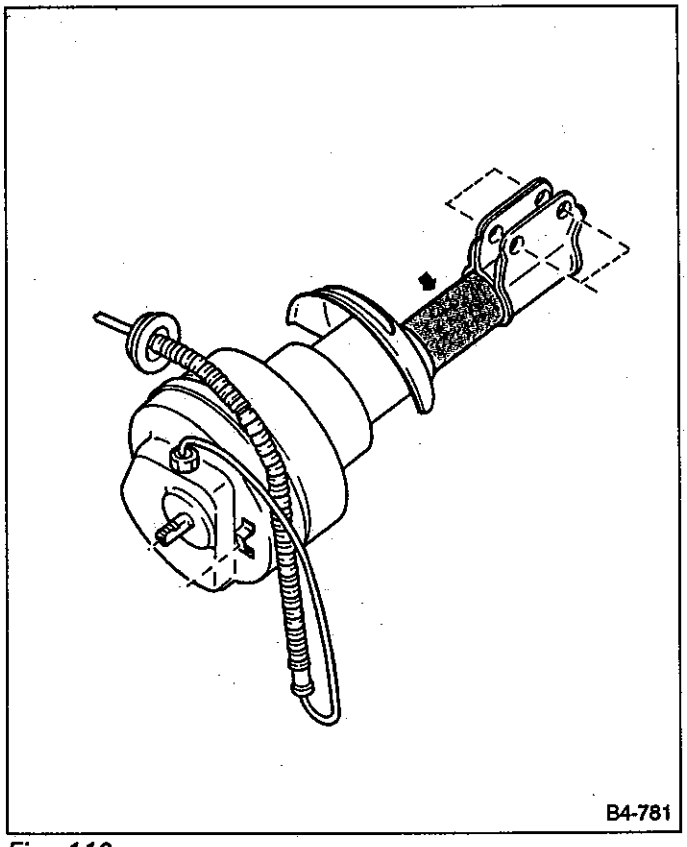

Fig. 110

Cover strut ASSY with a vinyl bag while drilling to trap metal chips while drilling.

D: ASSEMBLY

1) Using SPANNER (927750000), install strut mount to front air suspension CP.

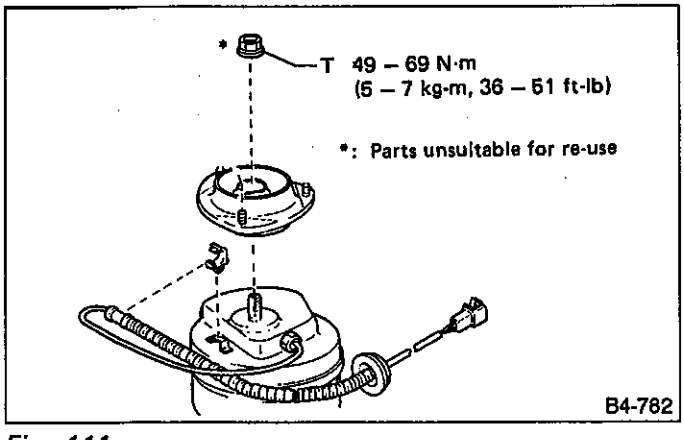

Fig. 111

E: INSTALLATION

1) Using standard strut installation procedures as a guide, install front strut ASSY to car body.
2) Transfer vehicle height sensor harness to engine compartment, install grommet on strut tower to secure sensor harness.
3) Connector sensor harness connectors and install front solenoid valve.
4) Position O-ring in end of strut rod, and insert air pipe into O-ring before connecting pipes.

a. Insert air pipe "ℓ" at least 13 mm (0.51 in) as shown in Figure 112.

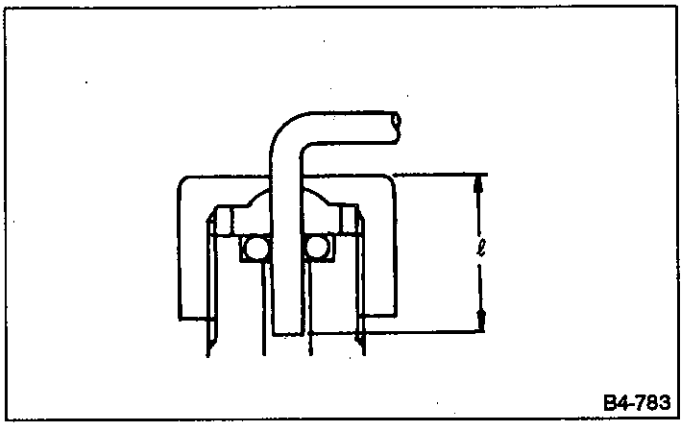

Fig. 112

b. Apply grease to O-ring, being careful not to allow foreign particles to come in contact with O-ring and mating surface.
c. Use a new O-ring and self-locking nut.
d. Check that air pipe faces center of vehicle as shown in Figure 113.

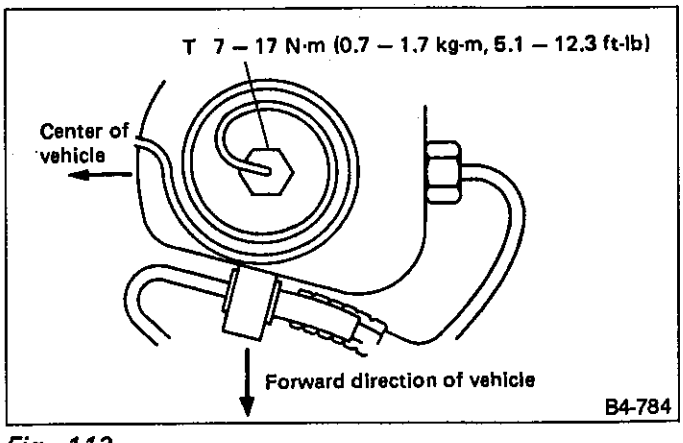

Fig. 113

3. Rear Air Suspension Strut Assembly

A: REMOVAL

1) Remove rear seat (including cushion and backrest).
2) Remove tonneau cover.
3) Remove speaker grille.
4) Remove rear quarter trim.
5) Disconnect vehicle height sensor connector from solenoid valve connector.
6) Using an AIR PIPE REMOVER (926520000), unbend collet pawls and disconnect air pipe.

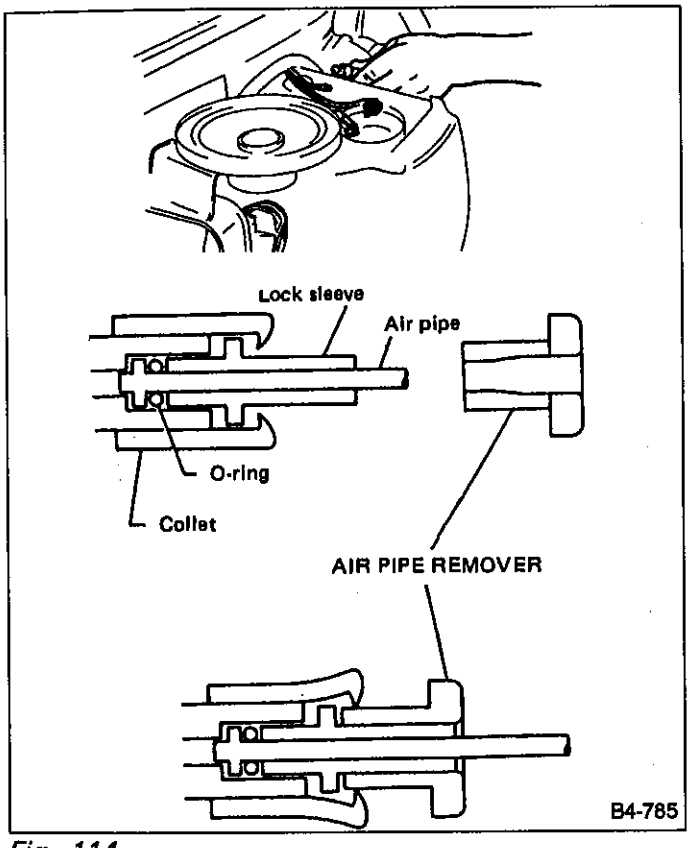

Fig. 114

7) Transfer rear grommet to wheelhouse by pushing it. For subsequent removal procedures, refer to "Standard Strut ASSY Removal".

a. Be careful not to damage harness, pipe, etc. when transferring to wheelhouse.
b. Also be careful not to scratch diaphragm.

B: DISASSEMBLY, INSPECTION AND ASSEMBLY

Refer to "Front Strut ASSY" for disassembly, inspection and reassembly procedures.

C: INSTALLATION

To install, reverse removal procedures.

a. Discard old O-ring and self-locking nut and replace with new ones.
b. Be careful not to scratch mating surfaces of O-ring and part.
c. Apply grease to O-ring, being careful not to allow foreign particles to come in contact with mating surfaces of O-ring.

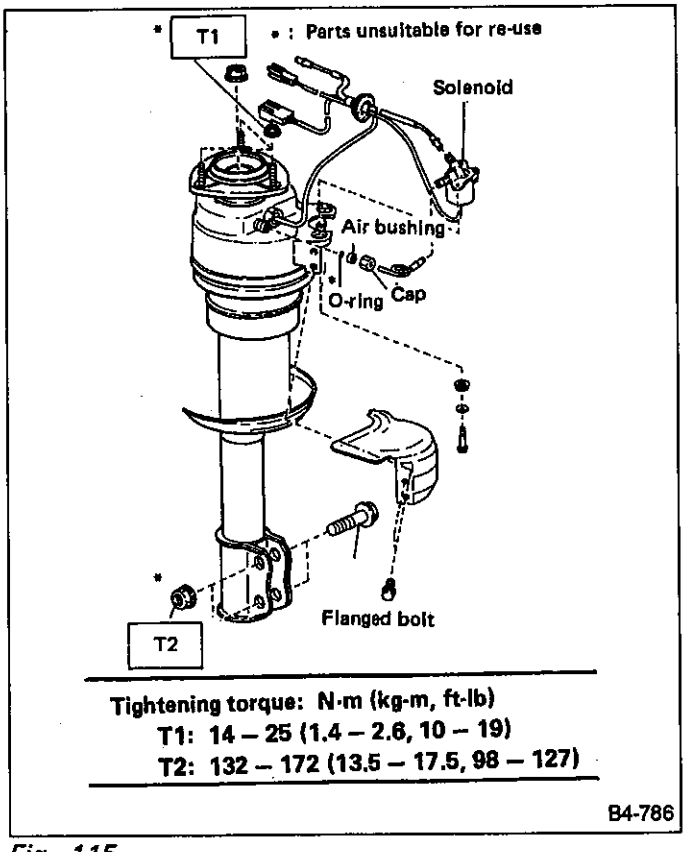

Fig. 115

4. Compressor & Drier Assembly

A: REMOVAL

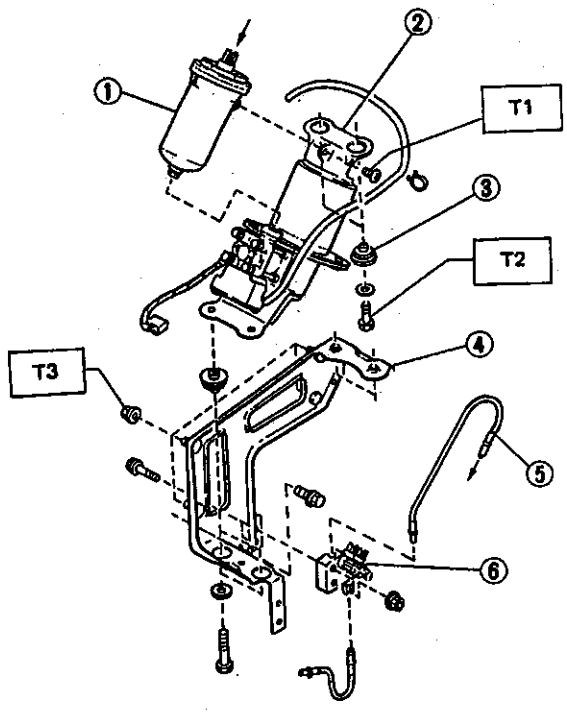

1 Drier
2 Compressor
3 Insulator
4 Compressor bracket
5 Compressor pipe
6 Manifold ASSY

Tightening torque: N·m (kg-m, ft-lb)
T1: 1.5 — 3.9 (0.15 — 0.40, 1.1 — 2.9)
T2: 5.4 — 9.3 (0.55 — 0.95, 4.0 — 6.9)
T3: 10 — 18 (1.0 — 1.8, 7 — 13)

B4-1445

Fig. 116

1) Remove battery.
2) Remove left front wheel.
3) Remove mudguard.
4) Remove stay which is secured to car body and fender (which is secured to bumper). Remove bumper side frame stay.
5) Disconnect compressor harness connector.
6) Disconnect pressure switch and solenoid valve connectors from compressor bracket.
7) Using an AIR PIPE REMOVER (926520000), disconnect five pipes from manifold ASSY.

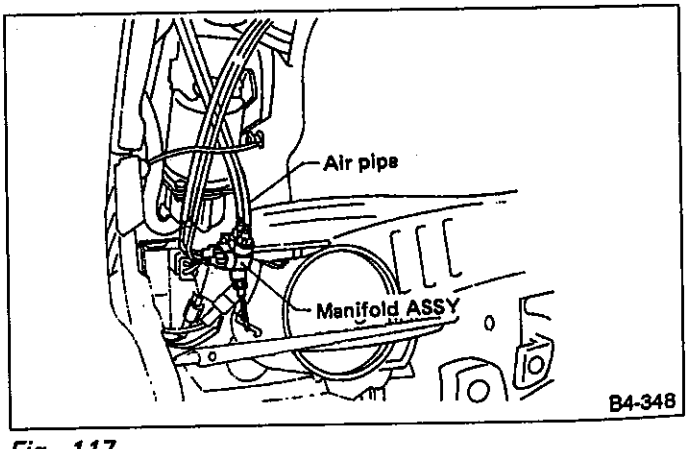

Fig. 117

8) Remove bolt securing compressor bracket to air tank.
9) Remove four nuts securing compressor and dryer to engine compartment, and detach compressor and dryer.
10) Transfer air suction and discharge hose clips from engine compartment to wheelhouse by pushing them.

B: DISASSEMBLY

Disassemble compressor & drier ASSY to compressor, drier, and bracket by removing bolts, etc.

a. Disassembly of both compressor and drier is not allowed. If trouble should occur, replace faulty unit as an ASSY.

b. Remove compressor pipe from dryer or manifold while pressing red portion of collet cap.

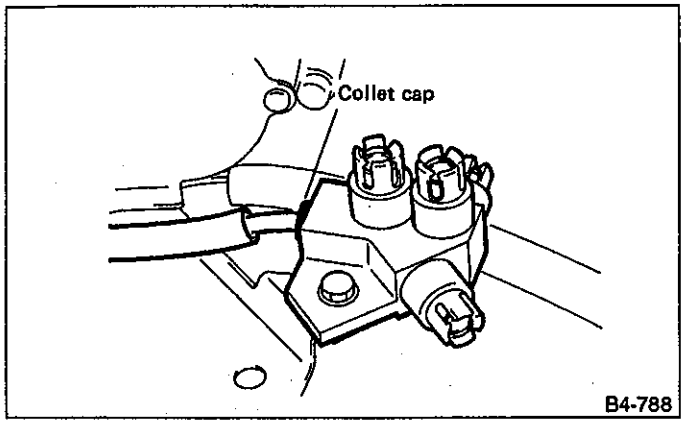

Fig. 118

C: ASSEMBLY AND INSTALLATION

Reverse the sequence of removal and disassembly procedures. Observe the following:

a. Insert compressor pipe until its tube touches bottom.

b. Discard old O-ring and replace with a new one.

c. Apply grease to O-ring, being careful not to allow foreign particles to come in contact with it.

5. Air Tank Assembly

A: REMOVAL

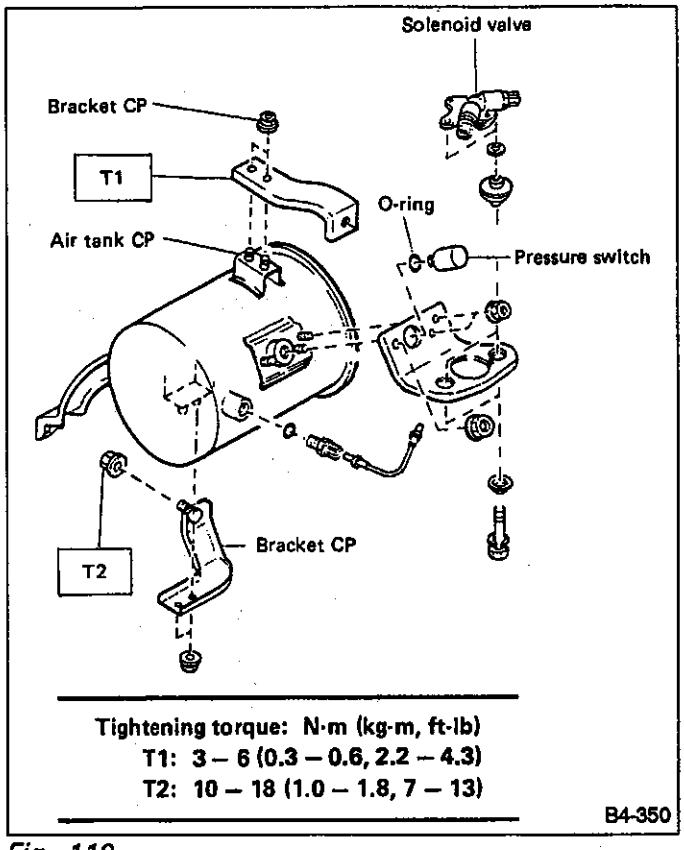

Fig. 119

1) Remove compressor and dryer.
2) Using AIR PIPE REMOVER (926520000), remove air pipe from solenoid valve, then remove solenoid valve coupler.
3) Remove air tank ASSY by loosening one bolt and two nuts.

B: DISASSEMBLY

a. When removing pressure switch or solenoid valve from air tank, discharge air from the tank gradually. Be extremely careful because air tank contains highly pressurized air.

b. When replacing pressure switch or solenoid valve, removal of air tank from vehicle body is unnecessary.

C: ASSEMBLY AND INSTALLATION

Reverse the sequence of removal and disassembly procedures. Observe the following:

a. When installing O-ring, make sure it is free from any foreign matter such as dirt and dust, and then coat with grease. Be careful not to damage O-ring.
b. When installing pressure switch, be sure to apply grease to its thread portion and tighten it to the specified tightening torque.

6. Front Suction and Discharge Solenoid Valve

A: REMOVAL

1. LEFT SOLENOID VALVE

1) Using AIR PIPE REMOVER (926520000), disconnect two pipes from solenoid valve.

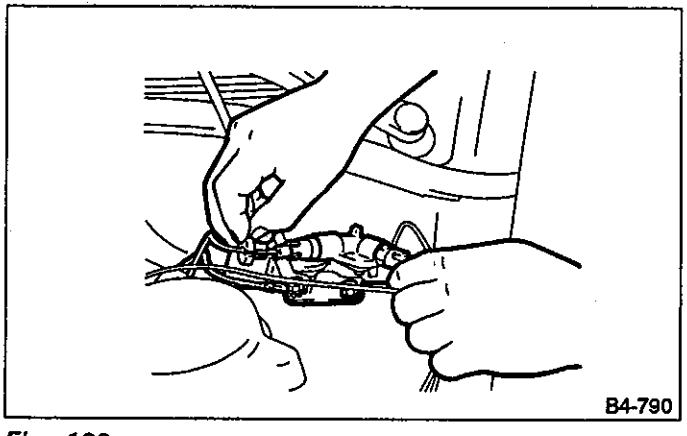

Fig. 120

2) Remove two bolts securing solenoid valve.
3) Disconnect compressor relay connector.
4) Disconnect vehicle height sensor harness connector from bracket.
5) Disconnect solenoid valve connector from body harness connector.
6) Disconnect solenoid valve harness connector from bracket.

2. RIGHT SOLENOID VALVE

1) Disconnect FWD connector from bracket.
2) Using AIR PIPE REMOVER (926520000), disconnect two pipes from solenoid valve.

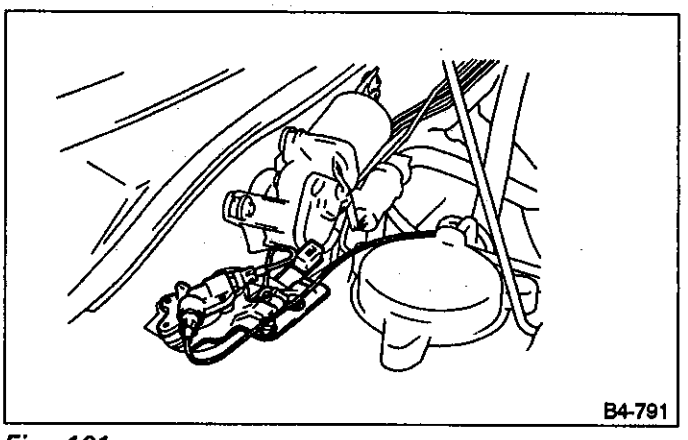

Fig. 121

3) Remove two flanged bolts.

B: INSTALLATION

Installation is in the reverse order of removal.

a. Tighten ground terminal together with flanged bolt.
b. Be careful not to scratch diaphragm.
c. Discard old O-ring and replace with a new one.
d. Be careful not to scratch mating surfaces of O-ring and other parts.
e. Apply grease to O-ring, being careful not to allow foreign particles to come in contact with it.

7. Rear Suction and Discharge Solenoid Valve

A: REMOVAL

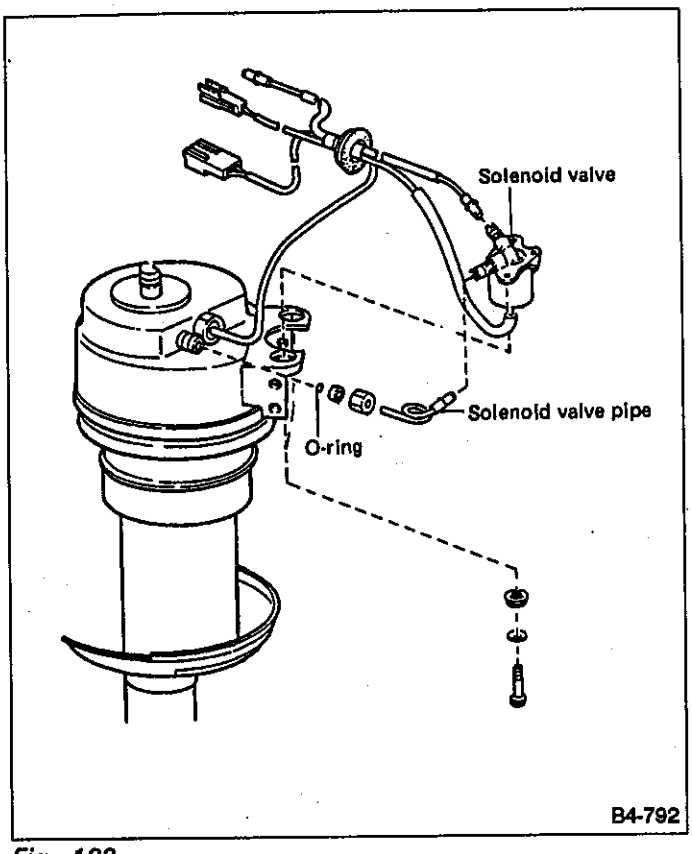

Fig. 122

1) Remove rear strut ASSY from vehicle.
2) Remove solenoid valve protector.
3) Remove solenoid valve from Strut ASSY
4) Using AIR PIPE REMOVER (926520000), disconnect pipe.
5) Disconnect solenoid valve harness from connector, and remove harness from grommet.

B: INSTALLATION

Installation is in the reverse order of removal.

a. Be careful not to scratch diaphragm.
b. Discard old O-ring and replace with a new one.
c. Be careful not to scratch mating surfaces of O-ring and other parts.
d. Apply grease to O-ring, being careful not to allow foreign particles to come in contact with it.

T TROUBLESHOOTING

1. Conventional Suspension

1. IMPROPER VEHICLE POSTURE OR IMPROPER WHEEL ARCH HEIGHT

Possible causes	Countermeasures
(1) Permanent distortion or breakage of coil spring	Replace.
(2) Unsmooth operation of damper strut	Replace.
(3) Installation of wrong transverse link	Replace with proper parts.
(4) Deformation of transverse link	Replace.

2. POOR RIDE COMFORT

1) Large rebound shock.

2) Rocking of vehicle continues too long after running over bump and/or hump.

3) Large shock in bumping.

Possible causes	Countermeasures
(1) Breakage of coil spring	Replace.
(2) Overinflation pressure of tire	Adjust.
(3) Improper wheel arch height	Adjust or replace coil springs with new ones.
(4) Fault in operation of damper strut	Replace.
(5) Damage or deformation of damper strut lower end bushing	Replace.
(6) Unsuitability of maximum and/or minimum length of damper strut	Replace with proper parts.
(7) Deformation or loss of bushing	Replace.
(8) Deformation or damage of helper ASSY	Replace.

3. NOISE

Possible causes	Countermeasures
(1) Wear or damage of damper strut component parts	Replace.
(2) Damage or deformation of damper strut lower end bushing	Replace.
(3) Loosening of transverse link installing bolt	Retighten to the specified torque.
(4) Deformation or loss of bushing	Replace.
(5) Loosening of lateral link installing bolt to crossmember bracket	Retighten to the specified torque.
(6) Unsuitability of maximum and/or minimum length of damper strut	Replace with proper parts.
(7) Breakage of coil spring	Replace.
(8) Loosening of each bolt and/or nut	Retighten to the specified torque.

2. Troubleshooting for Air Suspension

A: BASIC TROUBLESHOOTING PROCEDURE

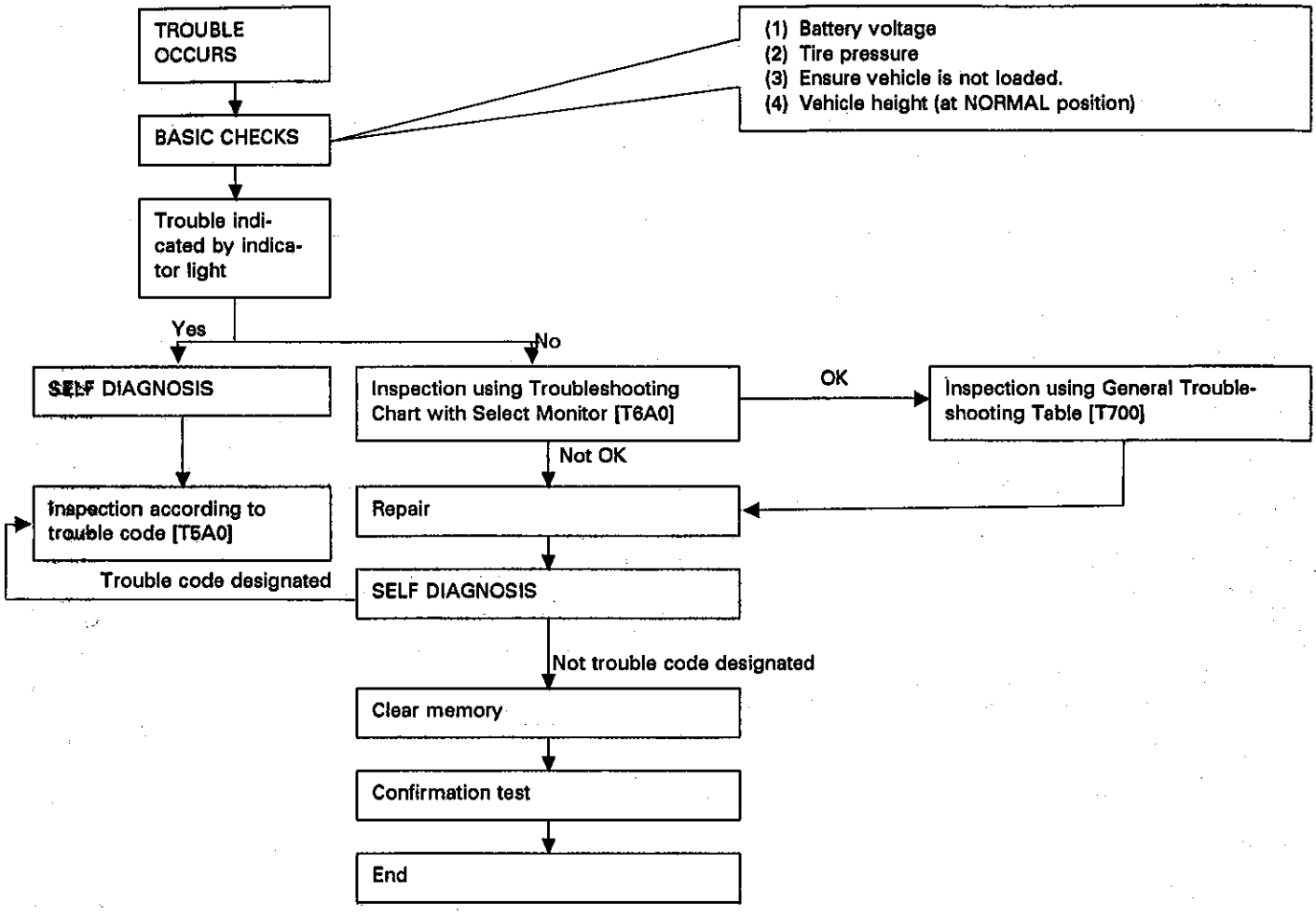

B: TROUBLE INDICATED BY INDICATOR LIGHT

If any fault or trouble occurs, the air suspension indicator light ("Hi" mark) located above the height control switch blinks.
There are two types of diagnostic items. One type is checked immediately after the ignition switch is turned ON; the other type are checked at least 10 minutes after the switch has been turned ON.
When a problem is shown on the indicator, it can be determined by reading a trouble code (which is indicated in terms of "the number of indicator light blinks") during SELF-DIAGNOSIS.
Problems which occurred in the past are stored in memory for ready reference. When the indicator light does not show a trouble code, the *select monitor is used to measure the characteristics of sensors, etc. to determine the item in problem.

***: Applicable cartridge of select monitor is type "H" (No. 498347700).**

Indicator signal is as follows:

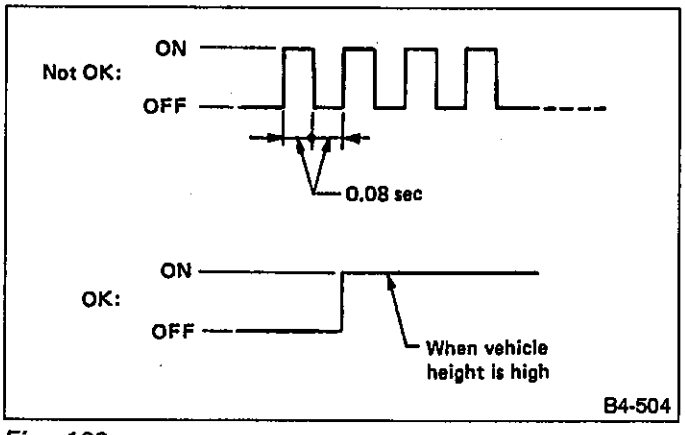

Fig. 123

C: SELF-DIAGNOSIS

When the indicator light (located above the height control switch) blinks, conduct self-diagnosis as described below:

1) Turn ignition switch OFF.
2) Connect No. 1 terminal of diagnosis connector (located below instrument lower cover) to ground terminal.

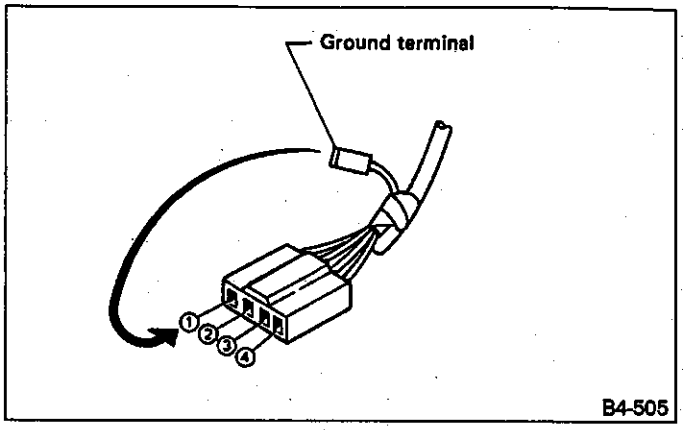

Fig. 124

3) Turn ignition switch ON. A trouble code will then be shown by blinking of the indicator light.

When multiple trouble codes are stored in memory, they will be shown, starting with the smallest trouble code number.

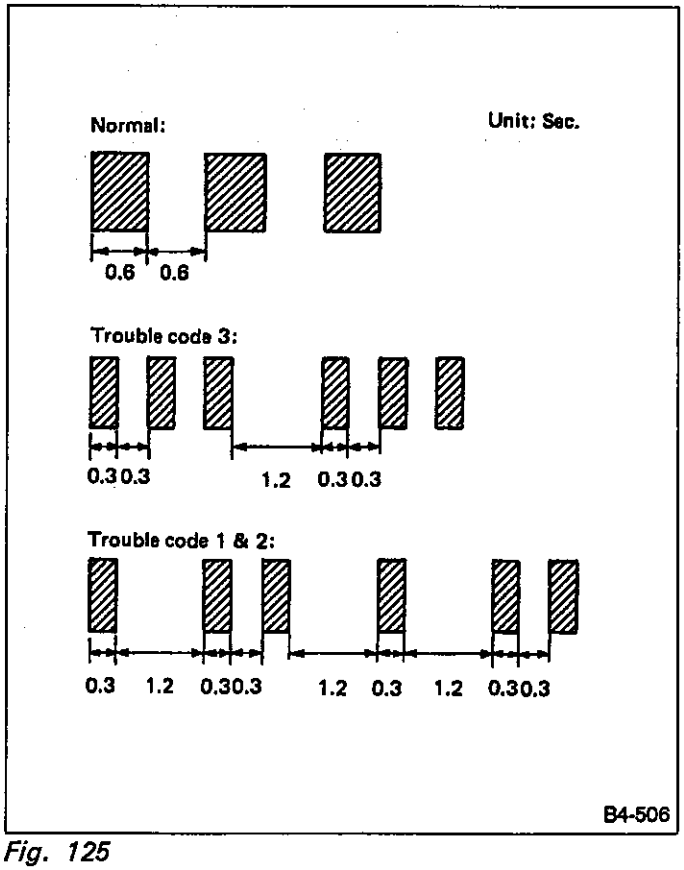

Fig. 125

4) When there are no trouble codes shown by indicator light, turn ignition switch OFF and disconnect ground terminal from diagnosis connector.

D: LIST OF TROUBLE CODES

Trouble code	Item	Content of diagnosis
1	Height sensor (right front)	"HIGH" and "LOW" signals are entered simultaneously.
2	Height sensor (left front)	↑
3	Height sensor (right rear)	↑
4	Height sensor (left rear)	↑
5	Solenoid valve (right front)	Output from solenoid valve continues for 10 minutes.
6	Solenoid valve (left front)	↑
7	Solenoid valve (right rear)	↑
8	Solenoid valve (left rear)	↑
9	Compressor relay	↑
10	Discharge solenoid valve	Output has already been emitted when trouble code (5 — 8) is shown by indicator light.

E: CLEAR MEMORY

The self-diagnosis system has a memory function which stores a multiple of trouble codes. After all problem items have been repaired, clear trouble codes in memory.

CLEAR MEMORY:
Removal of No. 25 Fuse (Ignition switch OFF)

3. Air Suspension Control Unit I/O Signal

A: I/O SIGNAL VOLTAGE

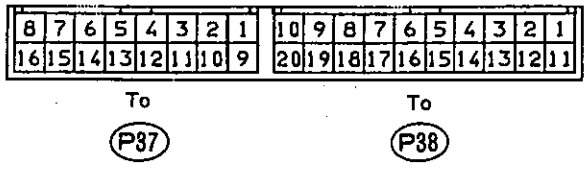

B4-899

Fig. 126

Item			Connector	Terminal	Measuring conditions and voltage (V)			Remarks
					Ignition switch			
					OFF	ON		
						Height control ON	Height control OFF	
Battery			P37	2	Battery voltage	←		
Ignition power supply			P37	3	0	Battery voltage		
Pressure switch			P37	5	↑	0 (low pressure)	Battery voltage (high pressure)	When select monitor is used to check height sensor, force-fully discharge air from air tank.
Diagnosis connector			P37	4	↑	0	Approx. 5	
Height sensor	FR	LOW	P37	7	↑	1, max.	Approx. 5	When select monitor is used to check height sensor, set in force drive mode. When select monitor is not used to check height sensor, move air suspension up and down using a suitable means.
		HIGH	P37	15	↑	↑	↑	
	FL	LOW	P37	8	↑	↑	↑	
		HIGH	P37	14	↑	↑	↑	
	RR	LOW	P37	11	↑	↑	↑	
		HIGH	P37	12	↑	↑	↑	
	RL	LOW	P37	16	↑	↑	↑	
		HIGH	P37	6	↑	↑	↑	
Vehicle speed sensor			P37	10	↑	0	↑	Drive vehicle to check.
Indicator light	("HI" mark)		P38	12	↑	0.5, max. (light ON)	Battery voltage (light OFF)	

Solenoid valve	FR	P38	8	1, max. (switch ON)	Battery voltage (switch OFF)	When select monitor is used to check solenoid valve, set it in forced height drive mode.
	FL	P38	5	↑	↑	
	RR	P38	6	↑	↑	
	RL	P38	7	↑	↑	When select monitor is used to check condition of air charge and discharge, set in forced mode.
	Charge	P38	9	↑	↑	
	Discharge	P38	1	↑	↑	
Select monitor	Clock output	P38	20	0	5	
	Data input/output	P38	19	↑	↑	

B: I/O SIGNAL DIAGRAM

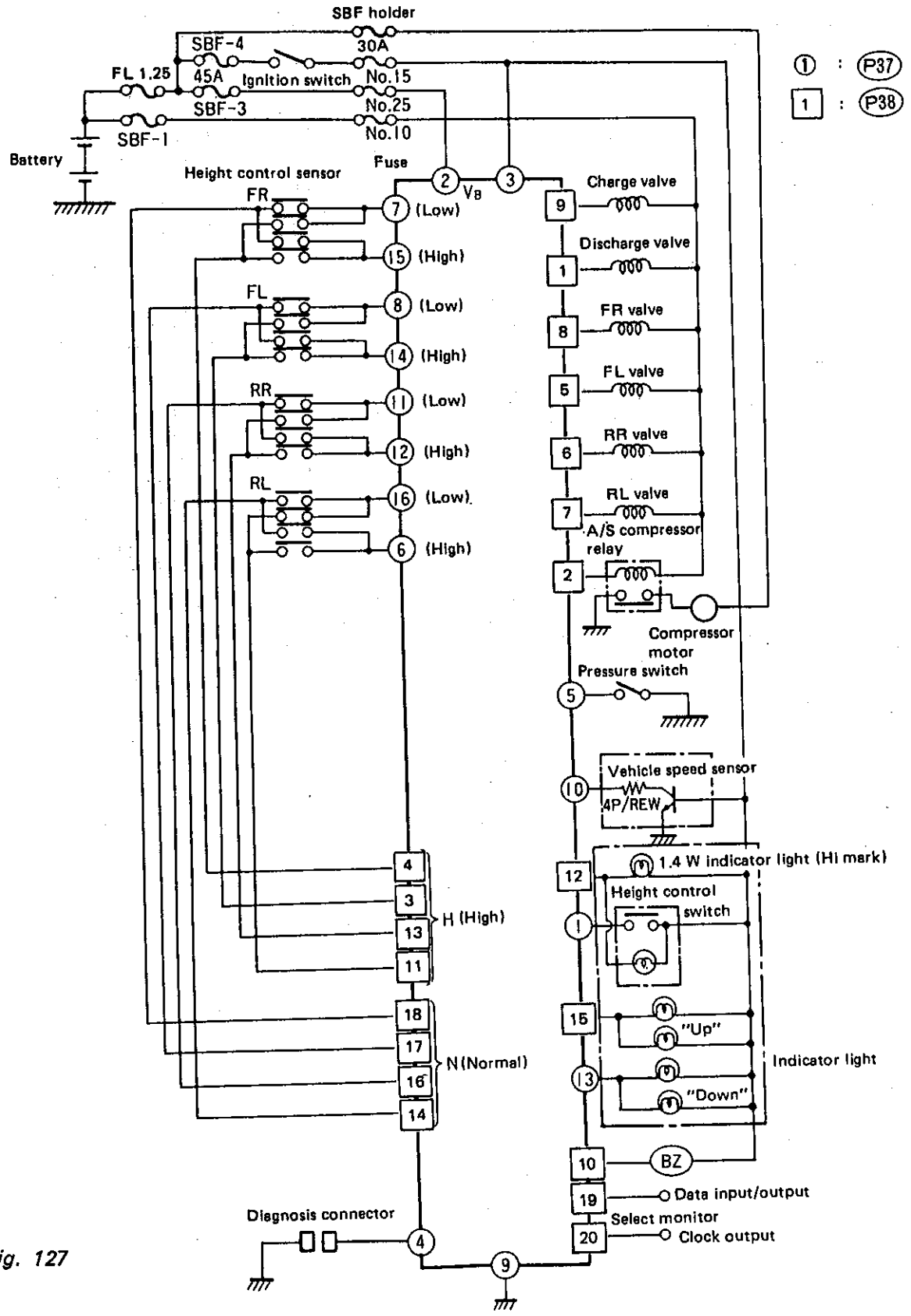

Fig. 127

4. Diagram of Air Suspension System

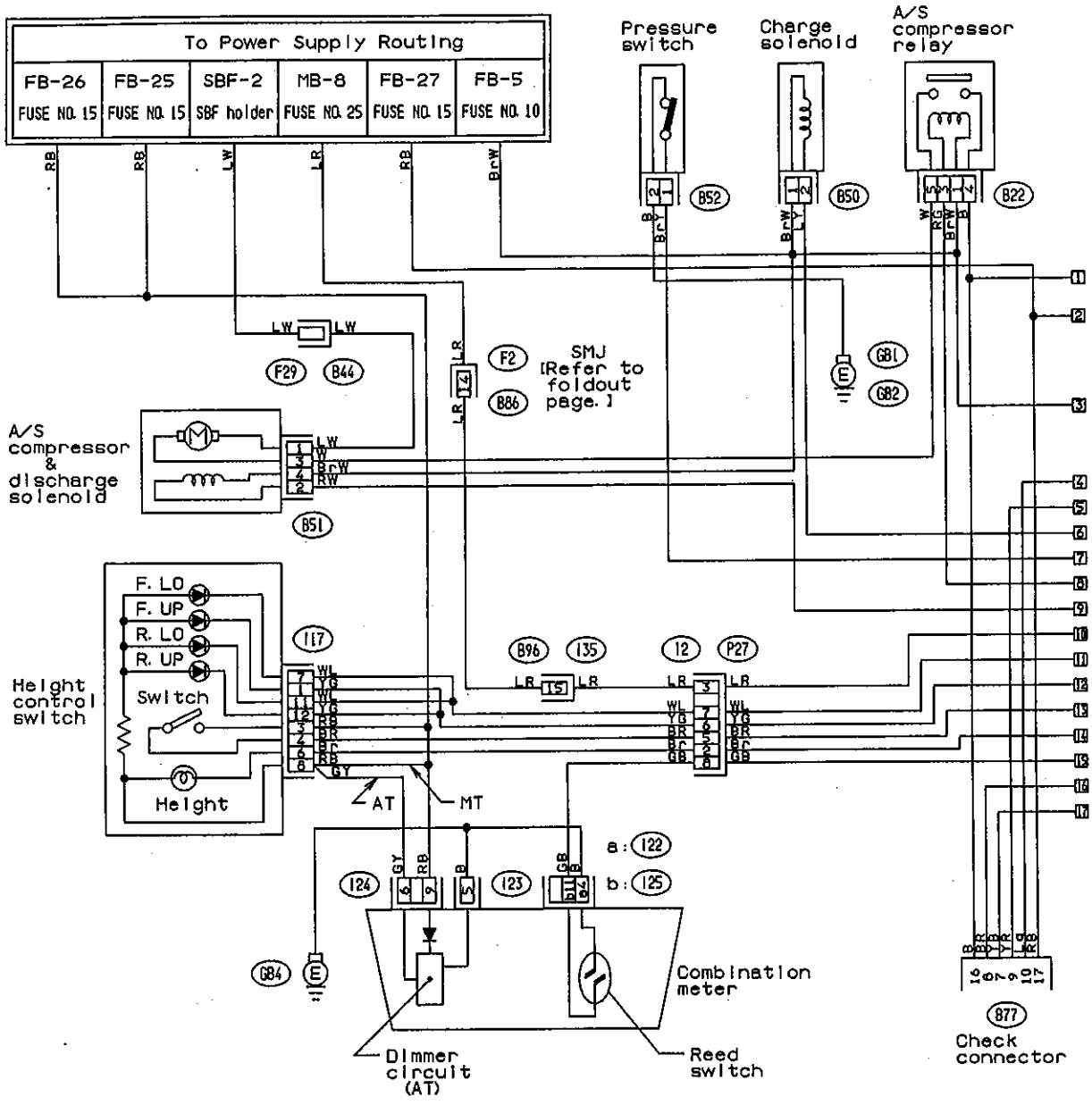

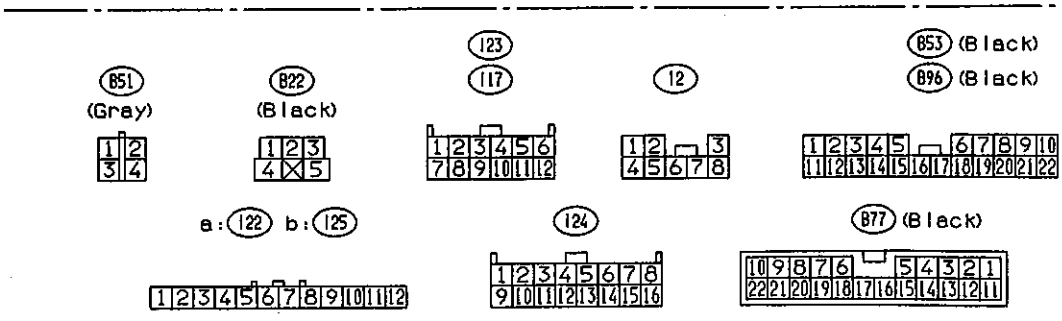

BR80-03A

Fig. 128

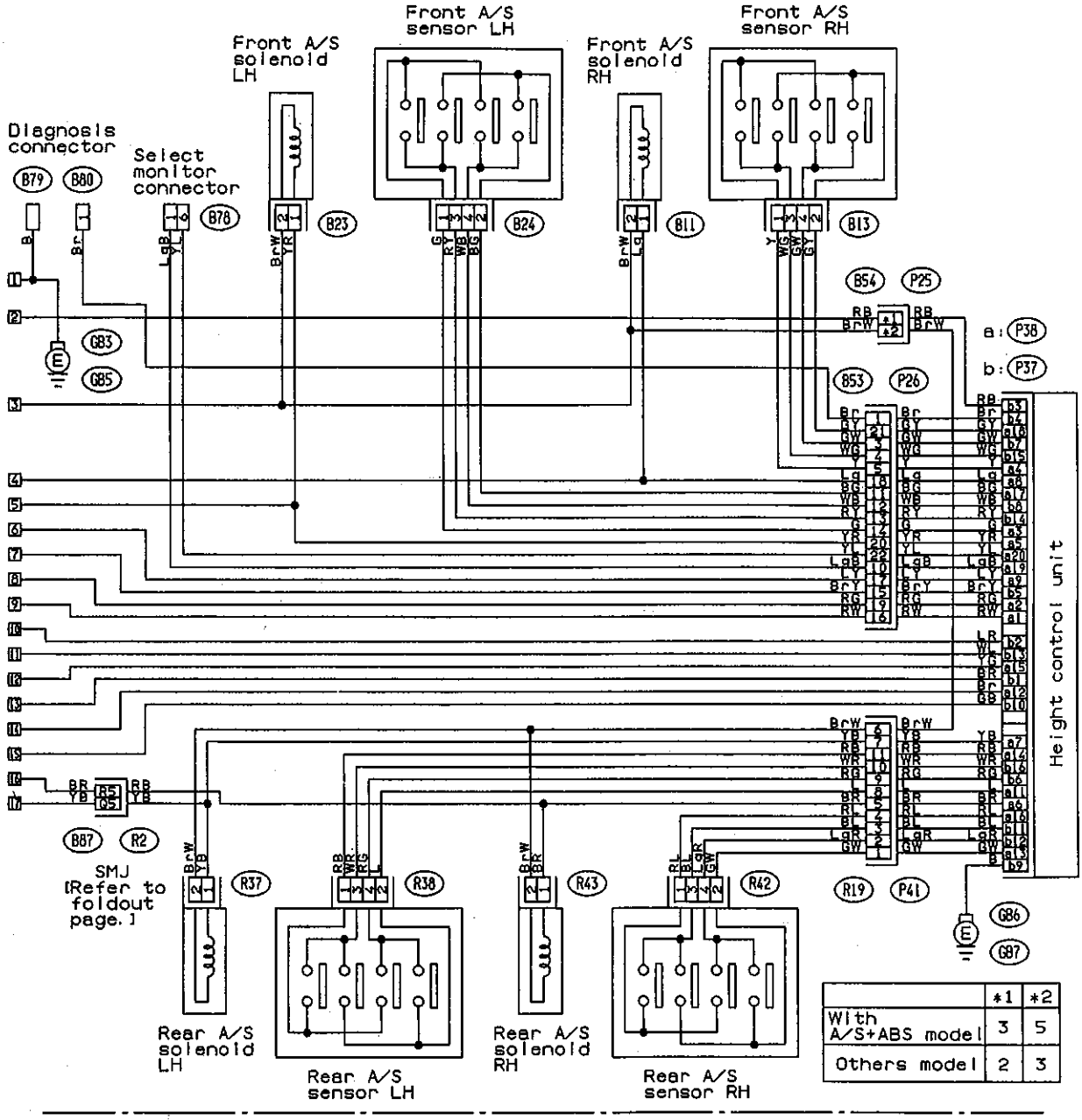

	*1	*2
With A/S+ABS model	3	5
Others model	2	3

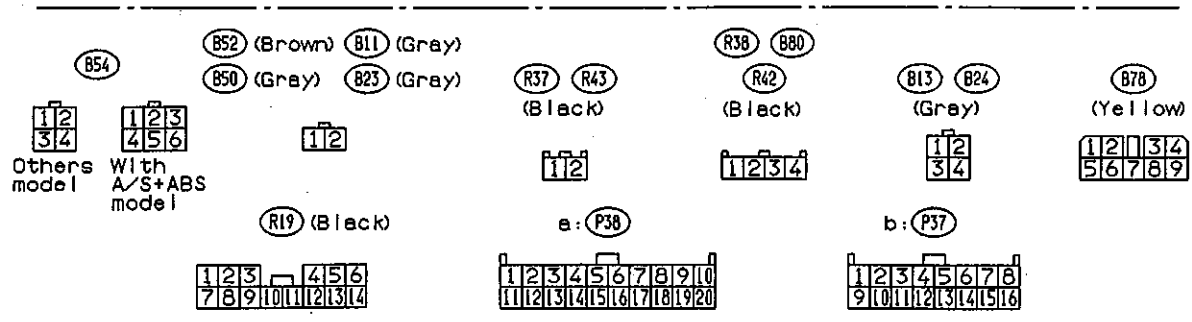

BR80-03B

5. Troubleshooting Chart with Trouble Code

A: TROUBLE CODE (1-4) — HEIGHT SENSOR —

CONTENT OF DIAGNOSIS:
- Inoperative height sensor
- Shorted wiring
- Erroneous operation of height sensor

TROUBLE SYMPTOM:
Vehicle height cannot be controlled properly.

1-1	Check if each height sensor operates properly when activated using select monitor (set in force-drive mode).	Not OK →	Faulty height sensor. (Replace strut.)
1-2	Check height sensors.		
	OK ↓		
2	Check harness between height sensor and suspension control unit.	Not OK →	Repair harness.
	OK ↓		
3	Check suspension control unit.	Not OK →	Replace suspension control unit.
	OK ↓		
	Malfunction of sensor		

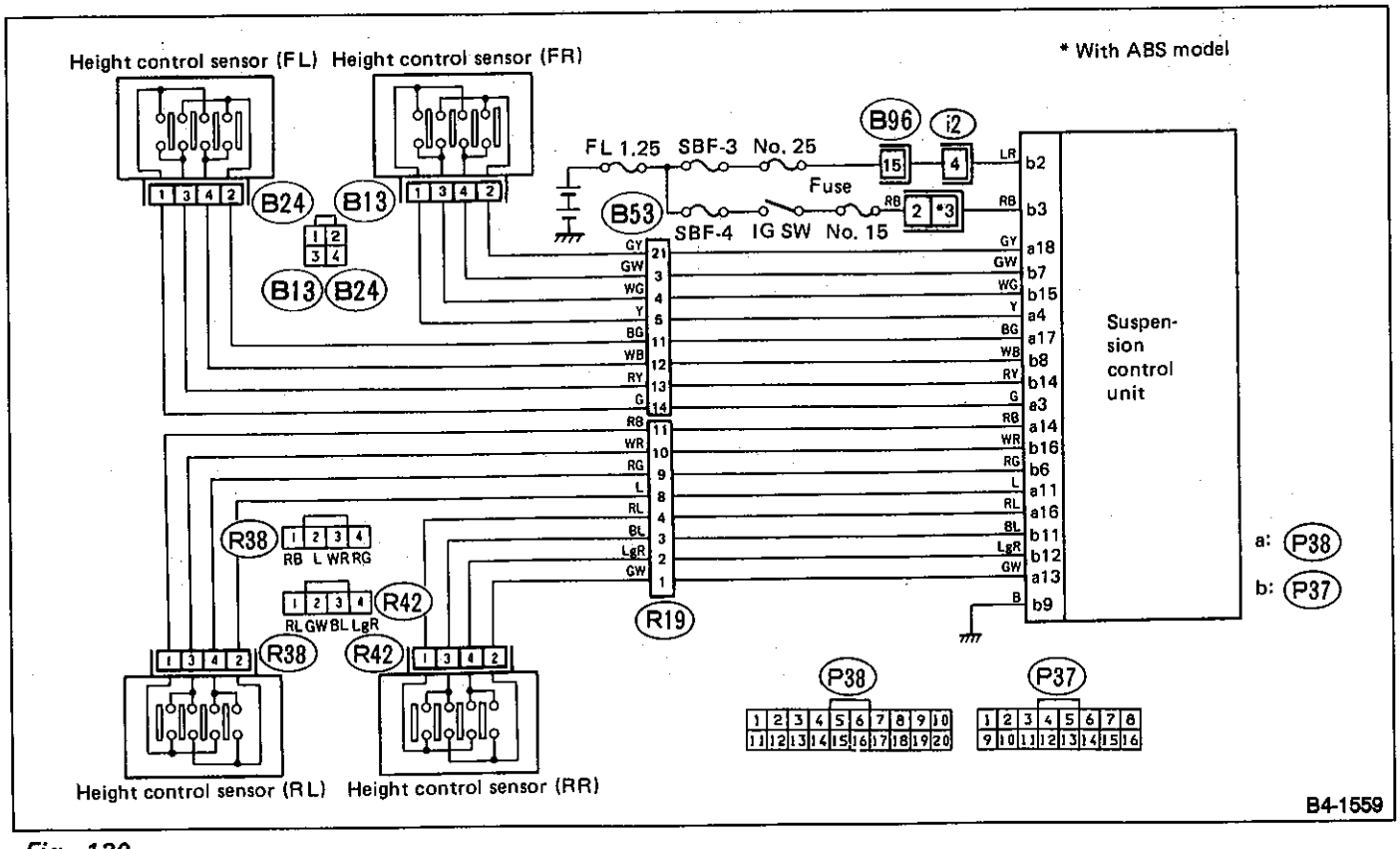

Fig. 130

1-1. CHECK IF EACH HEIGHT SENSOR OPERATES PROPERLY WHEN ACTIVATED USING SELECT MONITOR (SET IN FORCE-DRIVE MODE).

1) Connect select monitor.
2) Set select monitor in force-drive mode.
3) Locate faulty wheel by selecting driving point / direction.

Specifications:
Normal (if LED's which refer to "high" and "low" are not shown simultaneously)

1-2. CHECK HEIGHT SENSOR.

1) Remove solenoid valve and pipe from strut ASSY to be checked. Bleed air.
2) Disconnect height control sensor connector.
3) While gradually raising vehicle off with a jack placed under crossmember, measure resistance between respective terminals (on height sensor side).

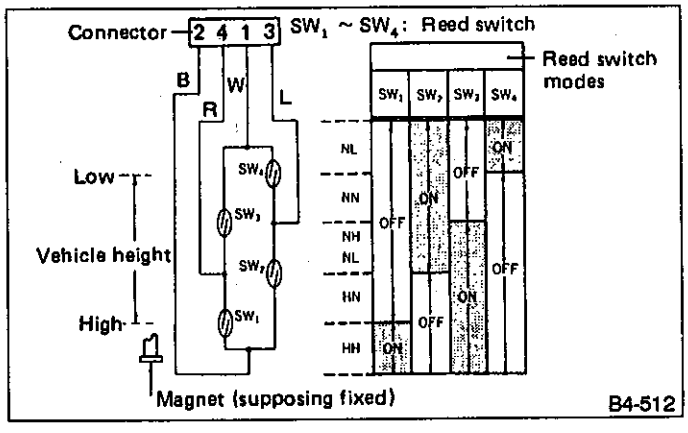

Fig. 131

Specifications

Terminal (Wire color)	Read switch	Continuity (High position ⇄ Low position)
2 (B) — 4 (R)	SW_1	OFF ⇆ ON
2 (B) — 3 (L)	SW_2	ON ⇆ OFF
4 (R) — 1 (W)	SW_3	OFF ⇆ ON
1 (W) — 3 (L)	SW_4	ON ⇆ OFF

2. CHECK HARNESS BETWEEN HEIGHT SENSOR AND SUSPENSION CONTROL UNIT.

1) Disconnect harness connectors from suspension control unit and height sensor.
2) Measure resistance between connector terminals.

Height sensor		Suspension control unit	
FR (B13)	No. 1	(P38)	No. 4
	No. 2		No. 18
	No. 3	(P37)	No. 15
	No. 4		No. 7
FL (B24)	No. 1	(P38)	No. 3
	No. 2		No. 17
	No. 3	(P37)	No. 14
	No. 4		No. 8
RR (R42)	No. 1	(P38)	No. 16
	No. 2		No. 13
	No. 3	(P37)	No. 11
	No. 4		No. 12
RL (R38)	No. 1	(P38)	No. 14
	No. 2		No. 11
	No. 3	(P37)	No. 16
	No. 4		No. 6

Specified resistance:
0 Ω

3) Measure resistance between each connector and ground.

Specified resistance:
1 MΩ min.

3. CHECK SUSPENSION CONTROL UNIT.

1) Measure terminal voltage of suspension control unit.
(1) Measure voltage between suspension control unit connector and ground.

Connector & Terminal / Specified voltage:
(P37) No. 2 — Body / 10 — 12 V

(2) Turn ignition switch ON and measure voltage between suspension control unit connector and ground.

Connector & Terminal / Specified voltage:
(P37) No. 3 — Body / 10 — 12 V

(3) Measure resistance between suspension control unit connector and ground.

Connector & Terminal No. / Specified resistance:
(P37) No. 9 — Body / 0 Ω

B: TROUBLE CODES (5 - 8) — SOLENOID VALVE —

CONTENT OF DIAGNOSIS:
- Open solenoid valve circuit
- Open wiring
- Air leakage

TROUBLE SYMPTOM:
- Height of particular suspension cannot be adjusted.
- Rear suspension does not lower when control is shifted from "Hi" to "Normal". (Faulty front solenoid valve)
- Front suspension does not lower when control is shifted from "Normal" to "Hi". (Faulty rear solenoid valve)

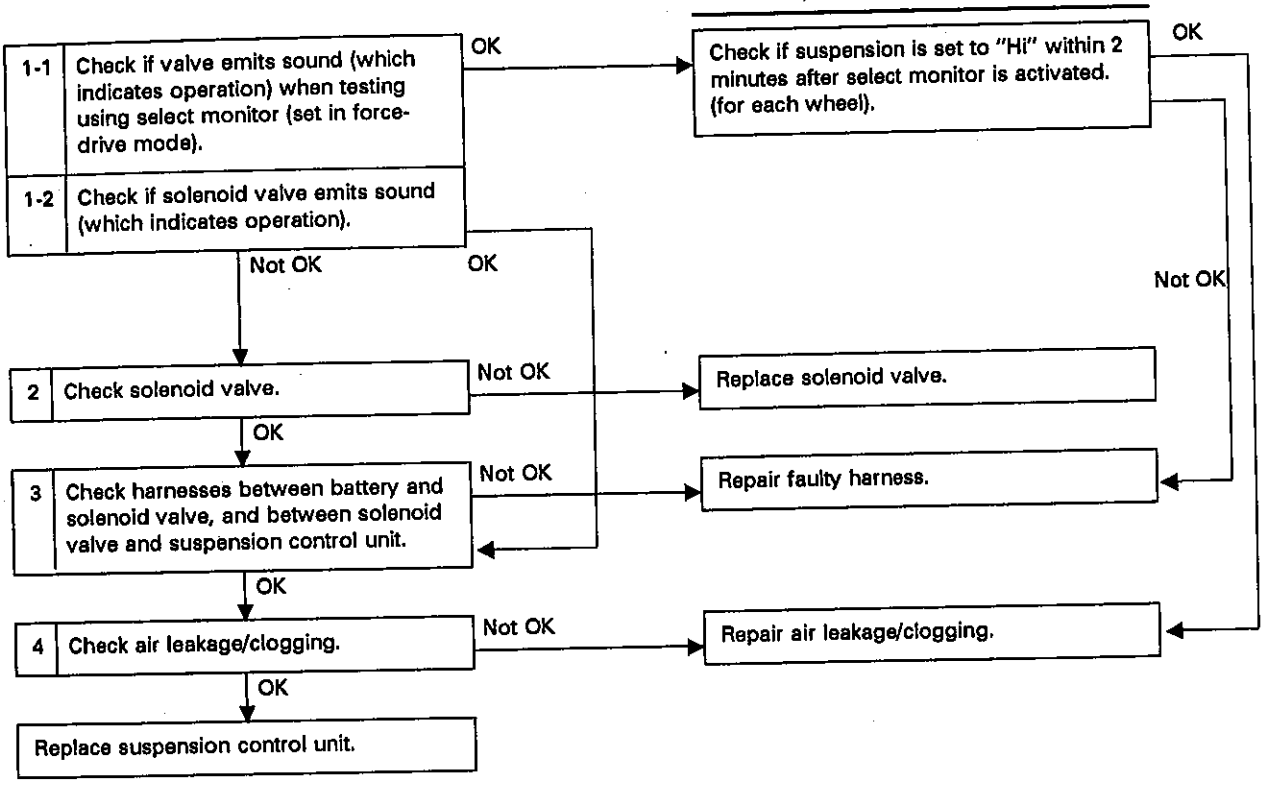

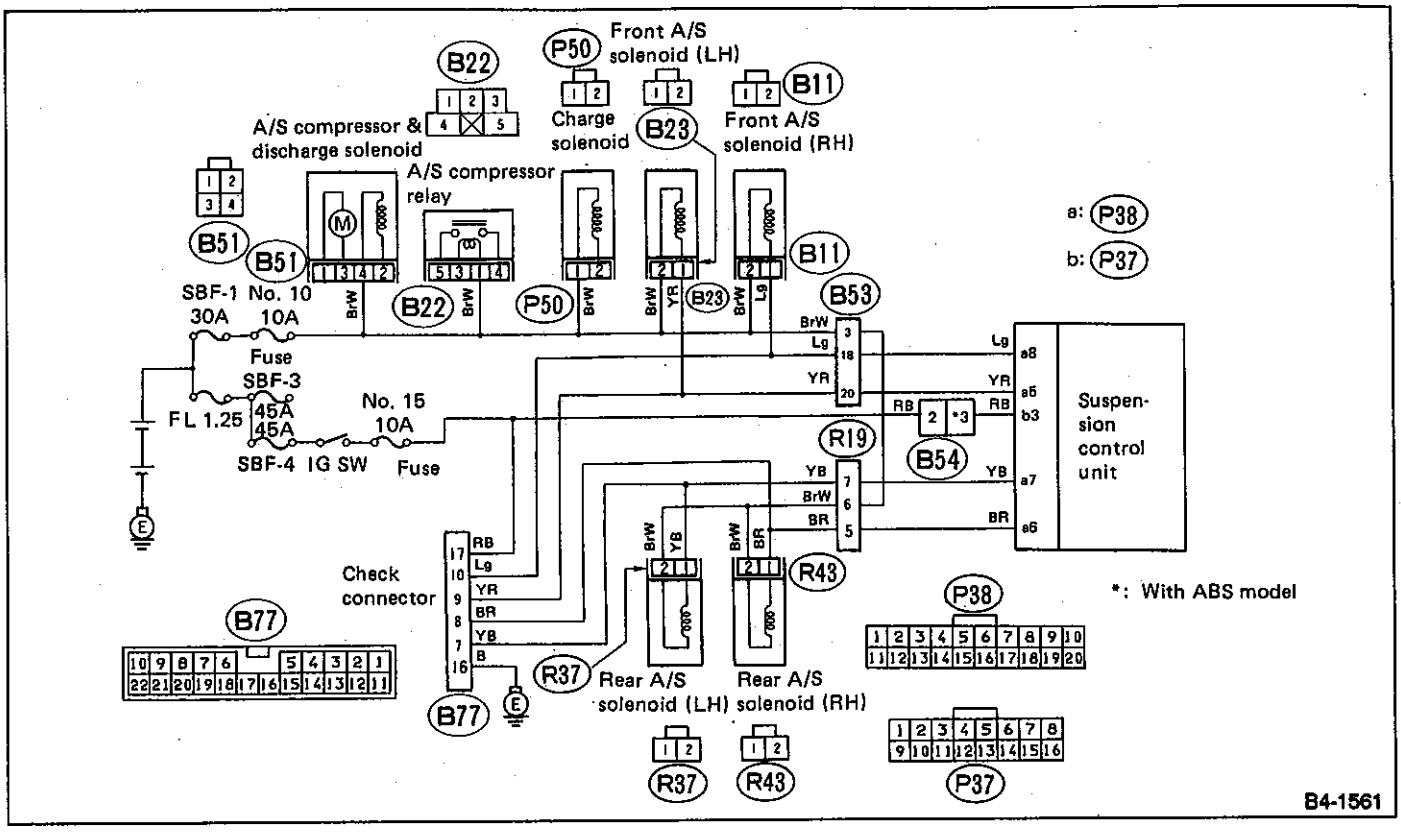
Front A/S solenoid (LH)
Charge solenoid
Front A/S solenoid (RH)
A/S compressor & discharge solenoid
A/S compressor relay
a: P38
b: P37
SBF-1 30A
No. 10 10A Fuse
SBF-3 45A
FL 1.25
45A
SBF-4
IG SW
No. 15 10A Fuse
Suspen-sion control unit
Check connector
Rear A/S solenoid (LH)
Rear A/S solenoid (RH)
*: With ABS model
B4-1561

Fig. 132

1-1. CHECK SOLENOID VALVE FOR SOUND (WHICH INDICATES OPERATION).

1) Connect select monitor.
2) Check valve for sound of proper operation (with select monitor set in force-drive mode).

Specifications:
Valve must emit sound (which indicates operation)

1-2. CHECK SOLENOID VALVE FOR SOUND OF PROPER OPERATION.

1) Ground terminal No. 10 (B77) using line-end, check connector, and check solenoid valve for sound of proper operation.

Specifications:
Valve must emit sound (which indicates operation)

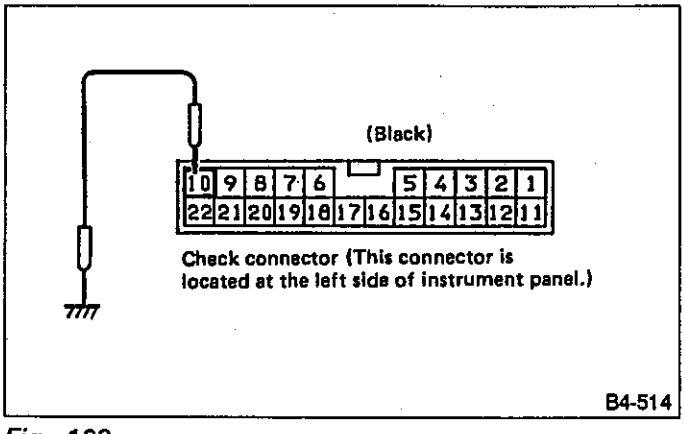

Fig. 133

2. CHECK SOLENOID VALVE.

1) Disconnect connector from solenoid valve.
2) Measure resistance between solenoid valve's terminals.

Terminal No. / Specified resistance:
No. 1 — No. 2 / 25 — 35 Ω

3) Apply 12 volts to solenoid valve to check sound of proper operation.

Specifications:
Valve emits sound — Normal
Valve does not emit sound — Seized

3. CHECK HARNESSES BETWEEN BATTERY AND SOLENOID VALVE, AND BETWEEN SOLENOID VALVE AND SUSPENSION CONTROL UNIT.

1) Check harness between battery and solenoid valve.
   (1) Disconnect solenoid valve connector.
   (2) Remove fuse No. 10.
   (3) Measure resistance between fuse terminal and solenoid valve connector terminals.

Fuse & Terminal No. / Specified resistance
Fuse No. 10 — (B11) No. 2 / 0 Ω
Fuse No. 10 — (B23) No. 2 / 0 Ω
Fuse No. 10 — (R43) No. 2 / 0 Ω
Fuse No. 10 — (R37) No. 2 / 0 Ω

   (4) Measure resistance between fuse terminal and ground.

Fuse & Terminal No. & Body / Specified resistance:
Fuse No. 10 — Body / 1 MΩ min.

2) Check harness between solenoid valve and suspension control unit.
   (1) Disconnect harness connectors from solenoid valve and suspension control unit.
   (2) Check resistance between connector terminals.

Connector & Terminal / Specified resistance:
FR (B5) No. 1 — (P38) No. 8 / 0 Ω
FL (B11) No. 1 — (P38) No. 5 / 0 Ω
RR (R49) No. 1 — (P38) No. 6 / 0 Ω
RL (R46) No. 1 — (P38) No. 7 / 0 Ω

3) Measure resistance between respective connector terminals and ground.

Connector & Terminal / Specified resistance:
(P38) No. 8 — Body / 1 MΩ min.
(P38) No. 5 — Body / 1 MΩ min.
(P38) No. 6 — Body / 1 MΩ min.
(P38) No. 7 — Body / 1 MΩ min.

4. CHECK AIR LINE FOR LEAKAGE OR CLOGGING.

1) Air-line leakage

(1) Connect a pressure gauge, as shown in figure below.

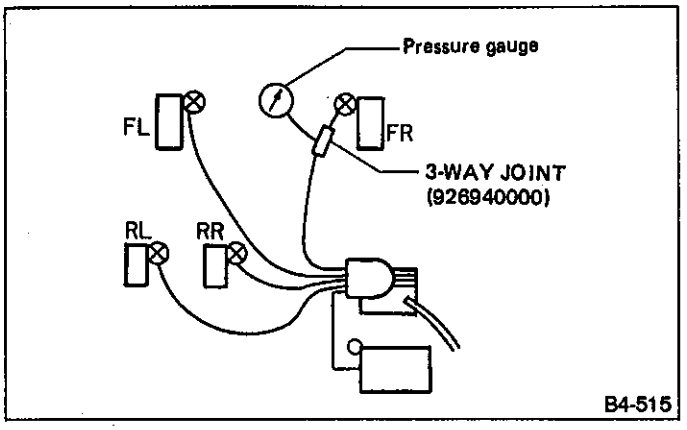

Fig. 134

(2) Energize charge solenoid valve until air pressure is 490 to 588 kPa (5 to 6 kg/cm^2, 71 to 85 psi) on pressure gauge indicator.

(3) Wait for 10 minutes and check if pressure drop is within specifications.

Specifications:
98 kPa (1.0 kg/cm^2, 14 psi)

(4) If pressure test checks out "Not OK", connect pressure gauge as shown in figure below.

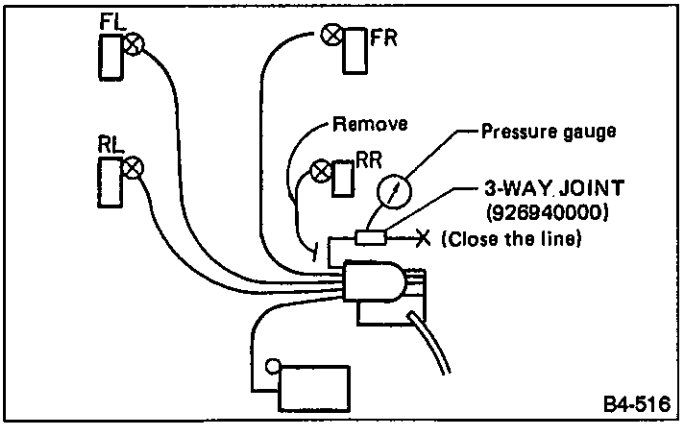

Fig. 135

(5) Repeat steps (2) and (3) above.

(6) Repeat steps (4) and (5) on each strut.

(7) If pressure drop is not noted when pressure gauge is disconnected, air leakage is present in that line.

2) Air line clogging

Connect discharge solenoid valve to ground to ensure that sound which indicates air discharge occurs.

Specifications:
OK (when sound occurs when discharge solenoid valve is grounded)

3) Air leakage from air suspension ASSY

Disconnect coupler from height sensor. Dip coupler ① (located on air suspension side) into container filled with water to check if air bubbles appear. Remove air suspension ASSY from vehicle and dip into container filled with water to check if air bubbles appear at or around ②.

When front air suspension ASSY is checked, do not dip it into water beyond the arrow. Portion ③ must be checked using SUBARU CRC5-56 (004301003). (Do not wet ball bearing location with water.) Note that entire rear air suspension ASSY can be dipped into water to check air leakage.

- **After air leakage checks, completely remove water from air suspension ASSY using compressed, dry air.**

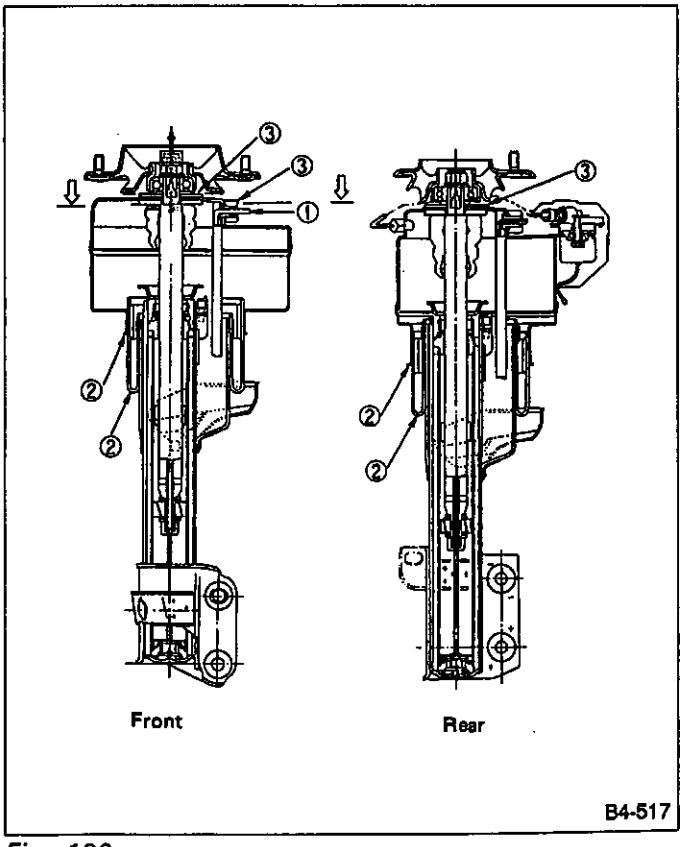

Fig. 136

4) Air leakage from air pipe (on strut mount)
Check air leakage by placing soapy water over pipe and joint or using SUBARU CRC5-56 (004301003), as required. Do not allow soapy water to get into ball bearing in strut mount.
5) Air leakage from air tank ASSY
Before checking air tank ASSY for leakage, ensure that air line is free from leakage.

(1) Repeat ①, ② and ③ in step 1) under "Air line leakage".
(2) Energize discharge solenoid valve.
(3) Check pressure drop.

Specifications:
49 kPa (0.5 kg/cm², 7 psi), max.

This page has been intentionally left blank

C: TROUBLE CODE 9 — COMPRESSOR A —

CONTENT OF DIAGNOSIS:
- Open circuit in compressor relay energizing coil
- Faulty compressor
- Open wiring and faulty pressure switch

TROUBLE SYMPTOM:
- Compressor does not rotate to control suspension height.
- Compressor does not stop properly.

1	Check compressor relay.	Not OK	Replace compressor relay.
	OK		
2	Check compressor.	Not OK	Replace compressor.
	OK		
3	Check harness between battery and compressor, compressor and compressor relay, and between compressor relay and suspension control unit.	Not OK	Repair harness.
	OK		
	Replace suspension control unit.		

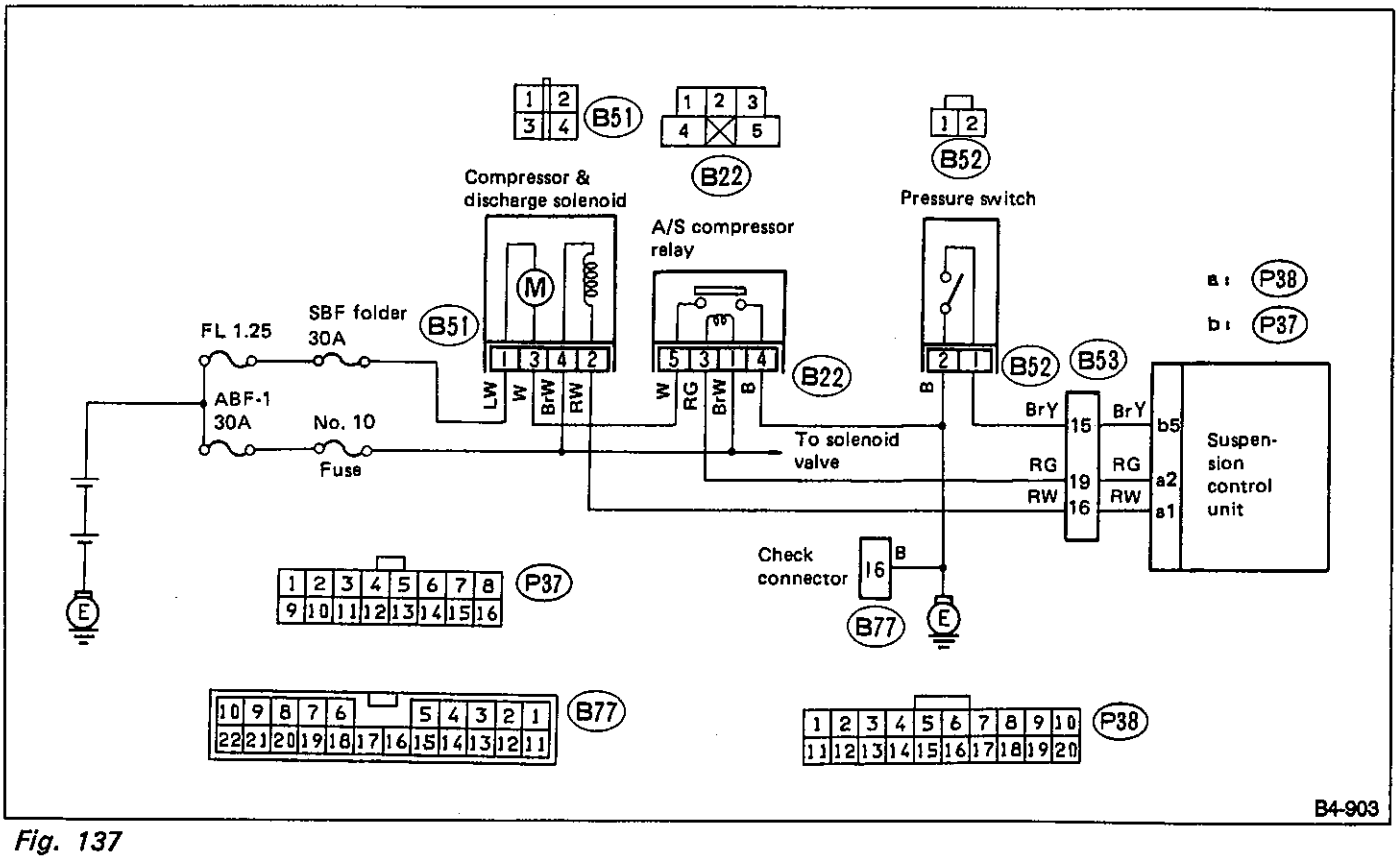

Fig. 137

1. CHECK COMPRESSOR RELAY.

1) Disconnect connector from compressor relay.
2) Measure resistance between compressor relay terminals.

Terminal No. / Specified resistance:
No. 1 — No. 3 / 75 — 85 Ω

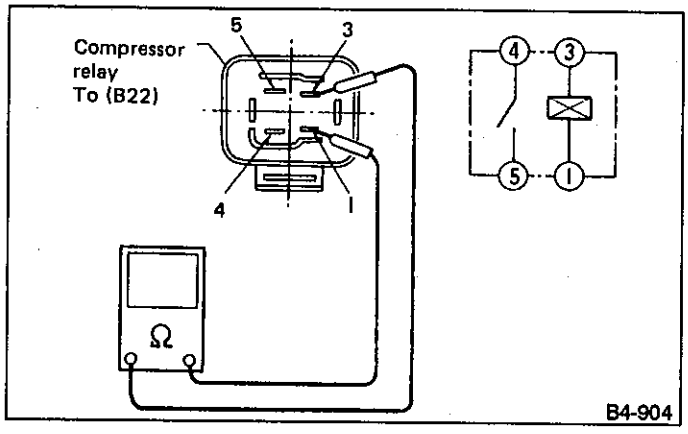

Fig. 138

3) While applying voltage between terminals (1) and (3), measure resistance between terminals (4) and (5).

Terminal No. / Specified resistance:
No. 4 — No. 5 / 0 Ω

2. CHECK COMPRESSOR

1) Disconnect connector from compressor.
2) Check that motor operates when battery is connected to terminals (1) and (3).
3) Measure resistance between terminals.

Terminal No. / Specified resistance:
No. 1 — No. 3 / 0.3 — 0.7 Ω

3. CHECK HARNESS BETWEEN BATTERY AND COMPRESSOR, COMPRESSOR AND COMPRESSOR RELAY, AND BETWEEN COMPRESSOR RELAY AND SUSPENSION CONTROL UNIT.

1) Check resistance between battery and compressor.
   (1) Disconnect fusible link and compressor connector.
   (2) Measure resistance between fusible link and compressor connector.

Connector & Terminal / Specified resistance:
Fusible Link — (B51) No. 1 / 0 Ω

   (3) Measure resistance between compressor connector and ground.

Connector & Terminal / Specified resistance:
(B51) No. 1 — Body / 1 MΩ min.

2) Check resistance between compressor and compressor relay.
   (1) Disconnect each connector.
   (2) Measure resistance between compressor connector and relay connector.

Terminal No. / Specified resistance:
(B51) No. 3 — (B22) No. 5 / 0 Ω

   (3) Measure resistance between relay connector and ground.

Connector & Terminal / Specified resistance:
(B22) No. 5 — Body / 1 MΩ min.

3) Check resistance between compressor relay and suspension control unit connector, and between compressor relay and ground.
   (1) Disconnect each connector.
   (2) Measure resistance between relay connector and suspension control unit connector, and relay connector and ground.

Connector & Terminal / Specified resistance:
(B22) No. 3 — (P38) No. 2 / 0 Ω
(B22) No. 3 — Body / 1 MΩ min.
(B22) No. 4 — Body / 0 Ω

D: TROUBLE CODE 9 — COMPRESSOR B —

CONTENT OF DIAGNOSIS:
- Open compressor relay coil circuit
- Faulty compressor
- Open wiring and faulty pressure switch

TROUBLE SYMPTOM:
- Compressor does not rotate to control suspension height.
- Compressor does not stop properly.

1-1	Check pressure switch for illumination when air tank is set in force-drive mode using select monitor.	Not OK	Replace suspension control unit.
1-2	Check voltage between suspension control unit and ground.		
	OK		
2	Check pressure switch.	Not OK	Replace pressure switch.
	OK		
3	Check pressure switch harness.	Not OK	Repair harness.
	OK		
4	Check air tank for leakage.	Not OK	Replace air tank.
	OK		
	Replace suspension control unit.		

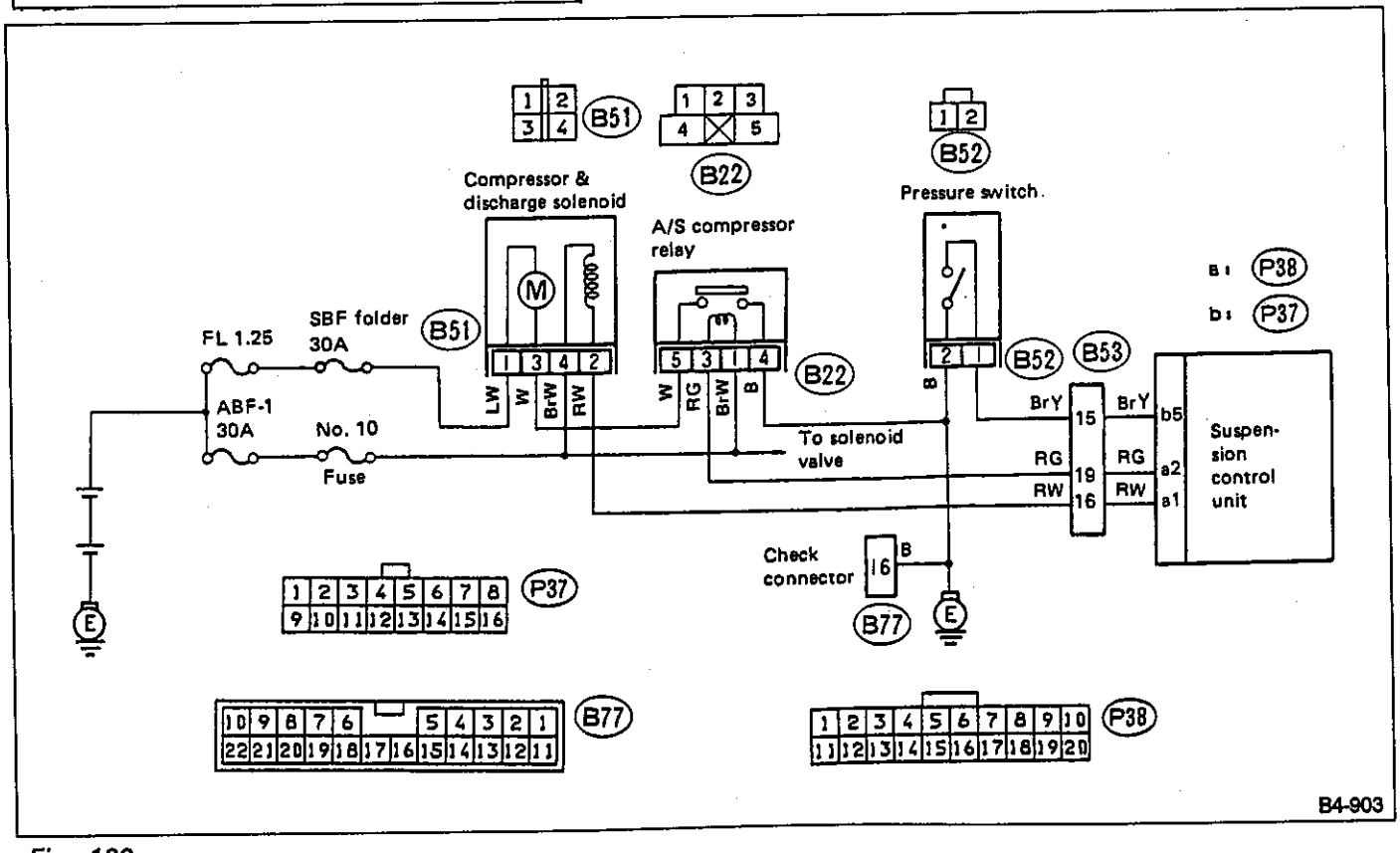

Fig. 139

1-1. CHECK PRESSURE SWITCH FOR ILLUMINATION WHEN AIR TANK IS SET IN FORCE-DRIVE MODE USING SELECT MONITOR.

1) Connect select monitor.
2) Check pressure switch for illumination when select mode is set in FA1.

Specifications:
Normal (if LED comes on)

3) If LED No. 1 does not come on, discharge air in force- drive mode until the LED comes on.
4) Forcefully charge and then discharge air from air tank.
5) Forcefully charge air to air tank to ensure that the LED comes on.

Specifications:
Normal (if LED goes out at least five minutes after air has been forcefully charged.)

1-2. CHECK VOLTAGE BETWEEN SUSPENSION CONTROL UNIT AND GROUND.

1) Turn ignition switch ON.
2) Measure voltage between suspension control unit connector and ground.

Connector & Terminal / Specified voltage:
(P37) No. 5 — Body (ground) /
0 V (Pressure low, switch ON)
(P37) No. 5 — Body (ground) /
10 — 12 V (Pressure high, switch OFF)

2. CHECK PRESSURE SWITCH.

1) Disconnect pressure switch connector.
2) Connect circuit tester's probes to pressure switch terminals.
3) Measure resistance (which is manifested by ON and OFF operation of pressure switch) while changing pressure in air tank.

Specified resistance:
- **Switch OFF 941 kPa (9.6 kg/cm², 137 psi) / 1 MΩ min.**
- **Switch ON 765 kPa (7.8 kg/cm², 111 psi)/0 Ω**

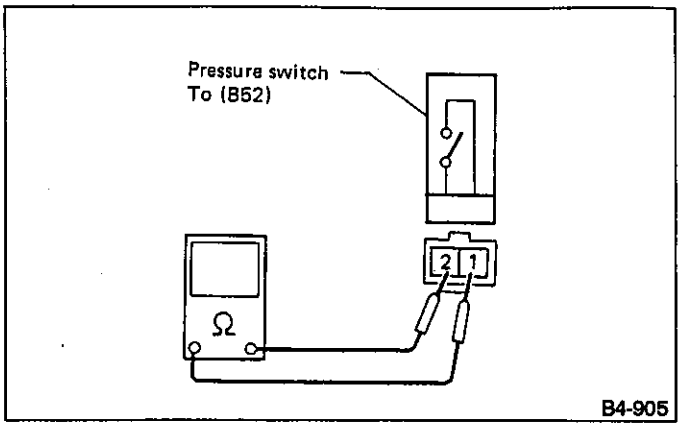

Fig. 140

3. CHECK PRESSURE SWITCH HARNESS.

1) Disconnect connectors from pressure switch and suspension control unit.
2) Measure resistance between pressure switch connector and suspension control unit connector.

Connector & Terminal / Specified resistance:
(B52) No. 1 — (P37) No. 5 / 0 Ω

3) Measure resistance between pressure switch connector and ground.

Terminal No. & Body / Specified resistance:
(B52) No. 1 — Body / 1 MΩ min.
(B52) No. 2 — Body / 0 Ω

4. CHECK AIR TANK FOR LEAKAGE. (Refer to [T5B4].)

E: TROUBLE CODE 10 — DISCHARGE SOLENOID VALVE —

CONTENT OF DIAGNOSIS:
Open discharge valve circuit or valve seizure

TROUBLE SYMPTOM:
- Suspension is not lowered when switch is set from "Hi" to "Normal."
- Suspension is not adjusted properly when occupants get out of vehicle.

When trouble code 10 is shown simultaneously with trouble code (5 - 8), check problem(s) corresponding with the number (5 - 8).

1	Forcefully charge and then discharge air from air tank using select monitor.	Not OK ↓	
2	Check discharge solenoid valve.	Not OK →	Replace solenoid valve.
		OK ↓	
3	Check harness between battery and discharge solenoid valve, and between discharge solenoid valve and suspension control unit.	Not OK →	Repair harness.
		OK ↓	
	Replace suspension control unit.		

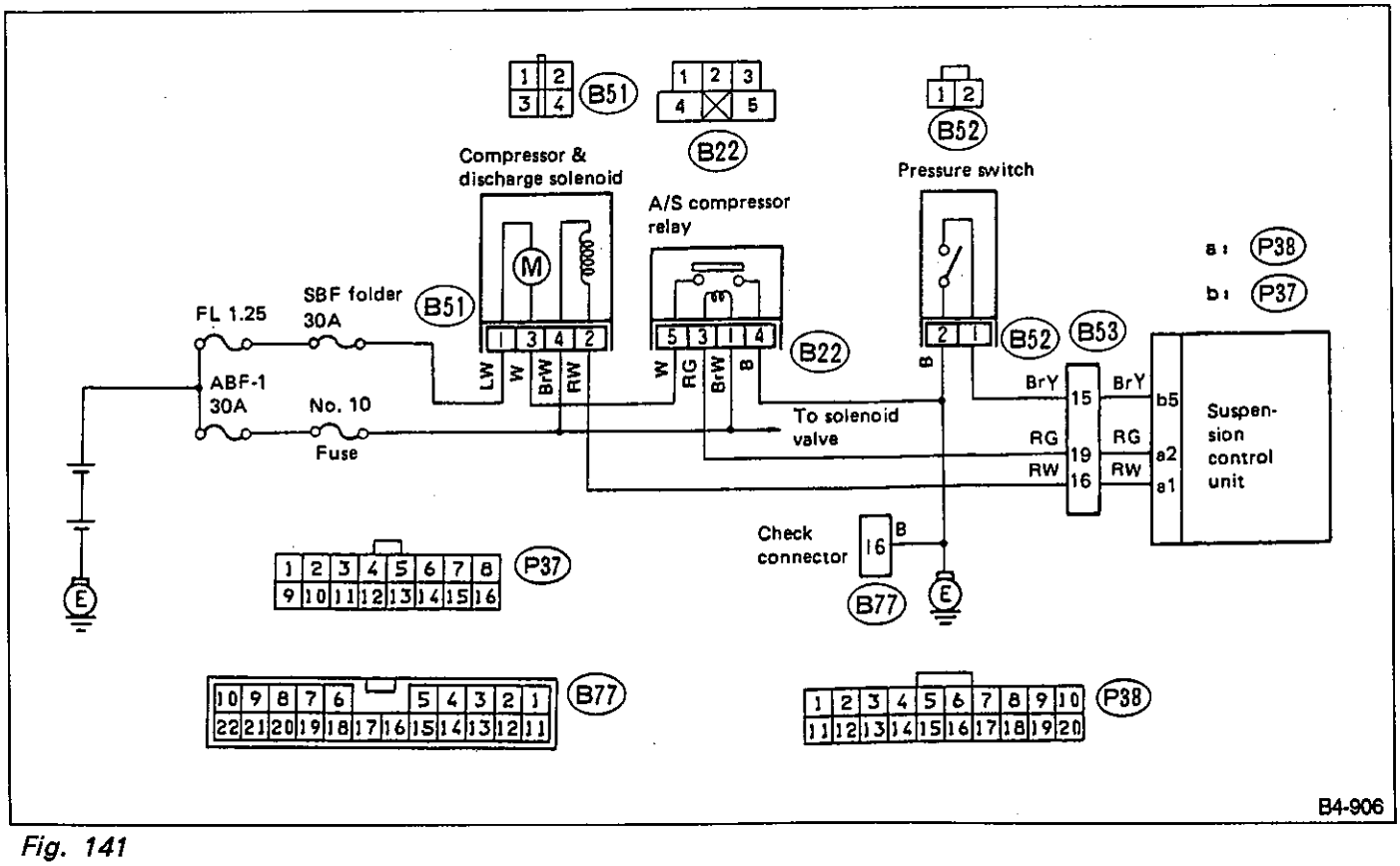

Fig. 141

1. FORCEFULLY CHARGE AND THEN DISCHARGE AIR FROM AIR TANK USING SELECT MONITOR.

1) Connect select monitor.
2) Forcefully charge and then discharge air from air tank using "function" code.
3) Forcefully discharge air from air tank (after charging air until pressure switch is OFF.)

Specifications:
Normal (if valve activates and sound which indicates discharge operation is emitted) (LED OFF)

2. CHECK DISCHARGE SOLENOID VALVE.

1) Disconnect connector from discharge solenoid valve.
2) Measure resistance between solenoid valve terminals.

Terminal / Specified resistance:
No. 2 — No. 4 / 25 — 35 Ω

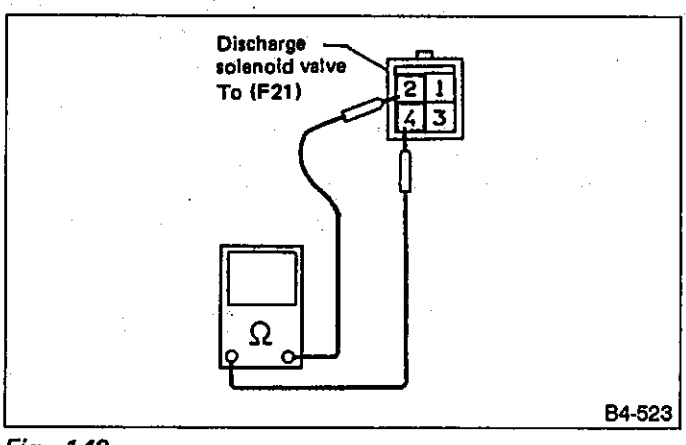

Fig. 142

3. CHECK HARNESS BETWEEN BATTERY AND DISCHARGE SOLENOID VALVE, AND BETWEEN DISCHARGE SOLENOID VALVE AND SUSPENSION CONTROL UNIT.

1) Check harness between battery and discharge solenoid valve.
   (1) Disconnect connector from solenoid valve connector.
   (2) Measure resistance between fuse (No. 10) terminal and solenoid valve connector.

Connector & Terminal / Specified resistance:
Fuse No. 10 — (B51) No. 4 / 0 Ω

   (3) Measure resistance between solenoid valve connector and ground.

Connector & Terminal / Specified resistance:
(B51) No. 4 — Body / 1 MΩ min.

2) Check harness between discharge solenoid valve and suspension control unit.
   (1) Disconnect each connector.
   (2) Measure resistance between discharge solenoid valve connector and suspension control unit connector.

Connector & Terminal / Specified resistance:
(B51) No. 2 — (P38) No. 1 / 0 Ω
(B51) No. 2 — Body / 1 MΩ min.

6. Troubleshooting with Select Monitor

A: FUNCTION OF SELECT MONITOR

Applicable cartridge: Type "H" (No. 498347700)

The select monitor directly monitors input and control data entered or stored in the ECU (electronic control unit) to judge the input-output state of respective sensors. It is also provided with a new force-drive function which forcefully activates sensors and solenoids.
The select monitor has three major functions (modes). Items to be monitored are designated by symbols as indicated below.
EXPLANATION OF SYMBOLS

F 0 1
- Code
- Mode

FA mode: Indicates ON-OFF operation of input-output signal in terms of ON-OFF operation of LED.
FB mode: Indicates trouble code in terms of numeral using self diagnosis.
FF mode: Shows, on display, a valve which is forcefully operated, and indicates the condition of height sensors based on LED blinks.

Function code	Item shown on display	Description
FA0	Input of height sensors and output of solenoid valve	Monitors and shows signals emitted from height sensors, as well as output to solenoid valve compressor relay.
FA1	Charge condition of air tank	Shows outputs to compressor relay and charge solenoid valve, as well as input emitted from pressure switch.
FA2	"Hi"/"Normal" mode	Shows "Hi" or "Normal" to indicate vehicle height.
FA3	Vehicle speed input pulse	Shows vehicle speed input pulse.
FB0	Diagnosis code	In either case described below, trouble code is shown: "Hi" and "Low" signals (for trouble code (1 — 4) are entered simultaneously. Same output signal (for trouble code (5 — 10) is continuously emitted for at least 10 minutes.
FFE	Force-drive mode	Particular wheel is forcefully moved up or down using select monitor. Solenoid valve corresponding with the wheel is shown by LED blinks. The height sensor condition is also shown.
FFA	Forced air charge-discharge (from air tank)	Air is forcefully charged or discharged from air tank using select monitor. The condition of pressure switch is shown by LED.
FFC	Force-drive mode "cancel"	Force-drive mode is canceled and replaced by next mode.
FFD	Force-drive mode "hold"	Forced drive mode is held.

B: FA MODE

FA0 HEIGHT SENSOR INPUT/SOLENOID VALVE OUTPUT

Measuring conditions	Content of diagnosis
Turn ignition switch ON. Turn height control switch ON/OFF. Move air suspension up/down, and set suspension to "Hi"/"Normal" position.	Whether or not height control sensor input and solenoid valve output are correct (while suspension height is being controlled and while it is not), suspension can be determined. LED1: FR (Hi) LED2: FR (Normal) LED3: RR (Hi) LED4: RR (Normal) LED6: FL (Hi) LED7: FL (Normal) LED8: RL (Hi) LED9: RL (Normal)

FA1 AIR CHARGE-DISCHARGE OF AIR TANK

Measuring conditions	Content of diagnosis
Turn ignition switch ON. Turn height control switch ON/OFF.	Input and output signals related to air tank are correct (when compressor does not rotate or when compressor does not stop properly after suspension height is controlled) compressor can be easily checked. LED 1 comes on when pressure switch is ON.

FA2 VEHICLE HEIGHT MODE

Measuring conditions	Content of diagnosis
Turn ignition switch ON. Turn height control switch ON/OFF.	Height control switch may or may not emit proper ON/OFF signals. LED 1 comes on while height control switch is pressed.

FA3 VEHICLE SPEED PULSE INPUT DISPLAY

Measuring conditions	Drive vehicle to check.
Drive vehicle to check.	"Hi" control is automatically released when vehicle speed is at least 90 km/h (55 MPH). Whether or not optional vehicle speed is reached [when vehicle speed is less than 60 km/h (40 MPH)], proper operation of pulse input display can be determined. When vehicle speed is at least 10 km/h (6 MPH), LED 1 comes on.

C: FB MODE

FB0 DIAGNOSIS CODE DISPLAY

Measuring conditions	Content of diagnosis
Turn ignition switch ON.	When warning light blinks, the cause can be easily located. When multiple problems occur, they are shown, one at a time, every 2 seconds, in the order enumerated below.

Diagnosis code	Problem item	
1	Sensor	FR
2		FL
3		RR
4		RL
5	Solenoid valve	FR
6		FL
7		RR
8		RL
9	Compressor	
10	Discharge valve	

〈For reference〉
"NO TROUBLE" is displayed when there is no problem.

D: FF MODE (Direct key-in only can be entered)

FFE FORCE DRIVE MODE

Force drive mode cannot be activated under any of the following conditions:

- Ignition switch OFF
- Select monitor in diagnosis mode
- Vehicle speed pulse ON [vehicle speed of at least 5 km/h (3 MPH)]

Measuring conditions	Content of diagnosis
Turn ignition switch ON. Select the direction in which suspension is to be moved UP: "0" and "ENT" DOWN: "1" and "ENT" Select wheel to be checked. FR wheel: "4" and "ENT" FL wheel: "0" and "ENT" RR wheel: "5" and "ENT" RL wheel: "1" and "ENT"	A faulty solenoid valve and height sensor is easily located. **While suspension is being moved up, it cannot be moved down, or vice versa.** Solenoid valve which is in motion is shown by LED blinks. LED also shows condition of height sensor.

FFA FORCED AIR CHARGE-DISCHARGE

Measuring conditions	Content of diagnosis
Turn ignition switch ON. Select "charge" or "discharge" of air required. Forced air discharge: "0" and "ENT" Forced air charge: "1" and "ENT"	A faulty charge or discharge valve, or pressure switch are easily determined. **While air is being charged in force mode, air cannot be discharged in force mode, and vice versa.** Forced air charge Compressor relay and charge solenoid valve activate to charge air tank with air. Air charge stops when pressure switch is turned OFF. LED 1 comes on when pressure switch is turned ON. Forced air discharge Discharge solenoid valve and charge solenoid valve activate to discharge air from air tank. Air discharge stops when pressure switch is turned ON. LED 1 goes out when pressure switch is turned OFF.

7. General Troubleshooting Table for Air Suspension

Symptom	Item to check / Symptom in brief	Faulty suspension control unit	Faulty height control switch	Faulty height control sensor	Open solenoid valve circuit or seized valve	Faulty compressor	Faulty pressure switch	Faulty vehicle speed sensor	Leaking or clogged air line	Air leakage at air suspension ASSY	Improper solenoid valve seal	Leakage at air tank	Leakage at strut mount	NOTE
Suspension height unchanged	Suspension height does not change when height control switch is pressed with engine ON.	3	1	②	④	⑥	⑦		5					*1
	Suspension height does not change automatically.	2		①	③									
	Suspension height does not return to normal from high position while driving at greater than 90 km/h (55 MPH).	2		①				3						
Repeated changes of suspension height	Suspension repeatedly moves up and down regardless of height control switch.	1	2	④						4				
Increase in suspension height	Suspension height increases when height control switch is not turned ON.	1	2											*2
	Suspension reaches normal height after ignition switch has been turned ON for at least 5 minutes. (Suspension is held low when ignition switch is OFF.)								1			2		
Decrease in suspension height	Suspension height abnormally decreases shortly after ignition switch has been turned OFF.									3	1		2	
Faulty compressor	Compressor frequently rotates.	6			②	⑤	①		4			3		*3
	Compressor does not rotate after suspension control has been adjusted with height control switch set "ON".	3				②	①							*4

- **Figures shown in table refer to the order of inspection priority.**
- **"O" (circle) is shown in SELF DIAGNOSIS.**
- **Diagnosis items to be checked include their circuits.**

***1 There are no problems under any of the following conditions when operation does not occur. (No indicator blinking)**
- **During turns**
- **One wheel only is stuck or rides over an obstacle (as when driving on snowy roads, etc.). This can be corrected when driving on a flat road again.**
- **Driving at more than 90 km/h (55 MPH).**
- **If suspension height is changed at short intervals more than 6 times within 10 minutes, it is reset to original position when ignition switch is turned OFF.**

***2 When vehicle speed reaches approximately 90 km/h (55 MPH), suspension automatically returns to "Normal" position; when it drops below 60 km/h (40 MPH), suspension automatically returns to "Hi" position. This is not an indication of abnormalities.**

***3 Compressor frequently rotates if vehicle has been left unattended with engine ON for more than 5 minutes.**

***4 When compressor temperature increase due to frequent operation, circuit breaker activates to stop compressor. Compressor will rotate again when its temperature decreases.**

SUBARU®

1992

SERVICE MANUAL

	Page
M MECHANISM AND FUNCTION	2
1. Front Axle	2
2. Rear Axle	4
3. Disc Wheel and Wheel Cap	6
S SPECIFICATIONS AND SERVICE DATA	7
C COMPONENT PARTS	10
1. Front Axle	10
2. Rear Axle (4WD)	11
W SERVICE PROCEDURE	13
1. Front Axle	13
2. Rear Axle (4WD)	19
3. Rear Axle (FWD)	25
4. Front and Rear Drive Shafts	28
5. Half Wheel Cap	33
6. Full Wheel Cap	34
7. Steel Wheel and Tire	34
8. Aluminum Wheel	35
9. Wheel Balancing	35
10. Installation of Wheel Assembly to Vehicle	35
11. Tire Rotation	36

M MECHANISM AND FUNCTION

1. Front Axle

A: GENERAL

The inboard end of the axle shaft is connected to the transmission via a constant velocity joint (Double Offset Joint: DOJ) which provides flexible capabilities in the longitudinal direction while the outboard end is supported by taper roller bearings located inside the housing via a under cut free joint (UFJ) which features a large operating angle.

Since the drive shaft employs constant velocity joints, it provides smooth, even rotation of the drive wheels without any vibration.

The bearing utilizes a preloaded, non-adjustable tapered roller unit design.

The hub is fitted to the tapered roller bearing inside the housing. The UFJ's spindle is "serration-fitted" to the hub and is clinched to it with axle nuts. After front axle parts have been repaired, toe-in should be adjusted.

The disc rotor is an external mounting type. It is secured together with the disc wheel using hub bolts to facilitate maintenance of the disc rotor.

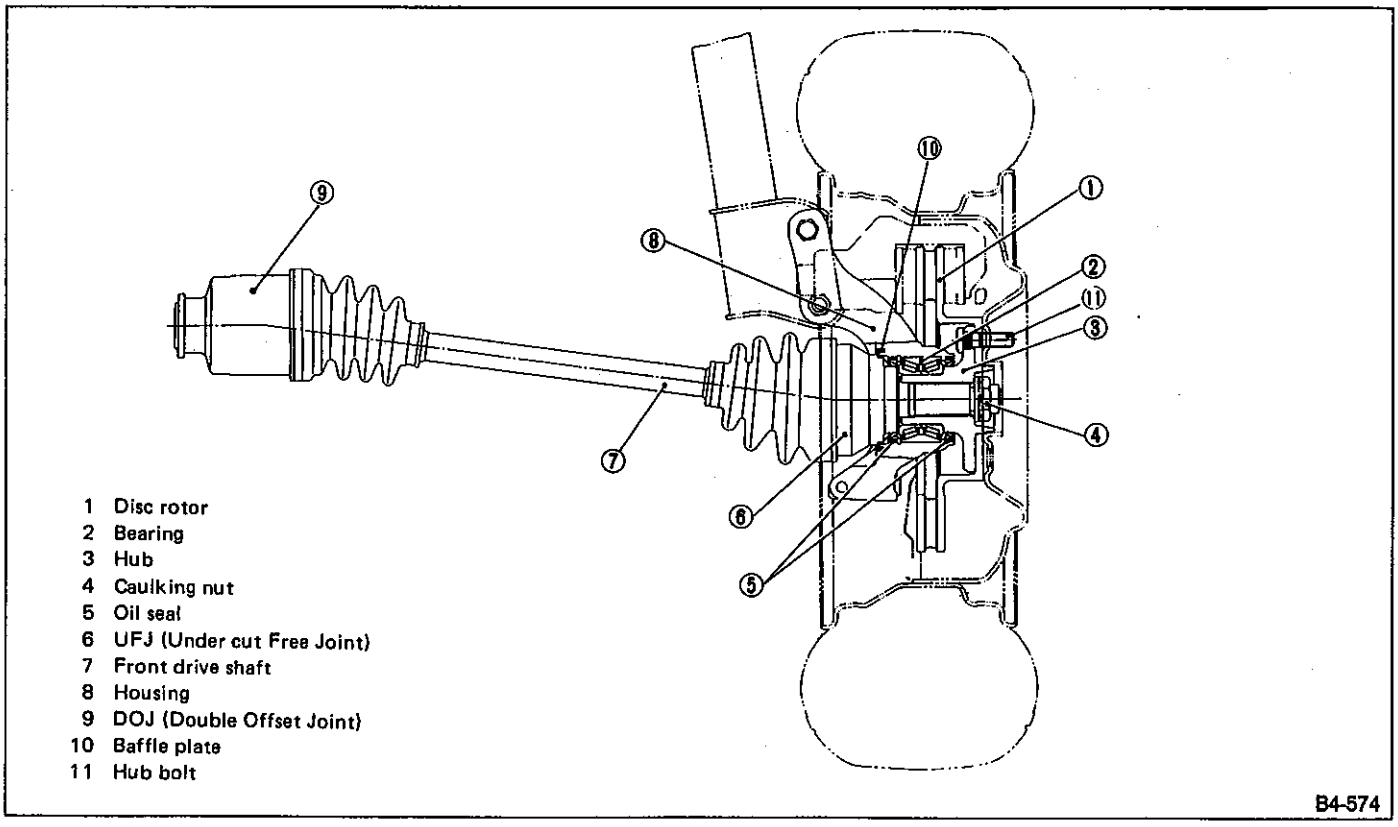

Fig. 1

B: FRONT DRIVE SHAFT

The constant-velocity joint on the differential side is a double offset (DOJ) type which can be disassembled for maintenance. It provides the maximum operating angle of 23° and can also be moved in the axial direction.
The constant-velocity joint on the tire side is an extrawide, undercut free type (UFJ) which provides a maximum operating angle of 50°.

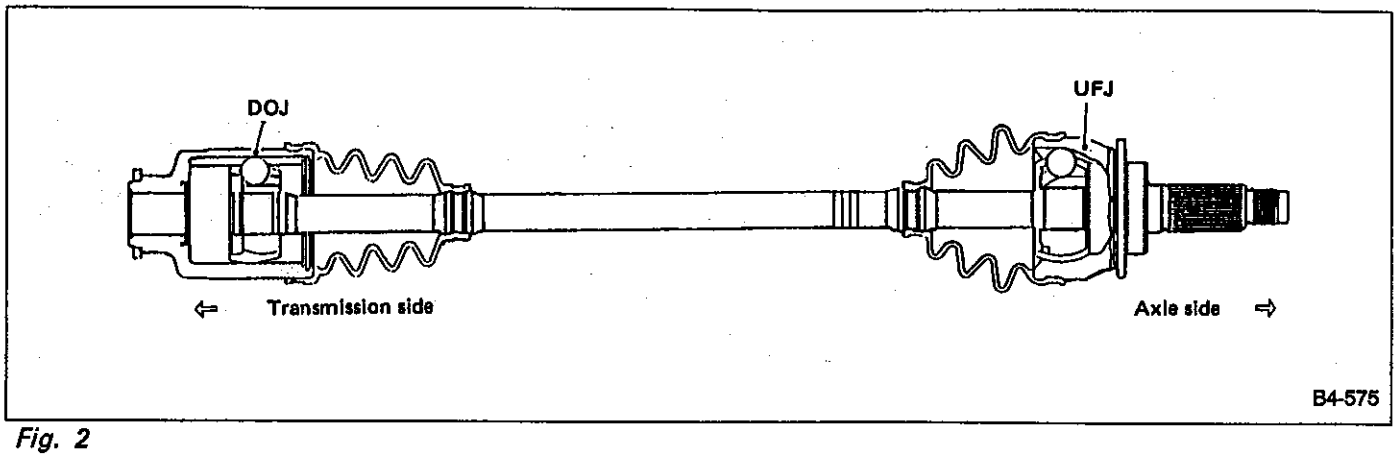

Fig. 2

1. CONSTRUCTION OF UNDERCUT-FREE JOINT (UFJ)

The component parts of the UFJ are the same as those used with the BJ; however, the only difference between the two occurs in the shape of the track where the torque transmission ball rolls. The BJ's track is an arc type (as from the cross-sectional contour) while the UFJ's track is a combination of a straight line and arc.
When viewed from the axial center of the shaft, the UFJ has no undercut (shown by shaded area) portions so that it's bending angle can be increased.
The UFJ has undergone modifications to increase the ball diameter and redesign the joint interior. Although its maximum bending angle is increased to 50° (rather than 46.5° for the BJ), the UFJ is at least at strong and durable as the BJ.

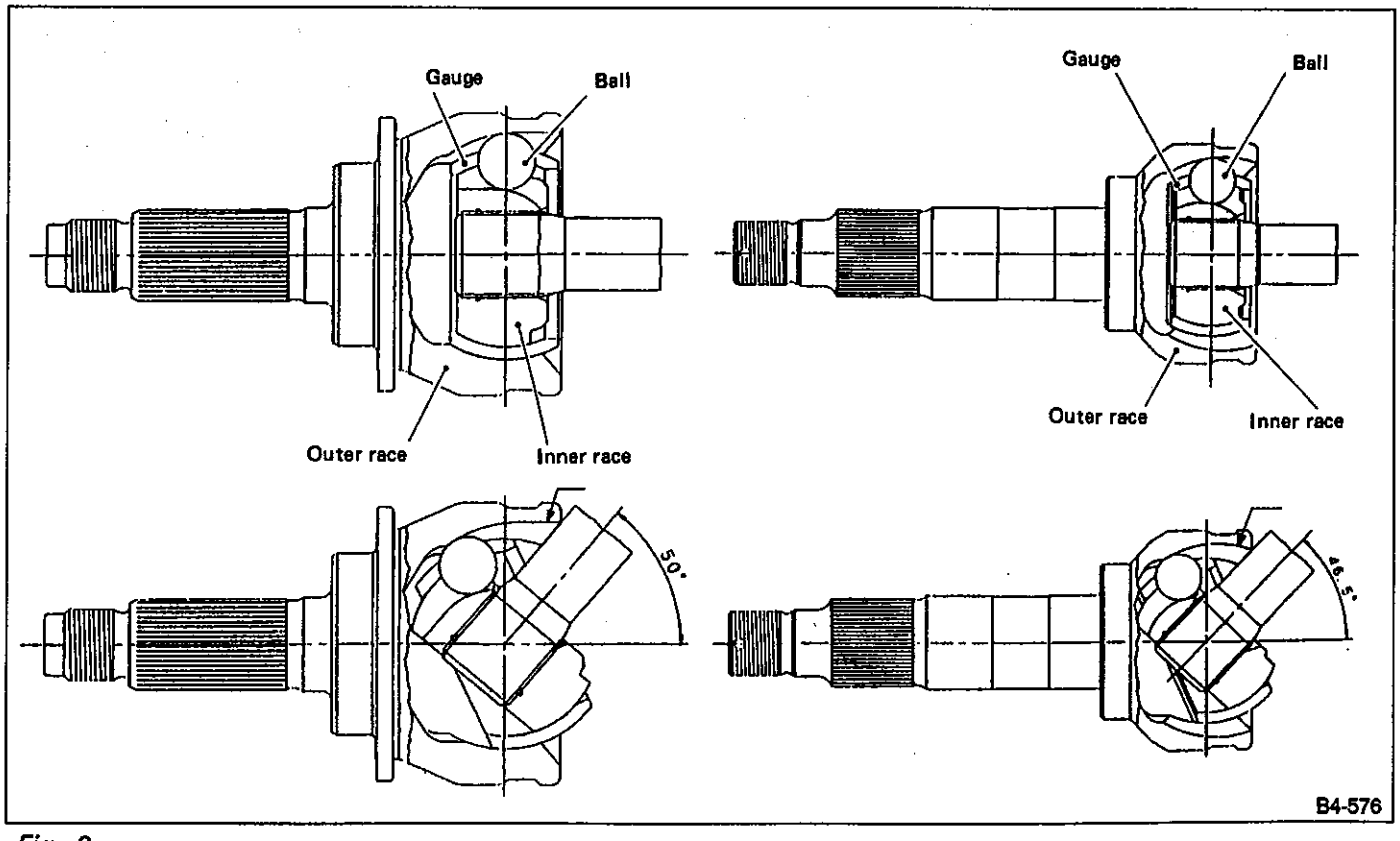

Fig. 3

2. Rear Axle

A: GENERAL

1. 4WD

The inboard end of the axle shaft is connected to the transmission via a constant velocity joint (Double Offset Joint: DOJ) which provides flexible capabilities in the longitudinal direction. The outboard end is supported by taper roller bearings located inside the housing via a bell joint (BJ) which features a large operating angle. Since the drive shaft employs constant velocity joints, it provides smooth, even rotation of the drive wheels without any vibration.
The bearing is a preloaded, non-adjustable tapered roller unit type.
The hub is fitted to the tapered roller bearing inside the housing. The BJ's spindle is "serration-fitted" to the hub and is clinched to it with axle nuts.
The disc rotor is externally mounted to facilitate maintenance. Hub bolts and axle nuts are also used to secure the front axle.

2. FWD

The hub and bearing are combined as a single unit and cannot be disassembled. The bearing is an angular contact ball type which does not require preload adjustment.
The disc rotor is externally mounted to facilitate maintenance.

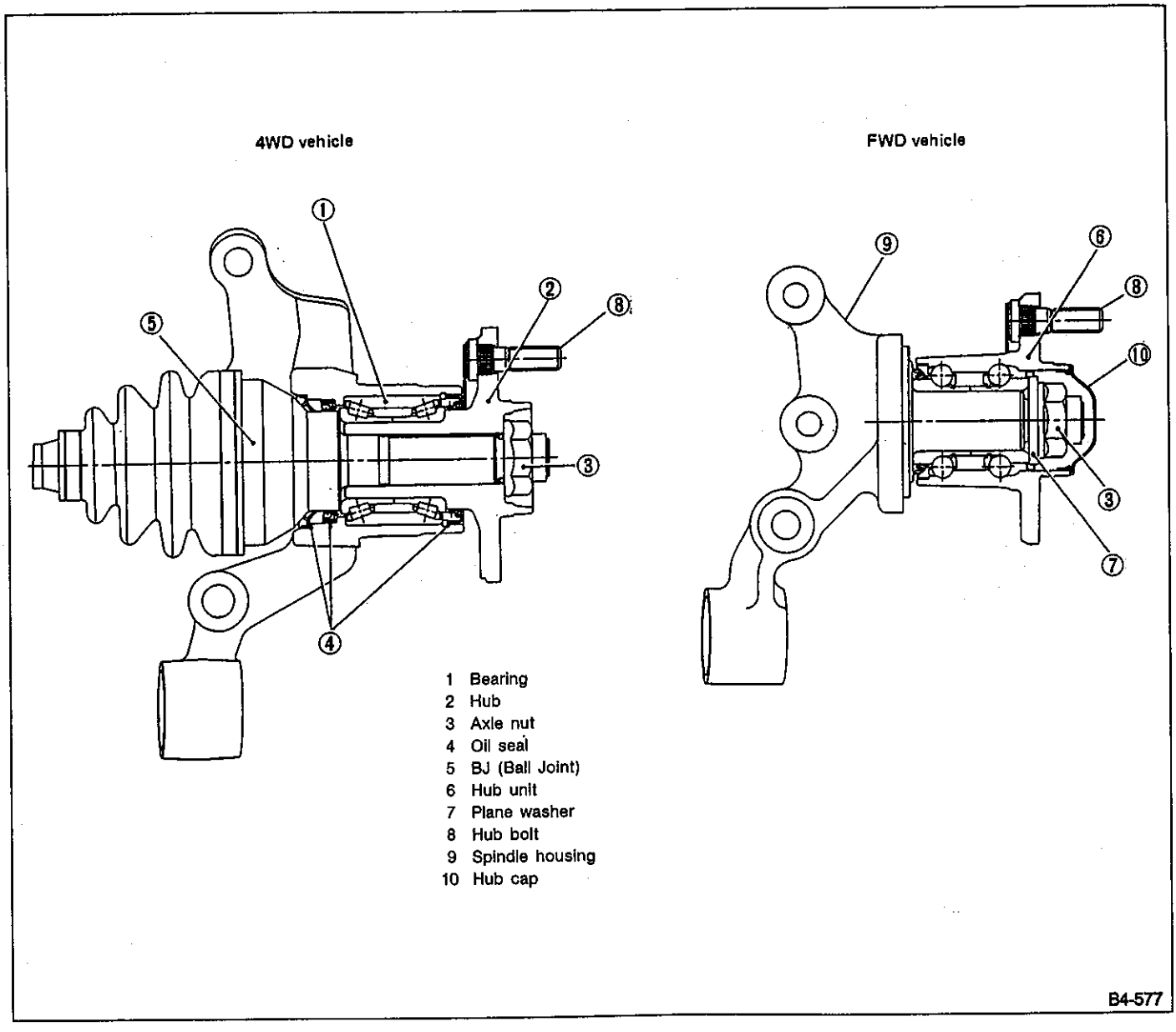

Fig. 4

B: REAR DRIVE SHAFT

The constant-velocity joint on the differential side is a double offset type (DOJ) which can be disassembled for maintenance. It provides the maximum operating angle of 23° and can be moved in the axial direction. The constant-velocity joint on the tire side is a bell type (BJ) which provides a maximum operating angle of 46°.

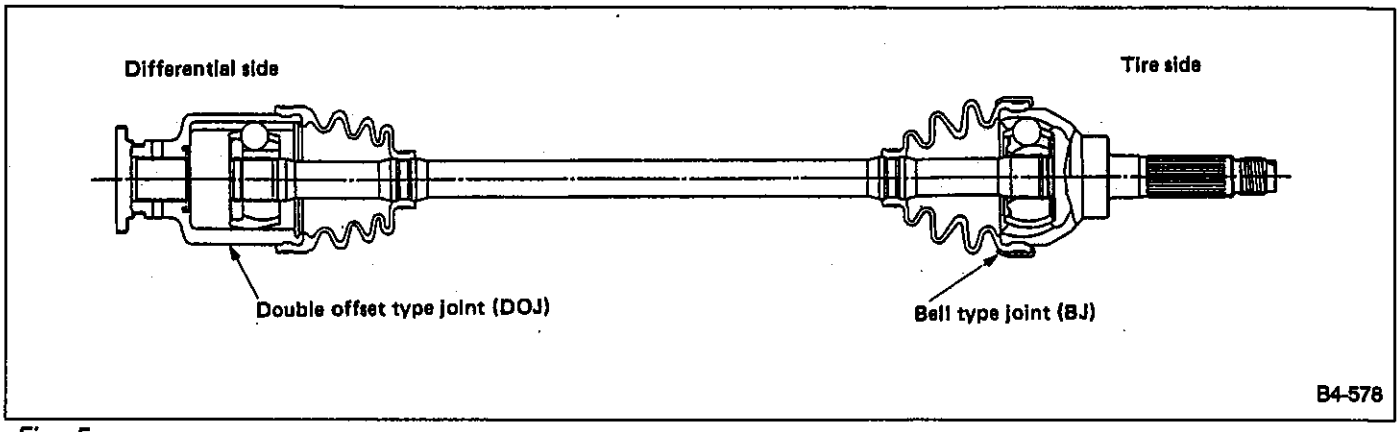

Fig. 5

3. Disc Wheel and Wheel Cap

A: GENERAL

1. DISC WHEEL (Steel)

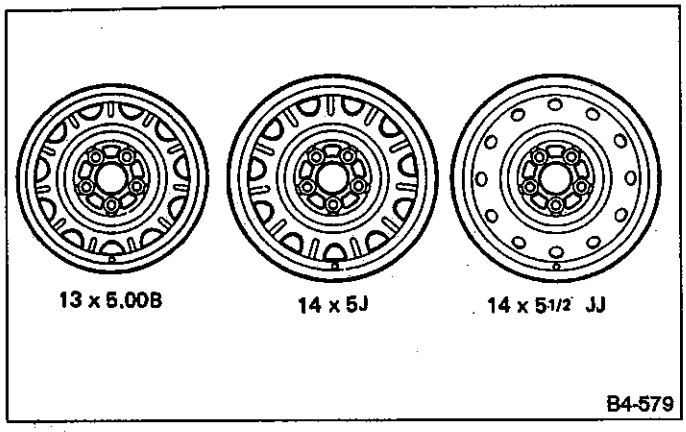

Fig. 6

2. ALUMINUM ALLOY WHEEL

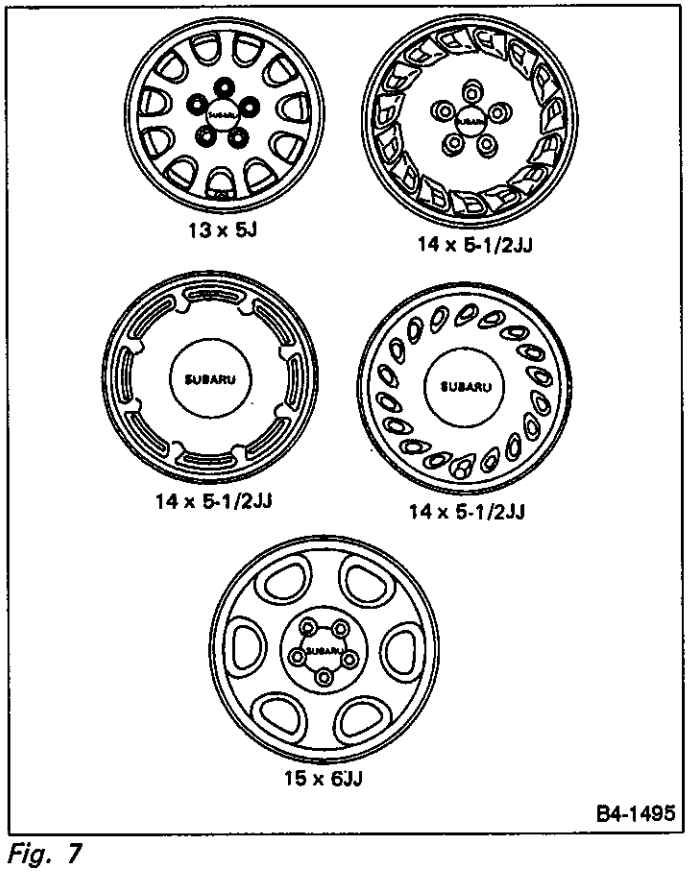

Fig. 7

3. HALF CAP

The half cap is engaged by snapping its eight pawls into the grooves on the flange located in the center of the steel wheel.
The half cap can be installed by pushing it on with both hands and removed by prying it off with a lever (furnished with tool kit).

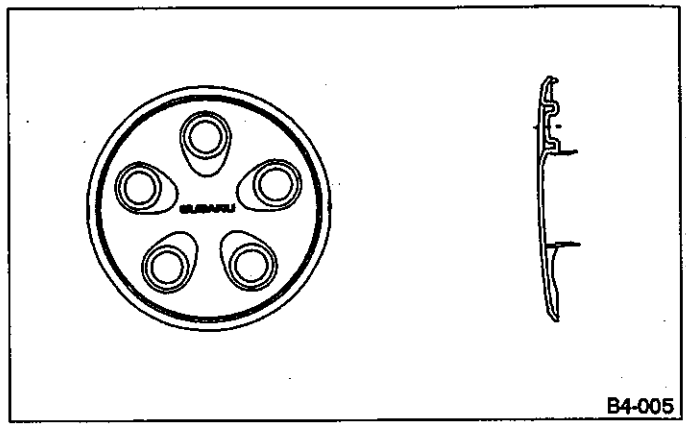

Fig. 8

4. FULL WHEEL CAP

The full wheel cap is engaged with the rim by means of its eight wire-spring legs. It can be installed by pushing it on with both hands and removed by prying it off with a lever (furnished with tool kit).

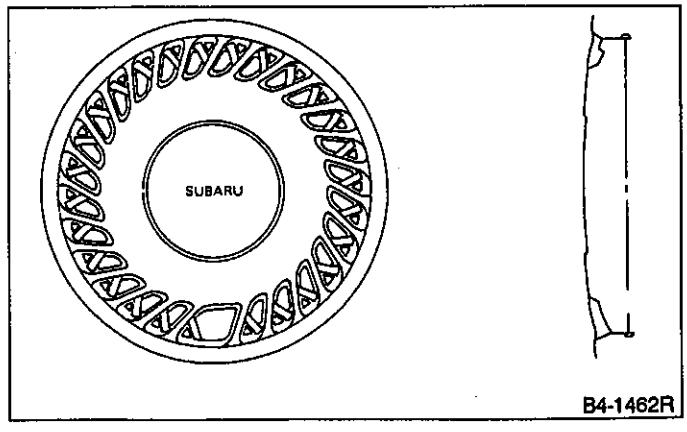

Fig. 9

S SPECIFICATIONS AND SERVICE DATA

A: SPECIFICATIONS

1. TIRE & WHEEL SIZE

Front and Rear				Spare
Tire size	Rim size	Rim offset mm (in)	PCD mm (in)	
165SR13 165HR13 165R13 82S 165R13 82S	13 × 5.00B 13 × 5J	50 (1.97)	100 (3.94) dia.	Same as front and rear tires and rims
175/70R14 84S 175/70R14 84T 175/70R14 84H	14 × 5J 14 × 5 1/2JJ	55 (2.17)	100 (3.94) dia.	
185/70R14 87H 185/70R14 88H	14 × 5J 14 × 5 1/2JJ	55 (2.17)	100 (3.94) dia.	
205/60R15 91V	15 × 6JJ	55 (2.17)	100 (3.94) dia.	

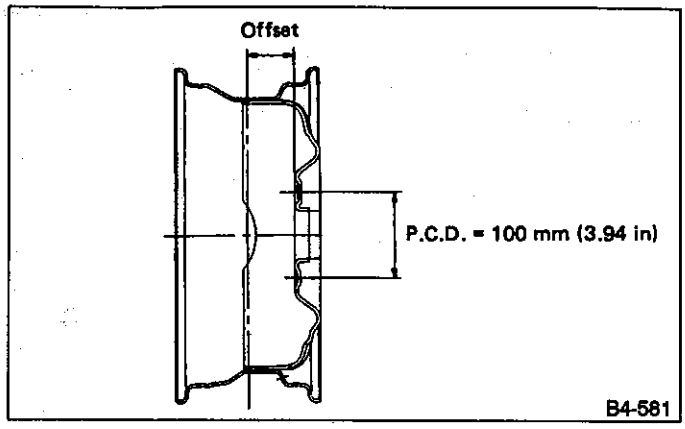

Fig. 10

2. TIRE INFLATION PRESSURE

Model	Tire size	Tire inflation pressure kPa (kg/cm², psi)	
		Light load	Full load
4-door Sedan Station Wagon	165SR13 165HR13 165R13 82S 165R13 82T	Ft: 210 (2.1, 30) Rr: 200 (2.0, 29)	Ft: 230 (2.3, 33) Rr: 230 (2.3, 33)
	175/70R14 84S 175/70R14 84T 175/70R14 84H	Ft: 210 (2.1, 30) Rr: 200 (2.0, 29)	Ft: 240 (2.4, 35) Rr: 250 (2.5, 36)
	185/70R14 87H 185/70R14 88H	Ft: 210 (2.1, 30) Rr: 200 (2.0, 29)	
4-door Sedan Turbo	205/60R15 91V	Ft: 210 (2.1, 30) Rr: 200 (2.0, 29)	
Touring Wagon	185/70R14 87H 185/70R14 88H	Ft: 210 (2.1, 30) Rr: 200 (2.0, 29)	Ft: 210 (2.1, 30) Rr: 230 (2.3, 33)
Touring Wagon Turbo	205/60R15 91V	Ft: 210 (2.1, 30) Rr: 200 (2.0, 29)	Ft: 210 (2.1, 30) Rr: 220 (2.2, 31)

3. FRONT DRIVE SHAFT ASSEMBLY

Type of axle shaft ASSY	SHAFT			DOJ
	No. of identification paddings on shaft	Distance between inner and outer boots (L) mm (in)	Diameter (D) mm (in)	No. of spline teeth
82AC-25	1 (One)	308 (12.13)	21.5 (0.846)	25
87AC-23	2 (Two)	277 (10.91)	22.5 (0.886)	23
87AC-25	2 (Two)	277 (10.91)	22.5 (0.886)	25
95AC-25	3 (Three)	260 (10.24)	24 (0.94)	25

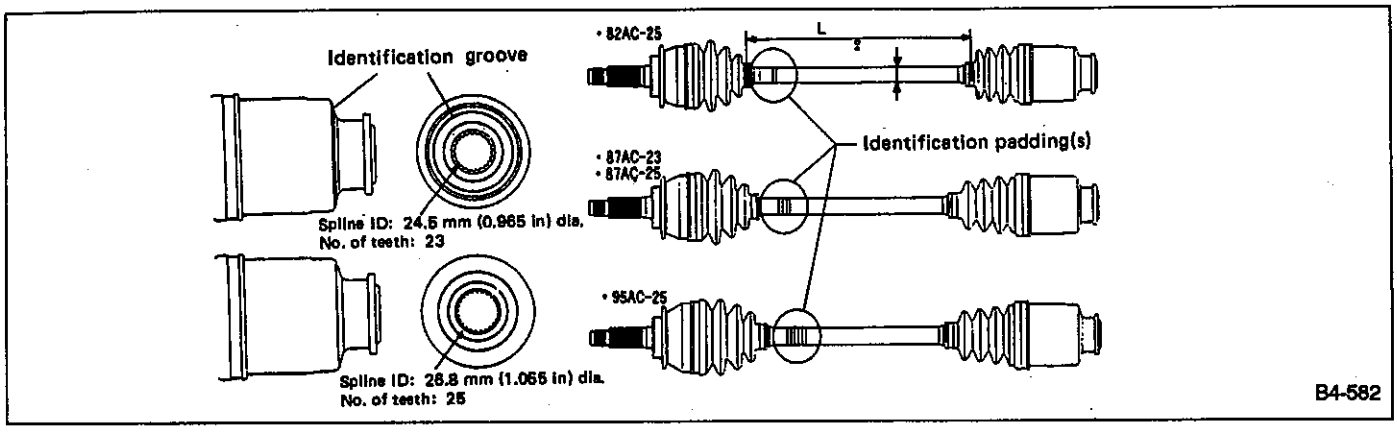

Fig. 11

4. REAR DRIVE SHAFT ASSEMBLY (4WD)

Type of axle shaft ASSY	SHAFT			
	No. of identification paddings on shaft	Distance between inner and outer boots (L) mm (in)	Diameter (D) mm (in)	
			D_1	D_2
82AC-RH	1 (One)	304 (11.97)	21.2 (0.835)	24 (0.94)
82AC-LH		294 (11.57)		21.2 (0.835)
87AC-RH	2 (Two)	277 (10.91)	22.22 (7/8)	25 (0.98)
87AC-LH		267 (10.51)		22.22 (7/8)

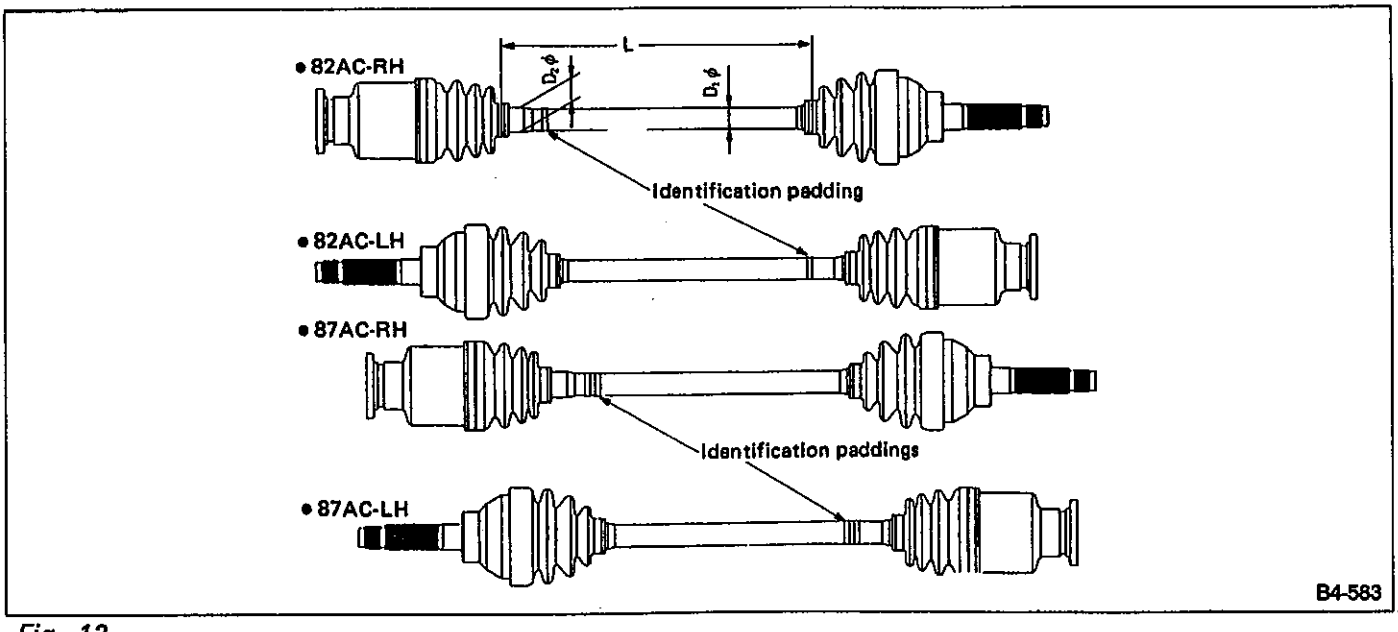

Fig. 12

5. APPLICATION TABLE

	Power unit	Front drive shaft			Rear drive shaft
		5MT	3AT	4AT	
FWD	1800cc	87AC-23	87AC-23	87AC-25	—
	2000cc, 2200cc	95AC-25	—	95AC-25	—
4WD	1800cc	Selective: 87AC-25 Full time: 82AC-25	—	82AC-25	82AC-RH 82AC-LH
	2000cc	Selective: 95AC-25 Full time: 82AC-25	—	82AC-25	82AC-RH 82AC-LH
	2200cc	87AC-25	—	87AC-25	87AC-RH 87AC-LH
	Turbo	87AC-25	—	—	87AC-RH 87AC-LH

B: SERVICE DATA

Item				Standard	Service Limit
Wheel balancing	Dynamic unbalance			Less than 5 g (0.18 oz)	
	Balance weight part number				
		For steel wheel	Weight g (oz)	For aluminum wheel	
		28101AA001	5 (0.18)	23141GA462	
		28101AA011	10 (0.35)	23141GA472	
		28101AA021	15 (0.53)	23141GA482	
		28101AA031	20 (0.71)	23141GA491	
		28101AA041	25 (0.88)	23141GA501	
		28101AA051	30 (1.06)	23141GA511	
		28101AA061	35 (1.23)	23141GA521	
		28101AA071	40 (1.41)	23141GA531	
		28101AA081	45 (1.59)	23141GA541	
		28101AA091	50 (1.76)	23141GA551	
		28101AA101	55 (1.94)	–	
		28101AA111	60 (2.12)	23141GA571	

C COMPONENT PARTS

1. Front Axle

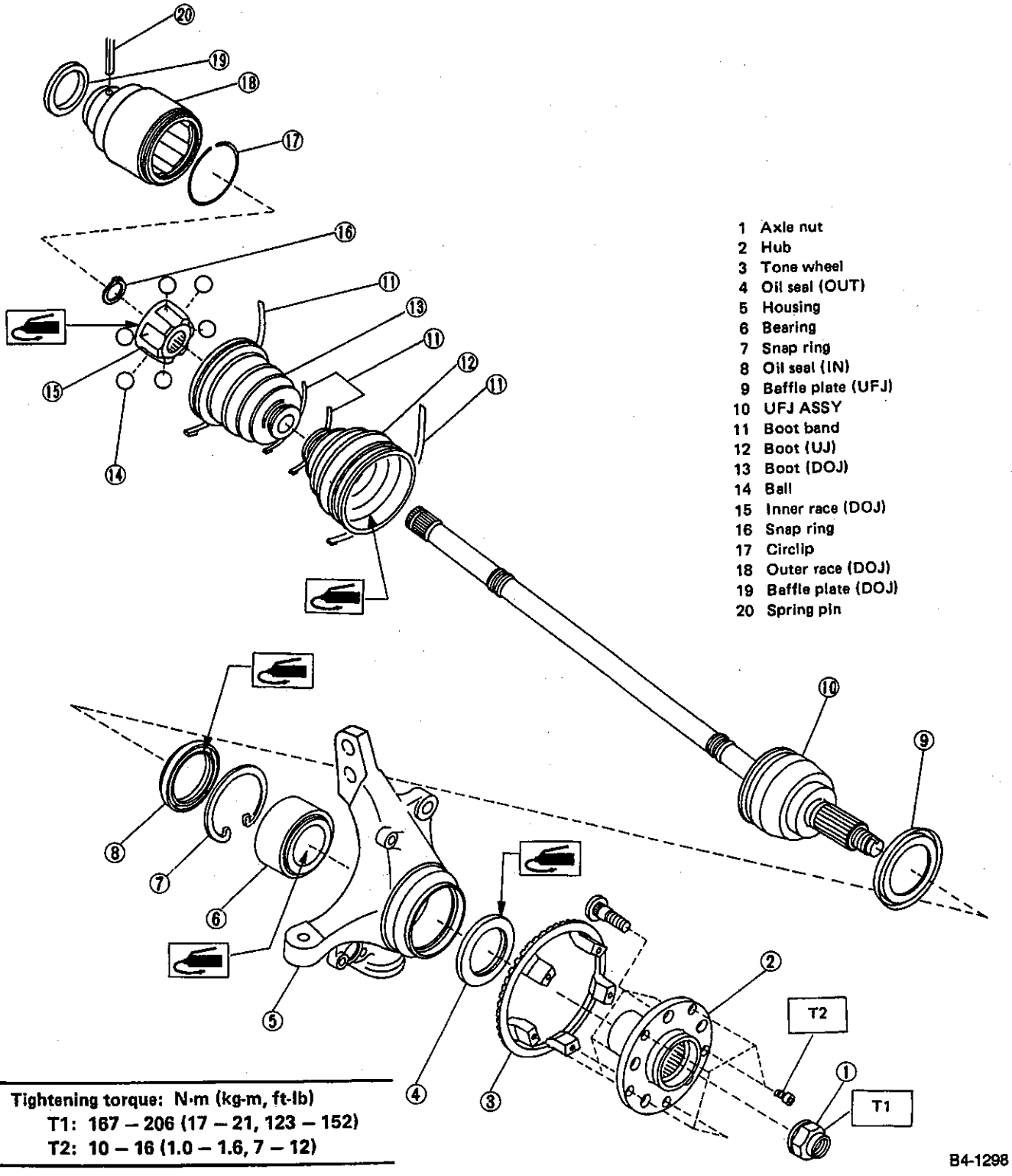

Tightening torque: N·m (kg-m, ft-lb)
T1: 167 – 206 (17 – 21, 123 – 152)
T2: 10 – 16 (1.0 – 1.6, 7 – 12)

Fig. 13

2. Rear Axle (4WD)

1. 4WD

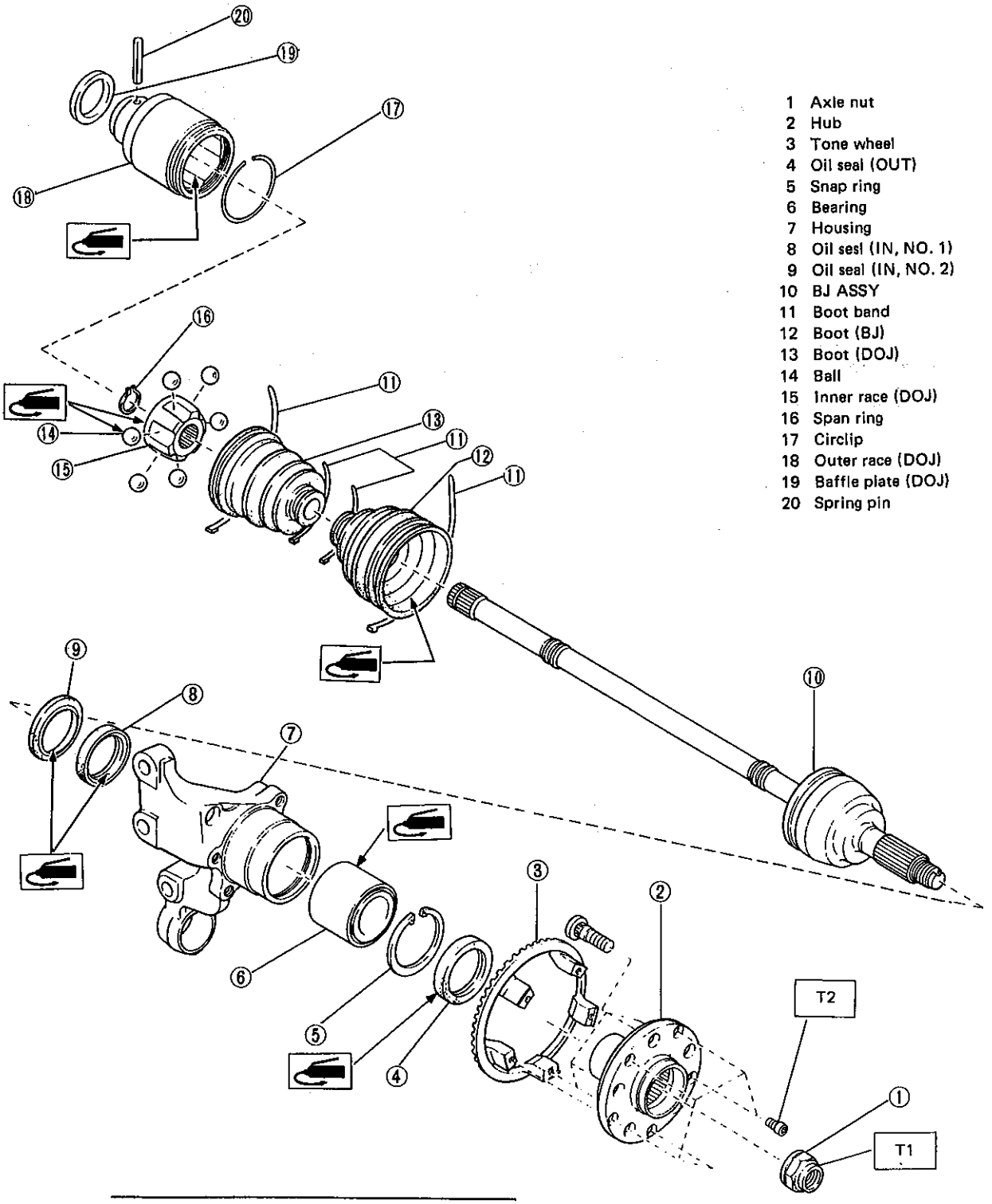

1 Axle nut
2 Hub
3 Tone wheel
4 Oil seal (OUT)
5 Snap ring
6 Bearing
7 Housing
8 Oil sesl (IN, NO. 1)
9 Oil seal (IN, NO. 2)
10 BJ ASSY
11 Boot band
12 Boot (BJ)
13 Boot (DOJ)
14 Ball
15 Inner race (DOJ)
16 Span ring
17 Circlip
18 Outer race (DOJ)
19 Baffle plate (DOJ)
20 Spring pin

B4-585

Fig. 14

Tightening torque: N·m (kg·m, ft-lb)
T1: 167 – 206 (17 – 21, 123 – 152)
T2: 10 – 16 (1.0 – 1.6, 7 – 12)

2. FWD

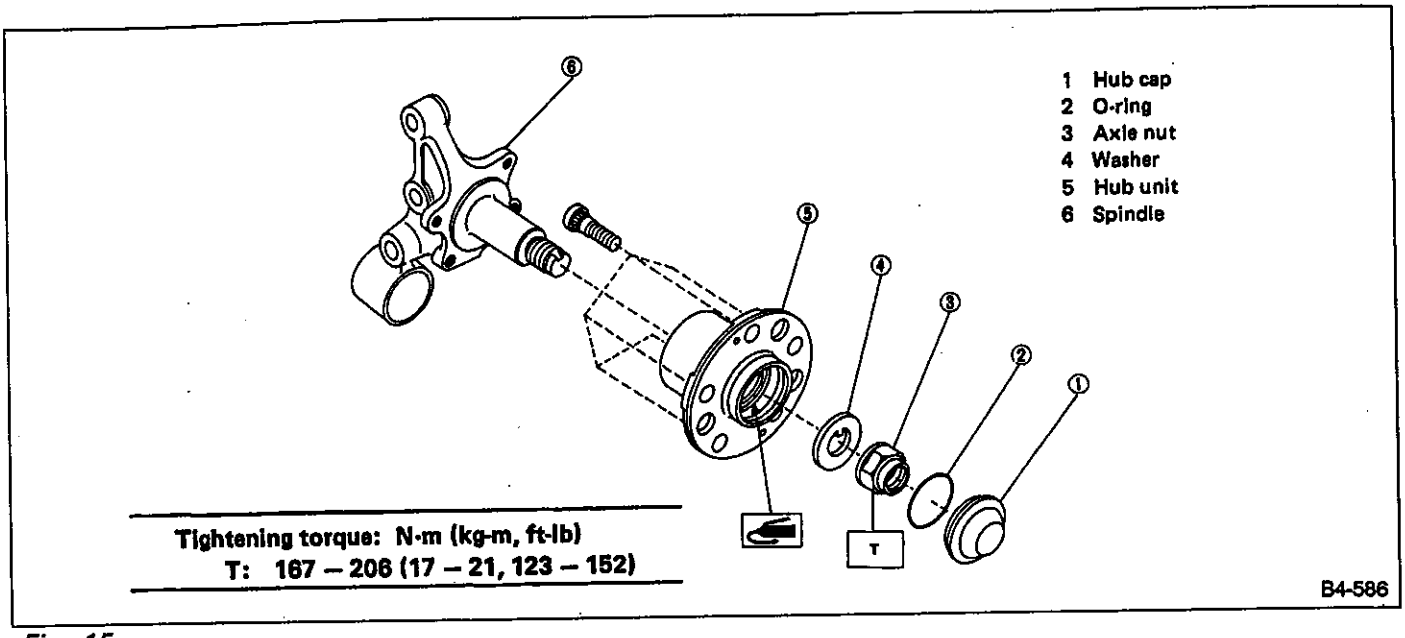
1 Hub cap
2 O-ring
3 Axle nut
4 Washer
5 Hub unit
6 Spindle
T
Tightening torque: N·m (kg-m, ft-lb)
T: 167 – 206 (17 – 21, 123 – 152)
B4-586

Fig. 15

W SERVICE PROCEDURE

1. Front Axle

A: REMOVAL

1) Disconnect ground cable from battery.
2) Jack up vehicle, support it with safety stands, and remove front wheels.
3) Unlock axle nut.
4) Remove axle nut using a socket wrench.

Be sure to loose and retighten axle nut after removing wheel from vehicle. Failure to follow this rule may damage wheel bearings.

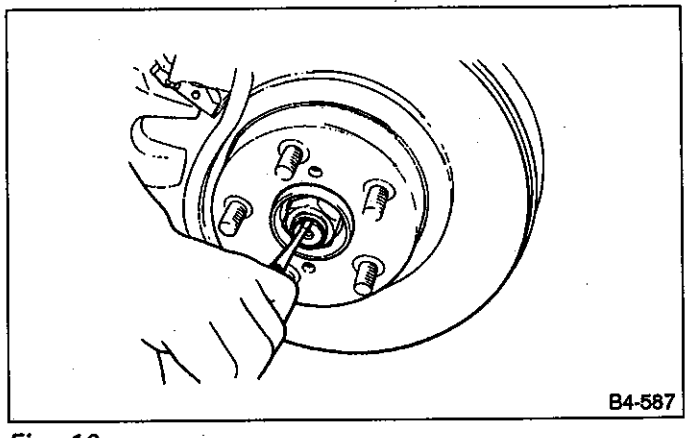

Fig. 16

5) Remove transverse link from front crossmember.

Discard old self-locking nut. Replace with a new one.

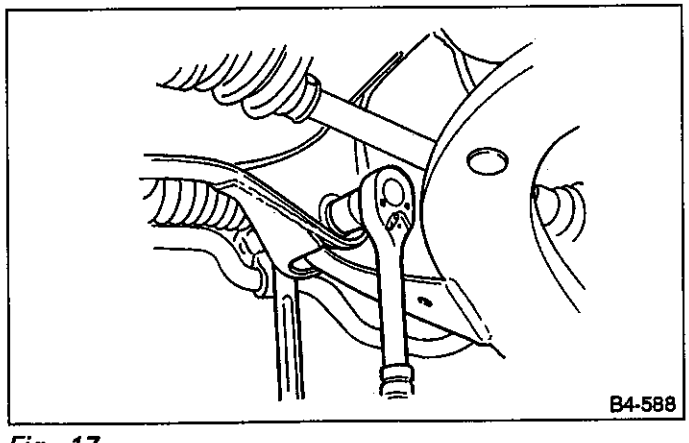

Fig. 17

6) Remove spring pin which secures transmission spindle to DOJ.

Discard old spring pin. Replace with a new one.

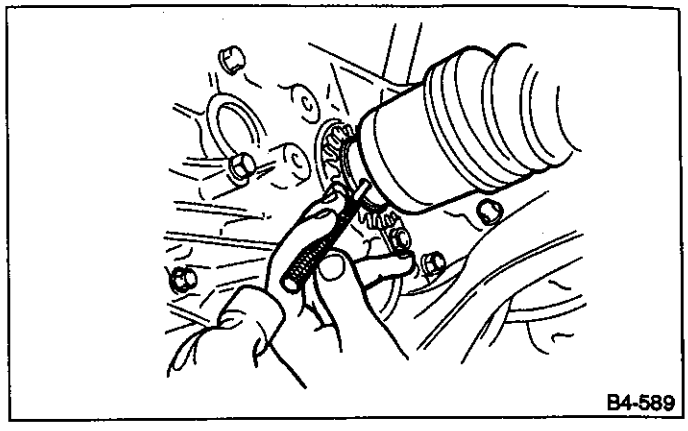

Fig. 18

7) Remove stabilizer clamp.

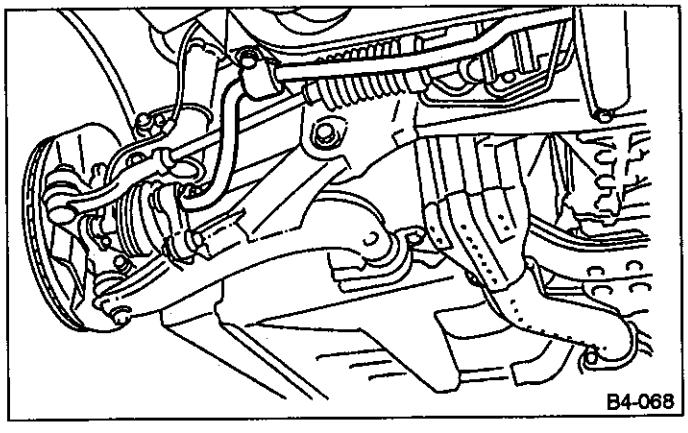

Fig. 19

8) Remove DOJ from transmission spindle.
9) Remove front drive shaft ASSY from hub. If it is hard to remove, use a PULLER (927070000).

a. Be careful not to damage oil seal lip when removing front drive shaft.
b. When replacing front drive shaft, also replace inner oil seal.

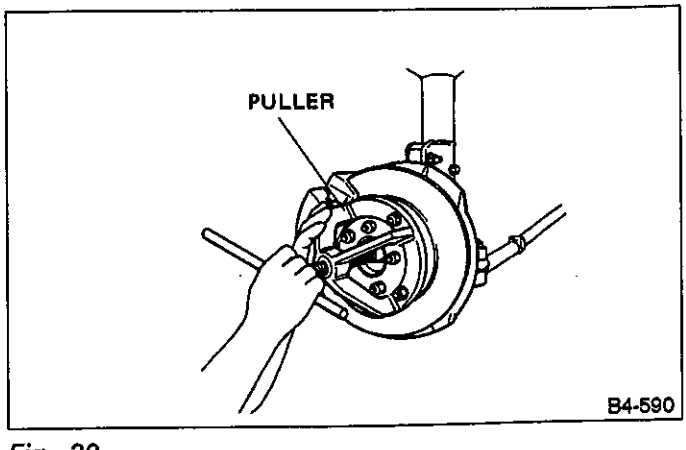

Fig. 20

10) Remove disc brake caliper from housing, and suspend it from strut using a wire.

11) Remove disc rotor from hub COMPL.
If disc rotor seizes up within hub, drive disc rotor out by installing an 8-mm bolt in screw hole on the rotor.

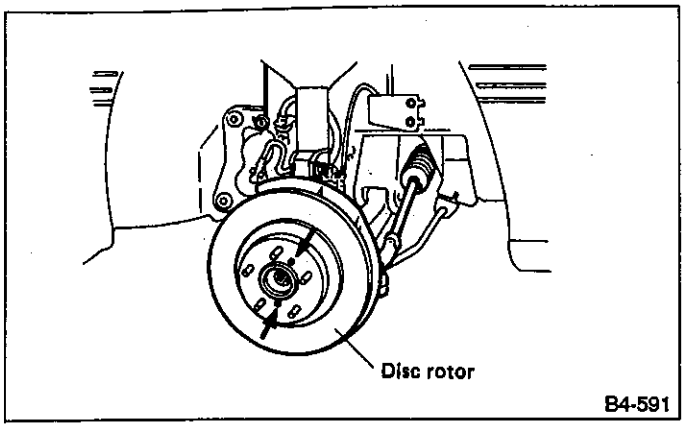

Fig. 21

12) Remove cotter pin and castle nut which secure tie-rod end to housing knuckle arm.

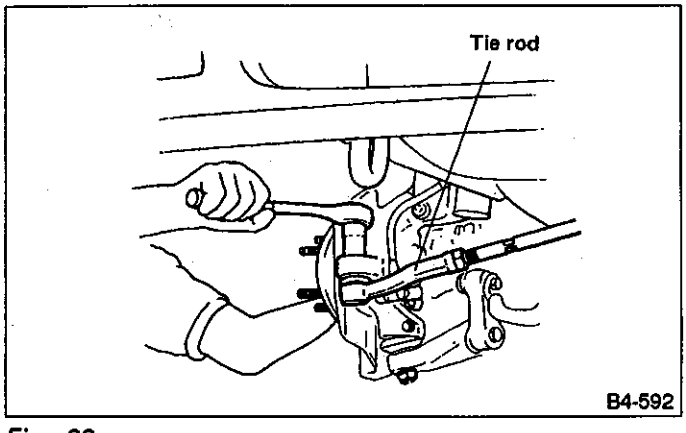

Fig. 22

13) Using a puller, remove tie rod ball joint from knuckle arm.

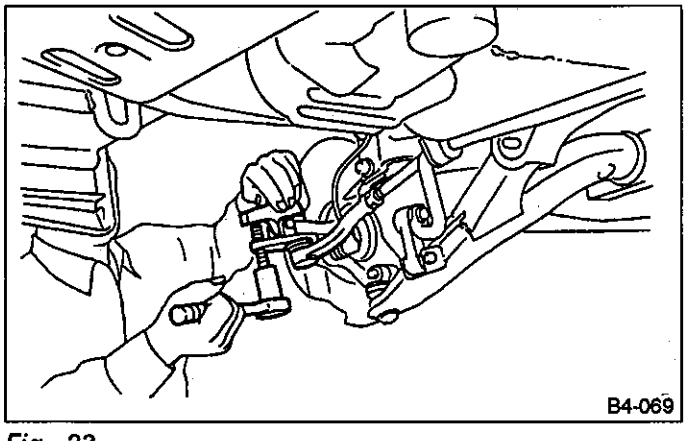

Fig. 23

14) Remove transverse link ball joint from housing.

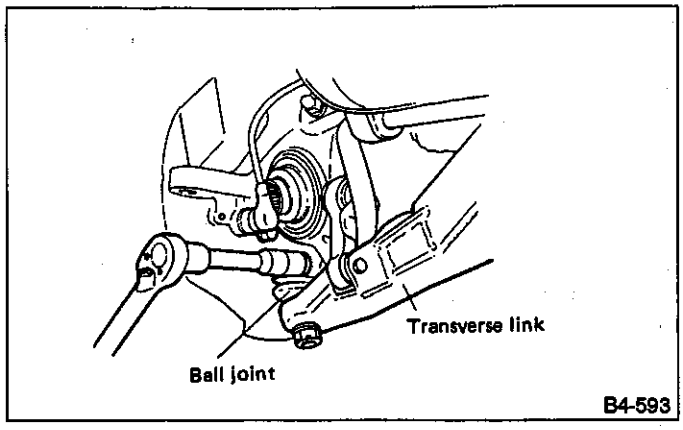

Fig. 24

15) After scribing an alignment mark on camber adjusting bolt head, remove bolts which connect housing and strut, and disconnect housing from strut.

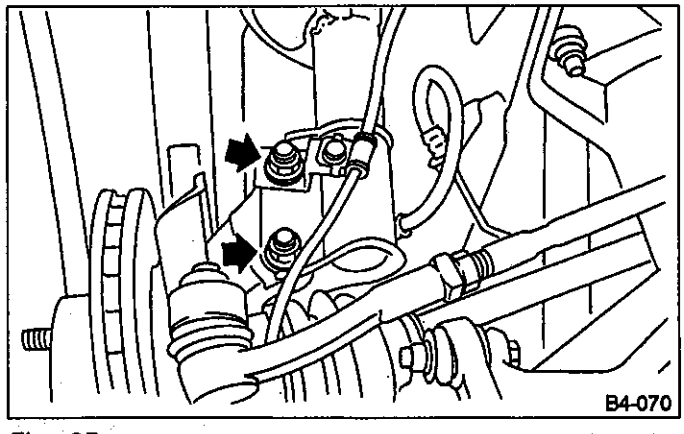

Fig. 25

On ABS equipped models, remove sensor assembly and harness in advance.

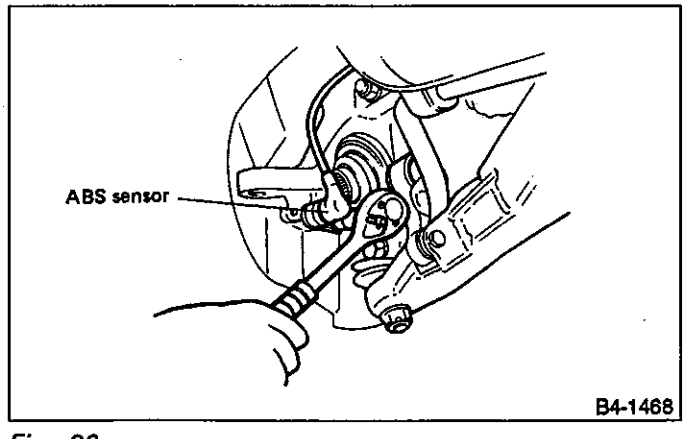

Fig. 26

Be sure to use soft jaws (such as aluminum plates) when placing the mating surfaces of housing and strut in a vise.

B: DISASSEMBLY

1) Using HUB STAND (927080000), support housing and hub ASSY securely.
2) Attach HUB REMOVER (927060000) to housing and drive hub COMPL out.

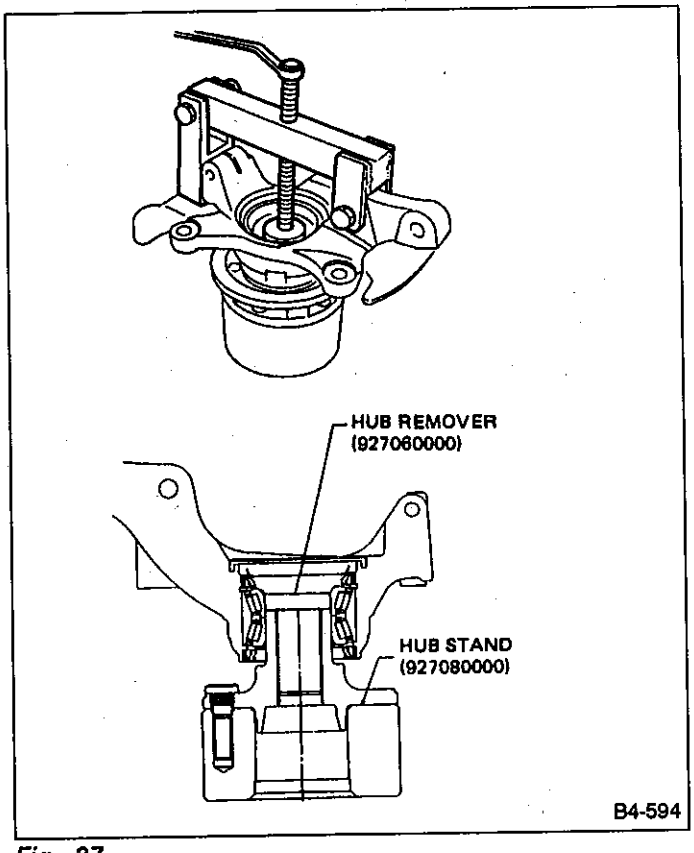

Fig. 27

If inner bearing race remains in the hub, remove it with a suitable tool (commercially available).

a. Be careful not to scratch polished area of hub.
b. Be sure to install inner race on the side of outer race from which it was removed.

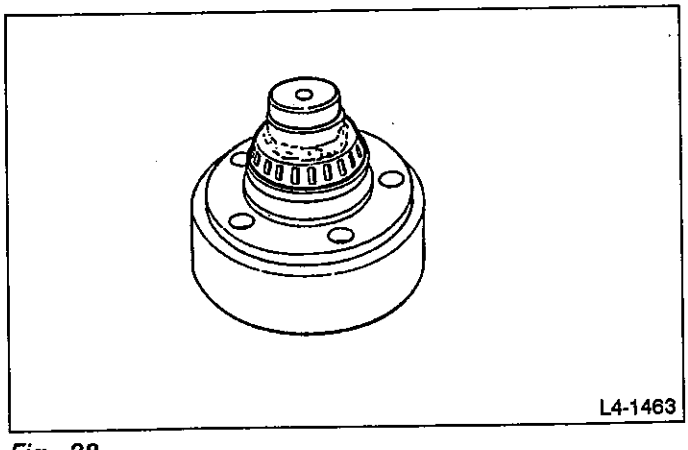

Fig. 28

3) Remove disc cover from housing.

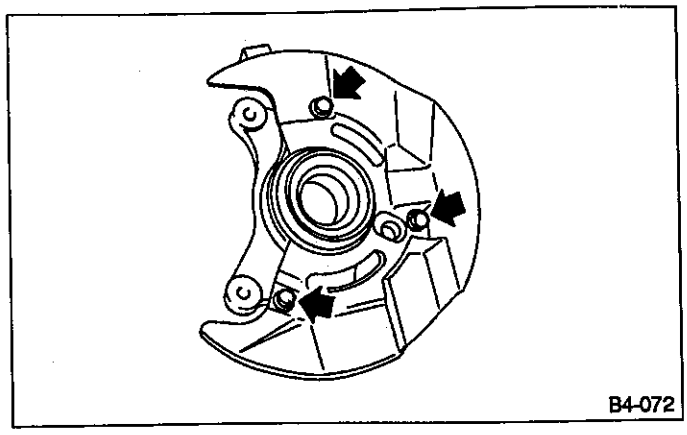

Fig. 29

4) Using a standard screwdriver, remove outer and inner oil seals.

Do not use old oil seals.

5) Using pliers, remove snap ring.

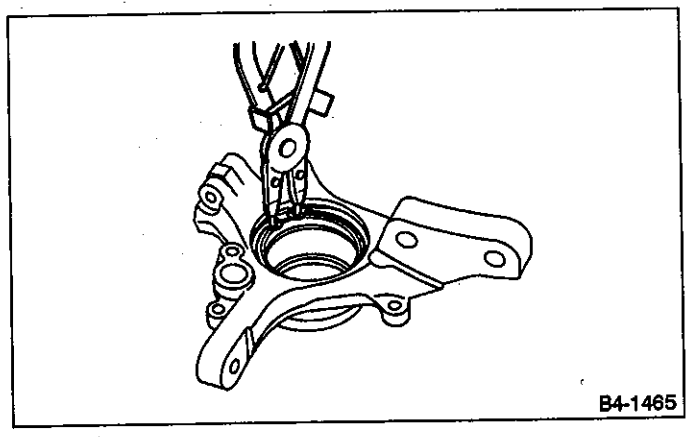

Fig. 30

6) Using HOUSING STAND (927400000), support housing securely.
7) Using BEARING REMOVER (927100000), press inner race to drive out outer bearing.

a. Do not remove outer race unless it is faulty.
b. Discard outer race after removal.
c. Do not replace inner or outer race separately; always replace as a unit.

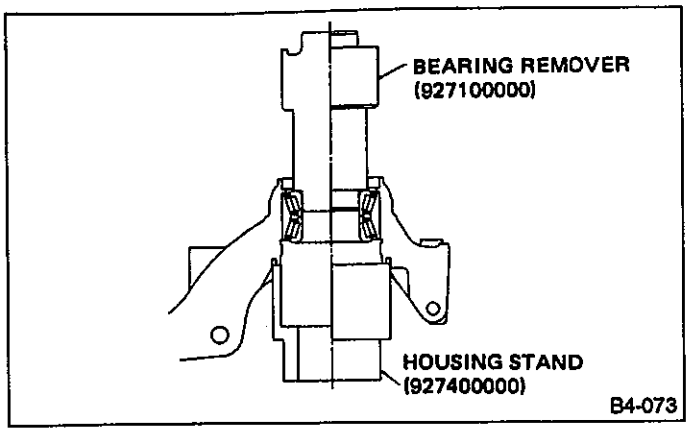

Fig. 31

8) Loosen bolts which secure tone wheel to hub. Remove tone wheel (only vehicle equipped with ABS).
9) Using HUB STAND (927080000) and a hydraulic press, drive hub bolts out.

Be careful not to hammer hub bolts. This may deform hub.

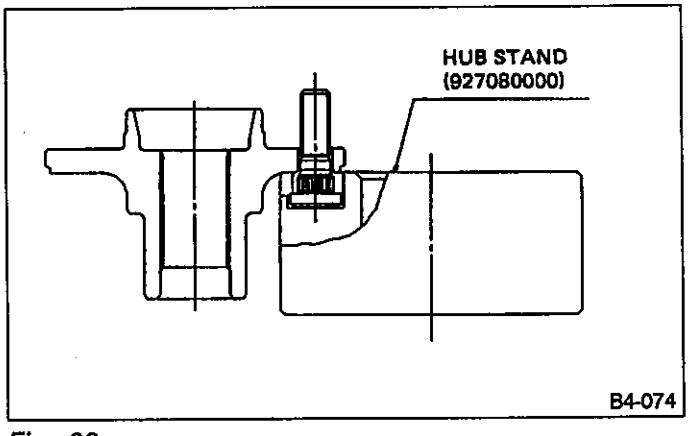

Fig. 32

C: INSPECTION

Check the removed parts for wear and damage. If defective, replace with a new one.

a. If bearing is faulty, replace it as the bearing set.
b. Be sure to replace oil seal at every overhaul.

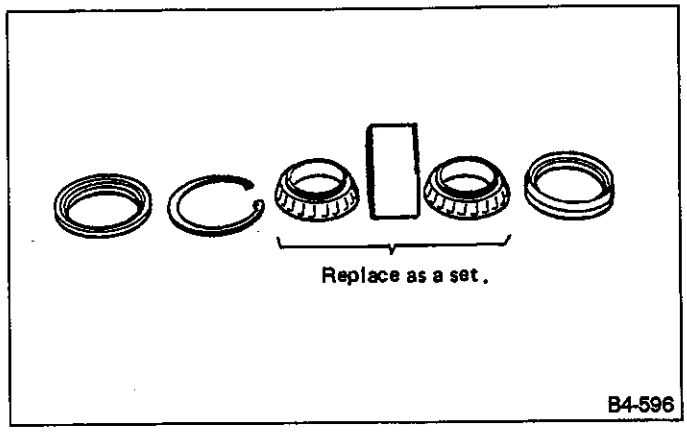

Fig. 33

D: ASSEMBLY

1) Attach hub COMPL to HUB STAND (927080000) securely.
2) Using a hydraulic press, press new hub bolts into place.

a. Use 12 mm (0.47 in) dia. holes in HUB STAND to prevent bolts from tilting.
b. Be sure to press hub bolts until their seating surfaces contact the hub.

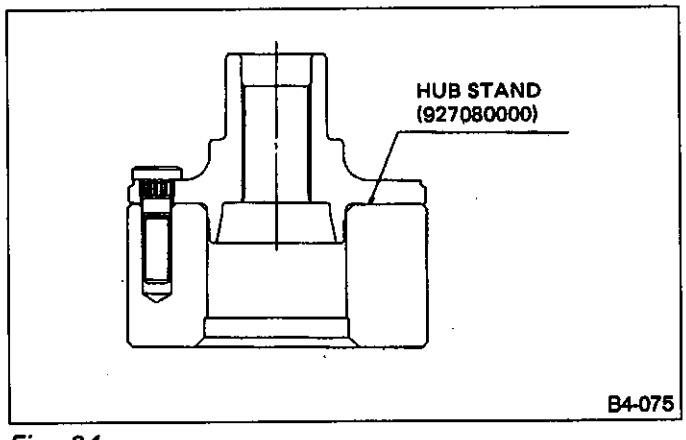

Fig. 34

3) Remove foreign particles (dust, rust, etc.) from mating surfaces of hub and tone wheel, and install tone wheel to hub COMPL (only vehicle equipped with ABS).

a. Ensure tone wheel closely contacts hub.
b. Be careful not to damage tone wheel teeth.

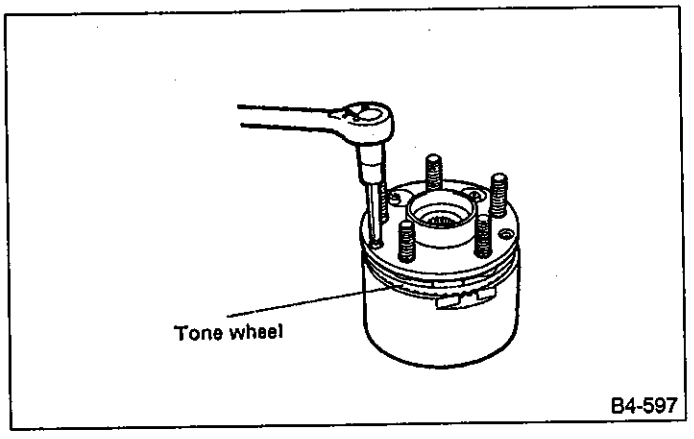

Fig. 35

4) Clean dust or foreign particles from inside the housing.
5) Using HOUSING STAND (927400000) and BEARING REMOVER (927100000), press a new bearing into place.

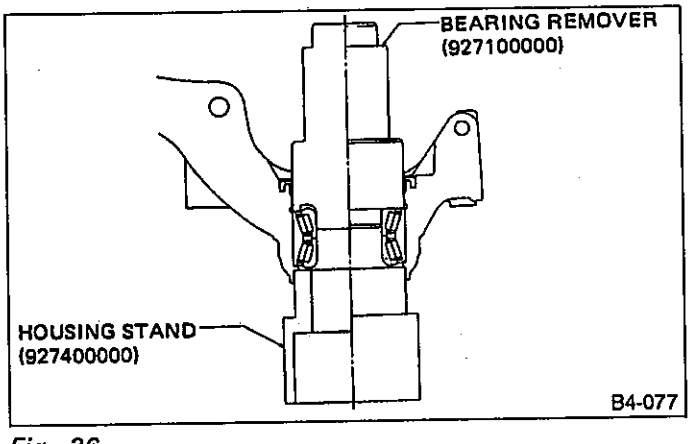

Fig. 36

a. Always press outer race when installing bearing.
b. Be careful not to remove plastic lock from inner race when installing bearing.
c. Charge bearing with new grease when outer race is not removed.

6) Install snap ring in its groove.

Make sure to install it firmly to groove.

7) Using OIL SEAL INSTALLER (927410000), press outer oil seal until it contacts the bottom of housing.

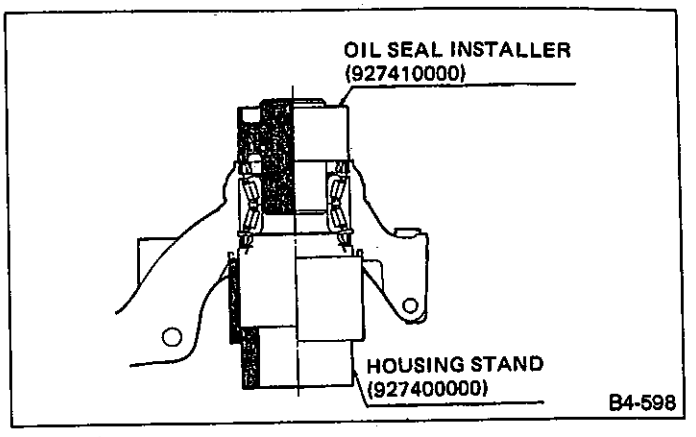

Fig. 37

8) Using OIL SEAL INSTALLER (927410000), press inner oil seal until it contacts circlip.

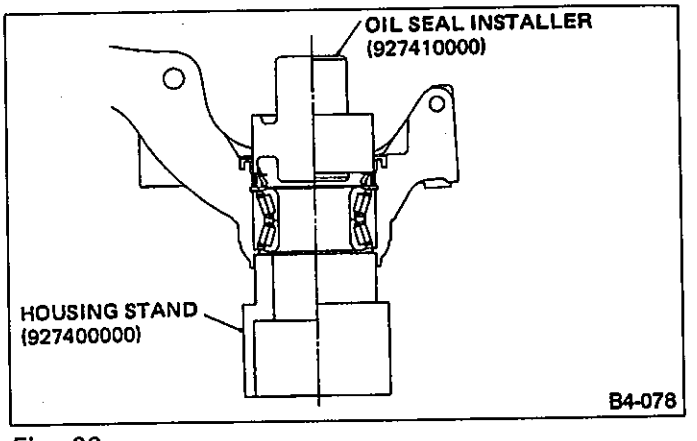

Fig. 38

9) Invert HOUSING STAND and housing.
10) Apply sufficient grease to oil seal lip.

Specified grease:
SHELL 6459N

a. If specified grease is not available, remove bearing grease and apply Auto Rex A instead.
b. Do not mix different types of grease.

11) Install disc cover to housing the three bolts.

Tightening torque:
10 — 18 N•m (1.0 — 1.8 kg-m, 7 — 13 ft-lb)

12) Attach hub COMPL to HUB STAND (927080000) securely.
13) Clean dust or foreign particles from the polished surface of hub.
14) Using HUB INSTALLER (927120000), press bearing into hub by driving inner race.

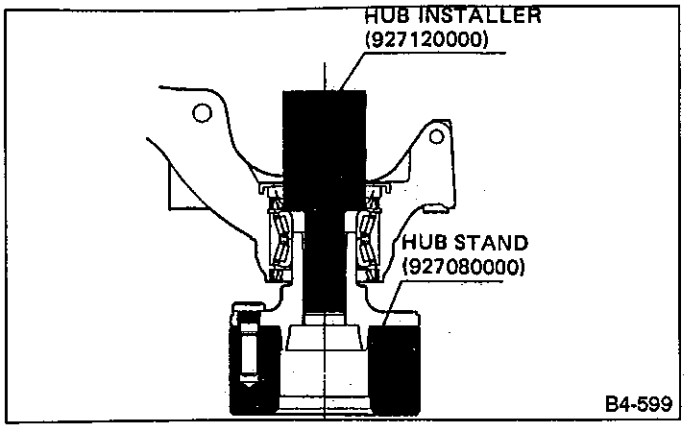

Fig. 39

E: INSTALLATION

1) Install transverse link ball joint to housing.

Tightening torque:
38 — 50 N•m (3.9 — 5.1 kg-m, 28 — 37 ft-lb)

2) While aligning alignment mark on camber adjusting bolt head, connect housing and strut.

Tightening torque:
132 — 162 N•m (13.5 — 16.5 kg-m, 98 — 119 ft-lb)

3) Install speed sensor and harness on housing (only vehicle equipped with ABS).
4) Install disc rotor on hub.
5) Install disc brake caliper on housing.

Tightening torque:
49 — 69 N•m (5 — 7 kg-m, 36 — 51 ft-lb)

6) Install front drive shaft. ⟨Ref. to 4-2 [W4E0].⟩
7) Connect transverse link to front crossmember, and temporarily tighten.

Use a new self-locking nut.

8) Connect stabilizer clamp.
9) Install tie-rod end ball joint on housing knuckle arm. ⟨Ref. to 4-3 [W3E0].⟩

Tightening torque:
25 — 29 N•m (2.5 — 3.0 kg-m, 18 — 22 ft-lb)

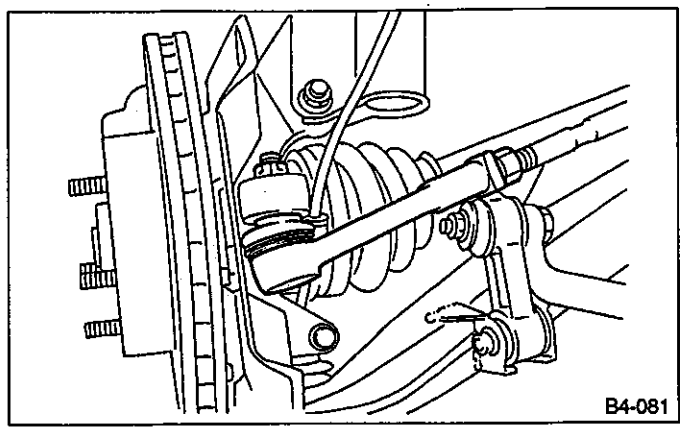

Fig. 40

10) While depressing brake pedal, tighten axle nut and lock it securely.

Tightening torque:
167 — 206 N•m (17 — 21 kg-m, 123 — 152 ft-lb)

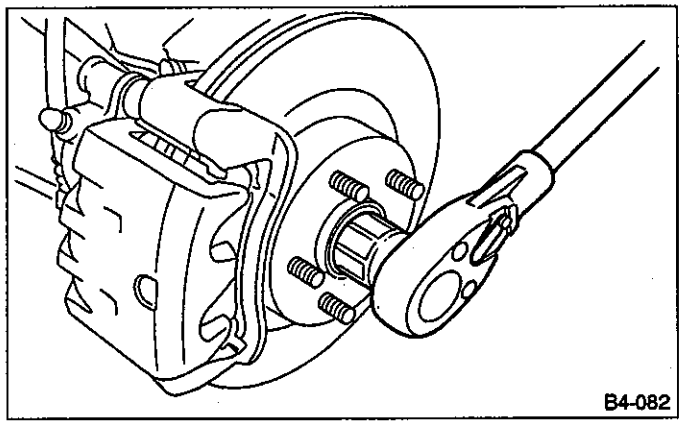

Fig. 41

a. Use a new axle nut.
b. Always tighten axle nut before installing wheel on vehicle. If wheel is installed and comes in contact with ground when axle nut is loose, wheel bearings may be damaged.

Be sure to tighten axle nut to specified torque. Do not overtighten it as this may damage wheel bearing.

11) After tightening axle nut, lock it securely.

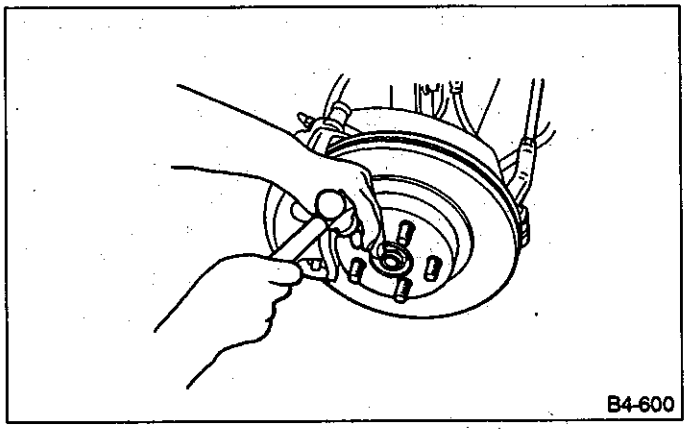

Fig. 42

12) Install wheel and tighten wheel nuts to specified torque.

Tightening torque:
78 — 98 N•m (8.0 — 10.0 kg-m, 58 — 72 ft-lb)

13) Securely tighten transverse link to front crossmember with tires on the ground.

2. Rear Axle (4WD)

A: REMOVAL

1) Disconnect ground cable from battery.
2) Jack up vehicle, and remove rear wheel cap and wheels.

Be sure to loosen and retighten axle nut after removing wheel from vehicle. Failure to follow this rule may damage wheel bearings.

3) Unlock axle nut.
4) Remove axle nut using a socket wrench.
5) Return parking brake lever and loosen adjuster.

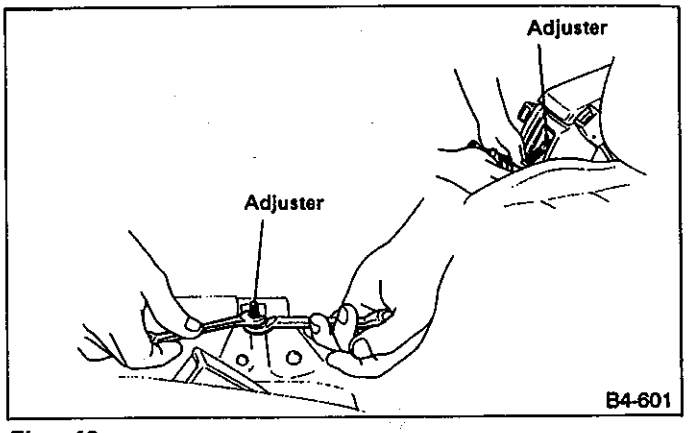

Fig. 43

Disc brake: Perform steps 6) and 7).
6) Remove disc brake ASSY from back plate, and suspend it from strut using a piece of wire.

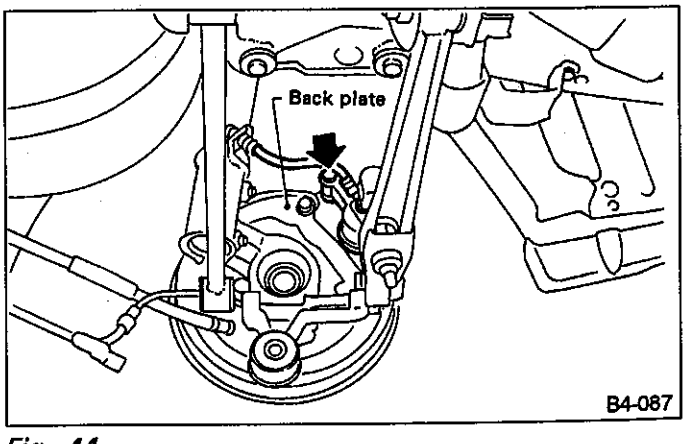

Fig. 44

7) Remove disc rotor from hub.

If disc rotor seizes up within hub, drive it out by installing an 8-mm bolt into bolt hole in disc rotor.

8) Disconnect end of parking brake cable.

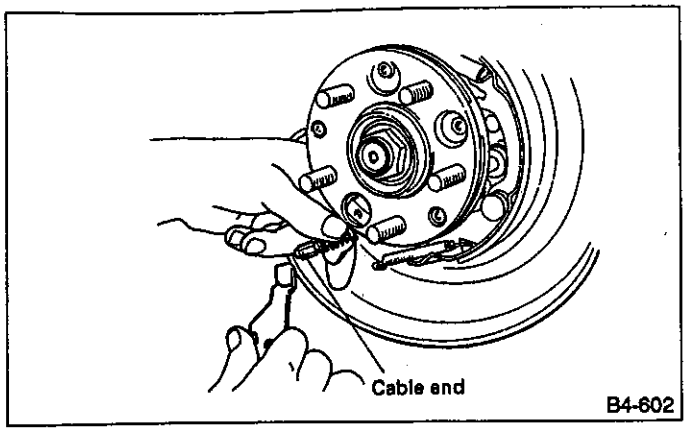

Fig. 45

Drum brake: Perform steps 8) and 9).

9) Remove brake drum from hub.

If brake drum seizes up within hub, drive it out by installing an 8-mm bolt into bolt hole in brake drum.

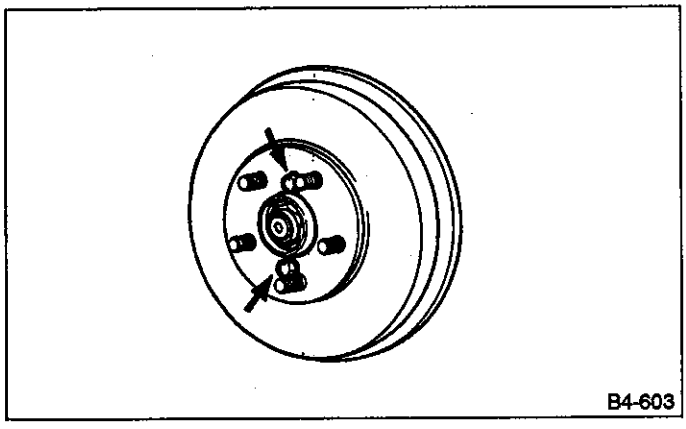

Fig. 46

10) Using a flare-nut wrench, disconnect brake pipe from wheel cylinder.

Cover open end of wheel cylinder to prevent entry of foreign particles.

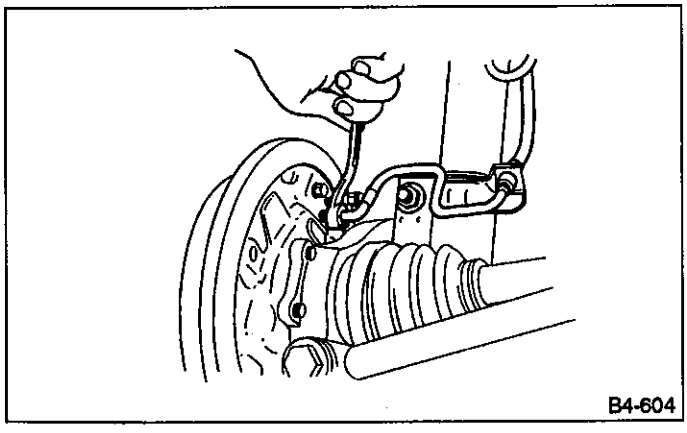

Fig. 47

11) Remove stabilizer clamp.

12) Remove bolts which secure lateral link ASSY to rear housing.

Discard old self-locking nut. Replace with a new one.

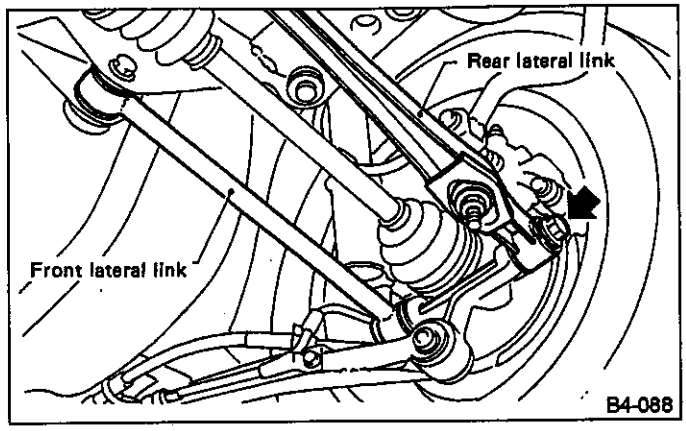

Fig. 48

13) Remove bolts which secure trailing link ASSY to rear housing.

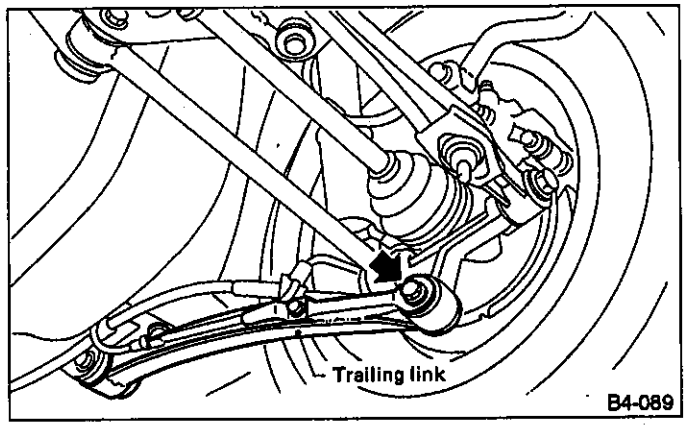

Fig. 49

Discard old self-locking nut. Replace with a new one.

14) Remove spring pin which secures rear differential spindle to DOJ.

Discard old spring pin. Replace with a new one.

15) Remove DOJ from rear differential spindle.

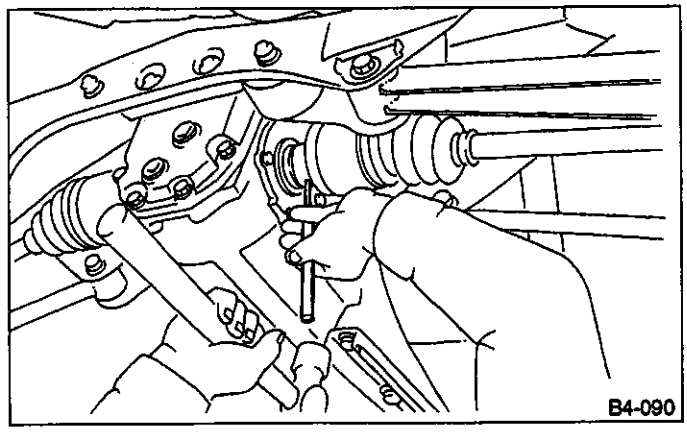

Fig. 50

16) Disengage BJ from housing splines, and remove rear drive shaft ASSY. If it is hard to remove, use a PULLER (927070000).

a. Be careful not to damage oil seal lip when removing rear drive shaft.
b. When rear drive shaft is to be replaced, also replace inner oil seal with a new one.

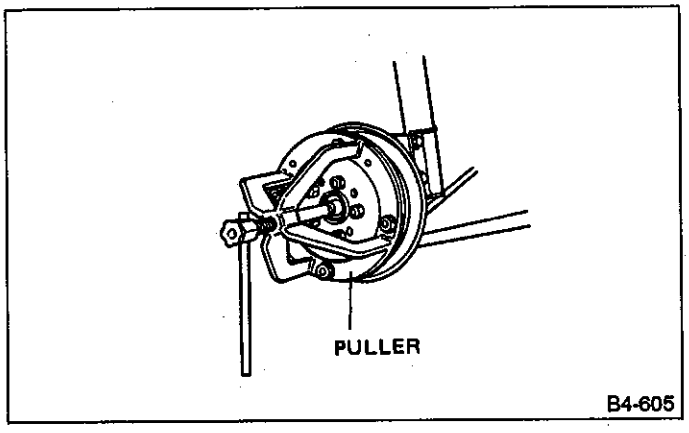

Fig. 51

17) Remove bolts which secure rear housing to strut, and separate the two.

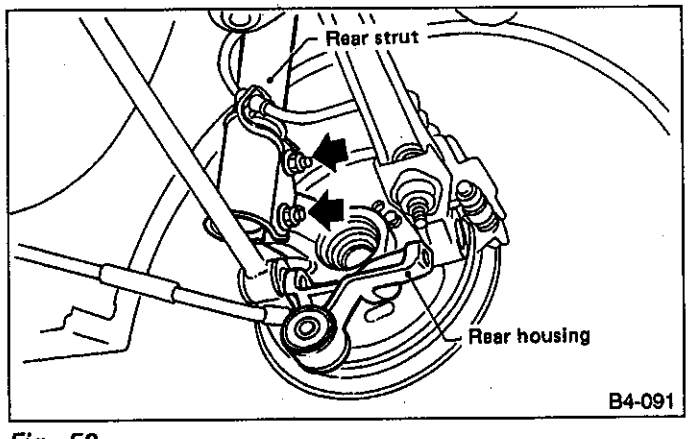

Fig. 52

18) Remove rear speed sensor from back plate (only vehicle equipped with ABS).

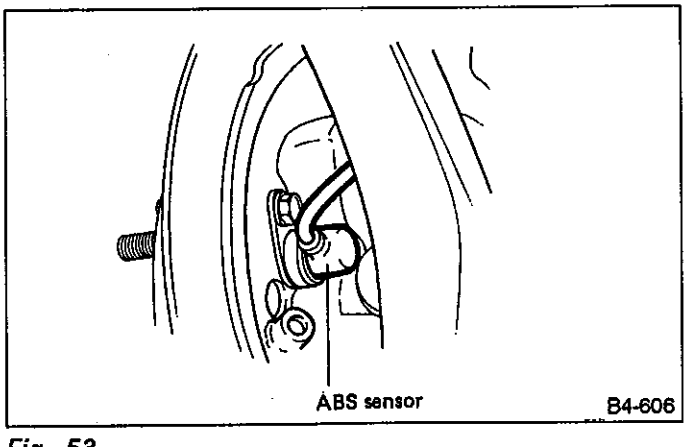

Fig. 53

B: DISASSEMBLY

1) Using HUB STAND (927080000) and HUB REMOVER (927420000), remove hub COMPL from rear housing.

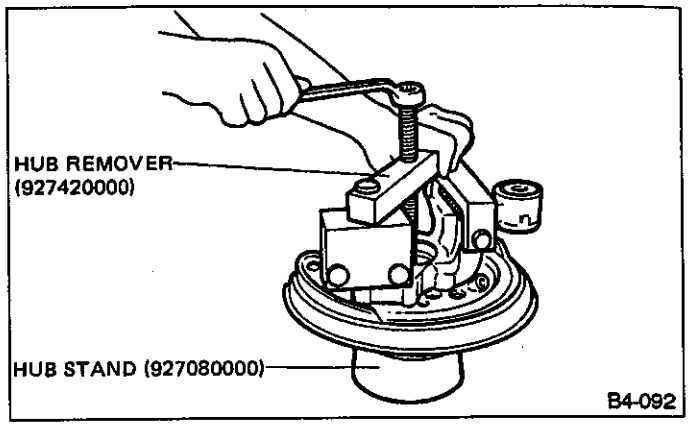

Fig. 54

2) Remove back plate from rear housing.
3) Using a standard screwdriver, remove outer and inner oil seals.

Use new oil seals.

4) Using plier, remove snap ring.

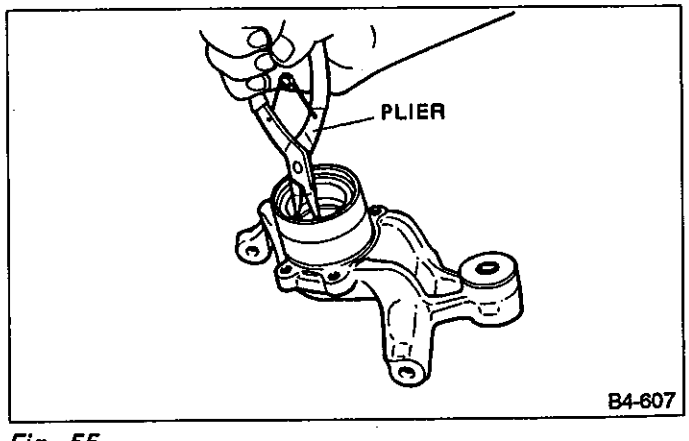

Fig. 55

5) Using HOUSING STAND (927430000) and BEARING REMOVER (927440000), remove bearing by pressing inner race.

a. Do not remove bearing unless damaged.
b. Do not re-use bearing after removal.

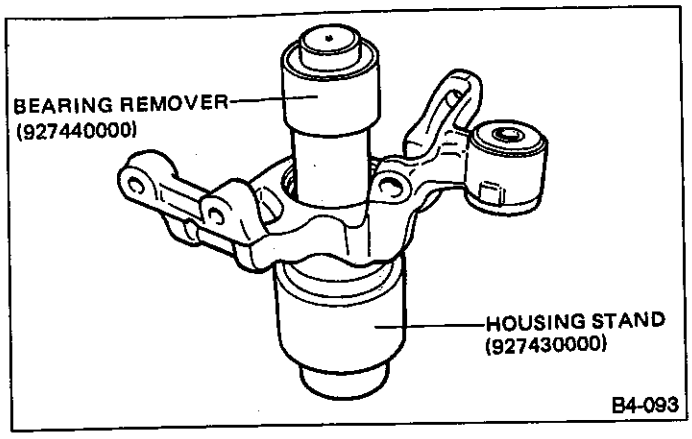

Fig. 56

6) Remove tone wheel bolts and remove tone wheel from hub (only vehicle equipped with ABS).
7) Using HUB STAND (927080000), press hub bolt out.

Be careful not to hammer hub bolts. This may deform hub.

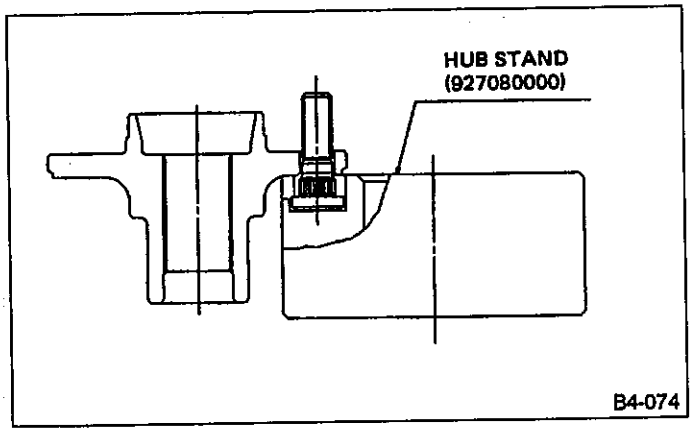

Fig. 57

C: INSPECTION

Check the removed parts for wear and damage. If defective, replace with a new one.

a. If a bearing is faulty, replace it as the bearing set.
b. Be sure to replace oil seal at every overhaul.

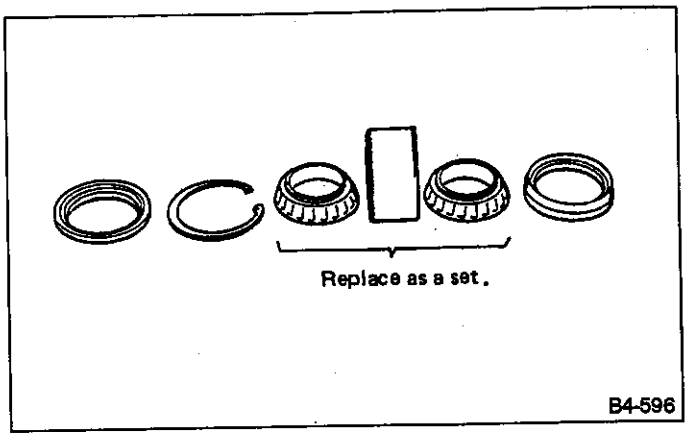

Fig. 58

D: ASSEMBLY

1) Using HUB STAND (927080000), press new hub bolt into place.

a. Ensure hub bolt closely contacts hub.
b. Use a 12 mm (0.47 in) hole in the HUB STAND (927080000) to prevent hub bolt from tilting during installation.

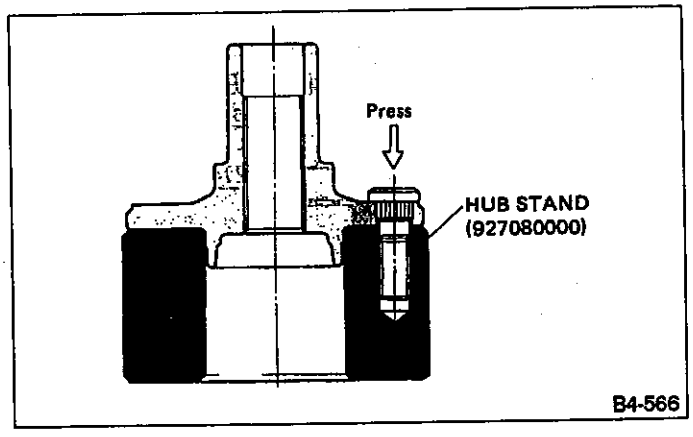

Fig. 59

2) Remove foreign particles (dust, rust, etc.) from mating surfaces of hub and tone wheel, and install tone wheel to hub (only vehicle equipped with ABS).

a. Ensure tone wheel closely contacts hub.
b. Be careful not to damage tone wheel teeth.

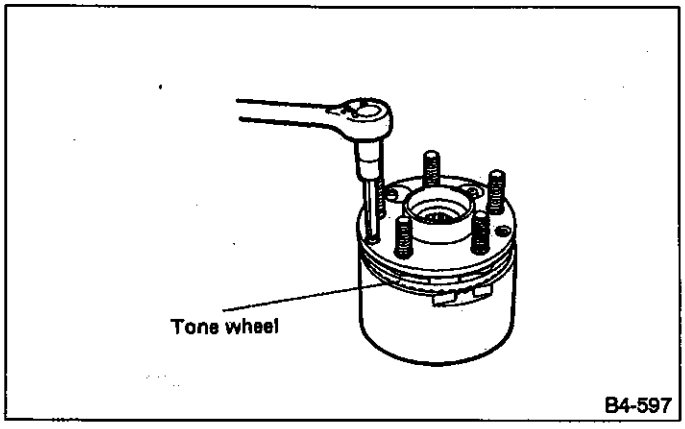

Fig. 60

3) Clean housing interior completely. Using HOUSING STAND (927430000) and BEARING REMOVER (927440000), press bearing into housing.

a. Always press outer race when installing bearing.
b. Be careful not to remove plastic lock from inner race when installing bearing.
c. Charge bearing with new grease when outer race is not removed.

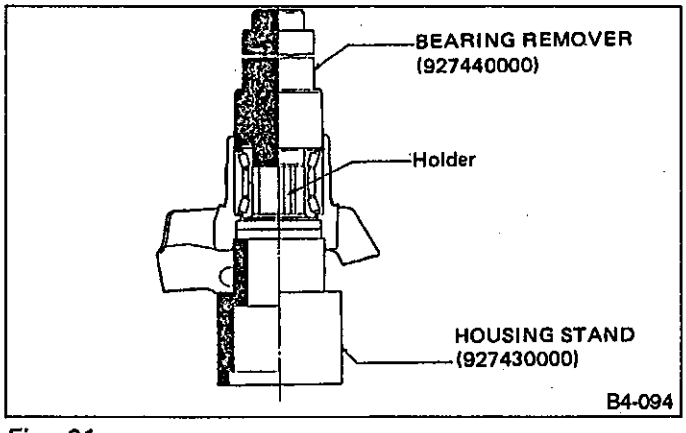

Fig. 61

4) Install snap ring.

Ensure snap ring fits in groove properly.

5) Using HOUSING STAND (927430000) and OIL SEAL INSTALLER (927460000), press outer oil seal until it comes in contact with snap ring.

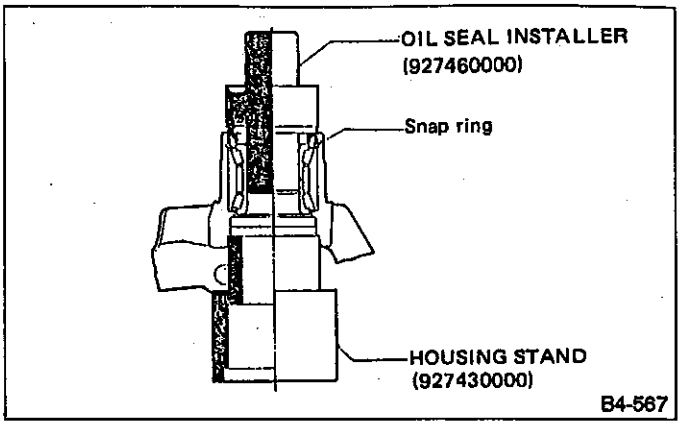

Fig. 62

6) Invert both HOUSING STAND (927430000) and housing.

7) Using HUB INSTALLER (927450000), press inner oil seal into housing until it touches bottom.

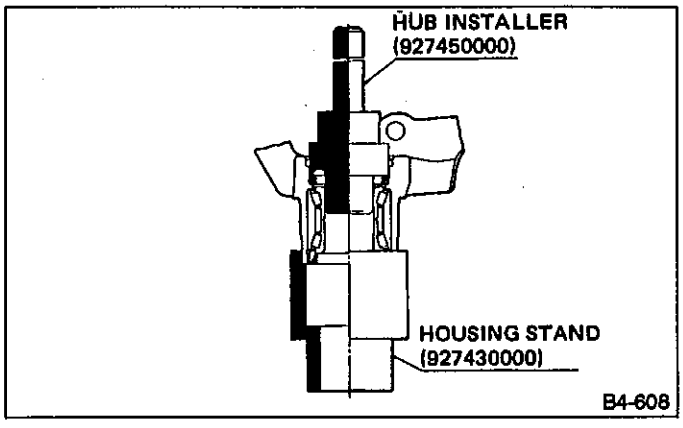

Fig. 63

8) Press sub seal into place.

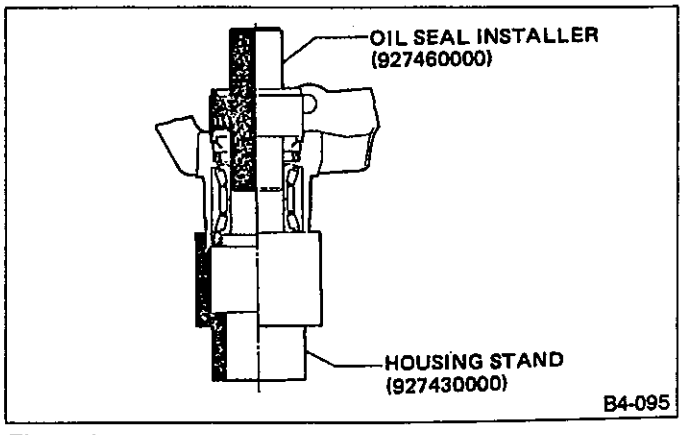

Fig. 64

9) Apply sufficient grease to oil seal lip.

Specified grease:
SHELL 6459N

a. If specified grease is not available, remove bearing grease and apply Auto Rex A instead.
b. Do not mix different types of grease.

10) Install back plate to rear housing.

Tightening torque:
46 — 58 N•m (4.7 — 5.9 kg-m, 34 — 43 ft-lb)

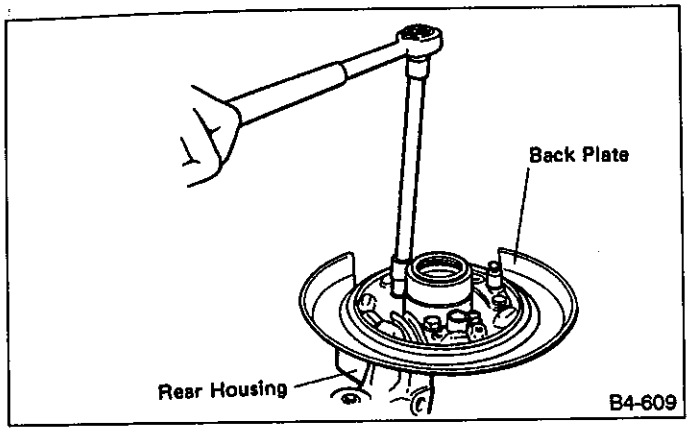

Fig. 65

11) Using HUB STAND (927080000) and HUB INSTALLER (927450000), press bearing into hub.

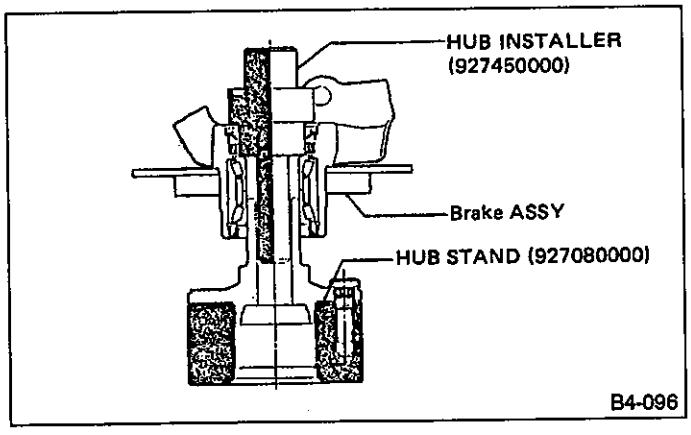

Fig. 66

E: INSTALLATION

1) Connect rear housing ASSY and strut ASSY.

Tightening torque:
132 — 162 N•m (13.5 — 16.5 kg-m, 98 — 119 ft-lb)

2) Install rear speed sensor to back plate (only vehicle equipped with ABS).

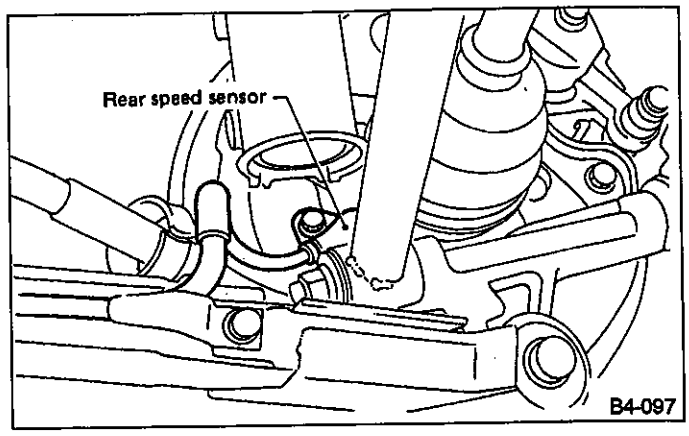

Fig. 67

3) Fit BJ (bell joint) to rear housing splines.

Be careful not to damage inner oil seal lip.

4) Install rear drive shaft. 〈Ref. to 4-2 [W4E0].〉

5) Connect rear housing ASSY to trailing link ASSY.

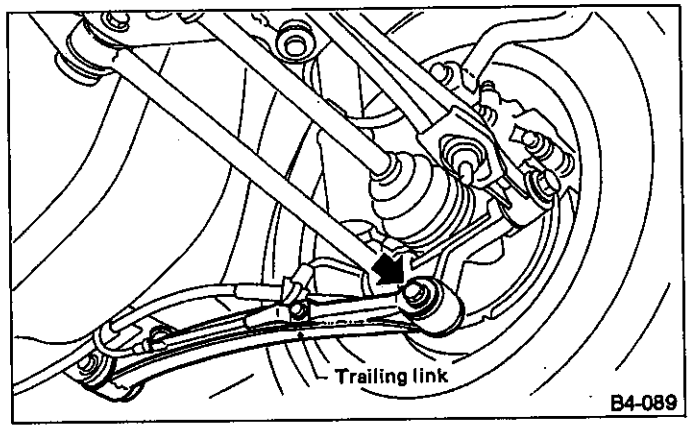

Fig. 68

Use a new self-locking nut.

Tightening torque:
98 — 127 N•m (10 — 13 kg-m, 72 — 94 ft-lb)

6) Connect rear housing ASSY to lateral link ASSY.

Use a new self-locking nut.

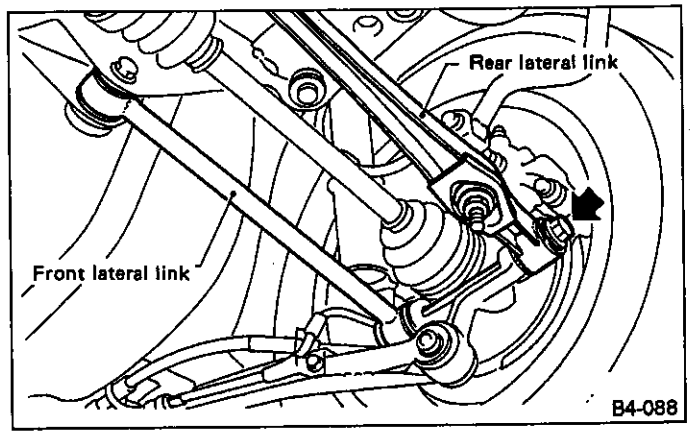

Fig. 69

Tightening torque:
118 — 157 N•m (12.0 — 16.0 kg-m, 87 — 116 ft-lb)

7) Install stabilizer clamp.
Disc brake: Perform steps 8) and 9).
8) Connect parking brake cable to disc brake ASSY.
9) Install disc rotor on rear housing ASSY.
10) Install disc brake ASSY on back plate.

Tightening torque:
46 — 58 N•m (4.7 — 5.9 kg-m, 34 — 43 ft-lb)

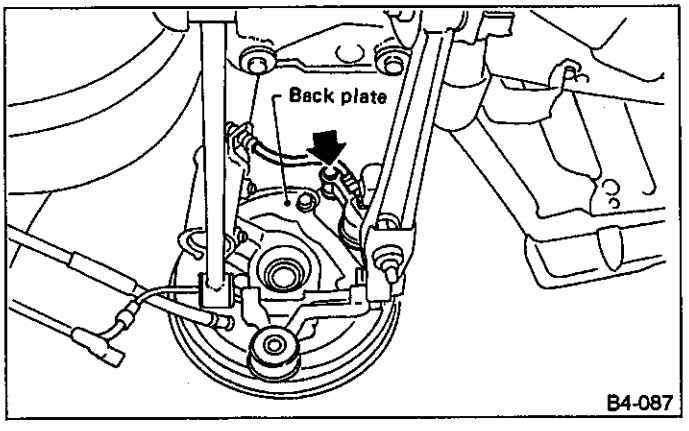

Fig. 70

Drum brake: Perform steps 10) through 13).
11) Clean brake pipe connection. Using a flare-nut wrench, connect brake pipe to wheel cylinder.
12) Connect parking brake cable to lever.
13) Install brake drum on rear housing ASSY.
14) Bleed air from brake system. (Ref. to 4-4 [W15B0].)
15) Adjust parking brake lever stroke by turning adjuster.
16) Move brake lever back to apply brakes. While depressing brake pedal, tighten axle nut using a socket wrench. Lock axle nut after tightening.

Tightening torque:
167 — 206 N•m (17 — 21 kg-m, 123 — 152 ft-lb)

a. Use a new axle nut.
b. Always tighten axle nut before installing wheel on vehicle. If wheel is installed and comes in contact with ground when axle nut is loose, wheel bearings may be damaged.
c. Be sure to tighten axle nut to specified torque. Do not overtighten it as this may damage wheel bearing.

17) Install wheel and tighten wheel nuts to specified torque.

Tightening torque:
78 — 98 N•m (8.0 — 10.0 kg-m, 58 — 72 ft-lb)

3. Rear Axle (FWD)

A: REMOVAL

1) Disconnect ground cable from battery.
2) Jack up vehicle, and remove rear wheel cap and wheels.

Be sure to loosen and retighten axle nut after removing wheel from vehicle. Failure to follow this rule may damage wheel bearings.

3) Pry hub cap off with a screwdriver placed between it and hub.
4) Unlock axle nut.
5) Remove axle nut using a socket wrench. Remove washer.

a. Do not re-use old axle nut. Replace with a new one.
b. Temporarily tighten axle nut to hold hub in place.

6) Return parking brake lever and loosen adjuster.

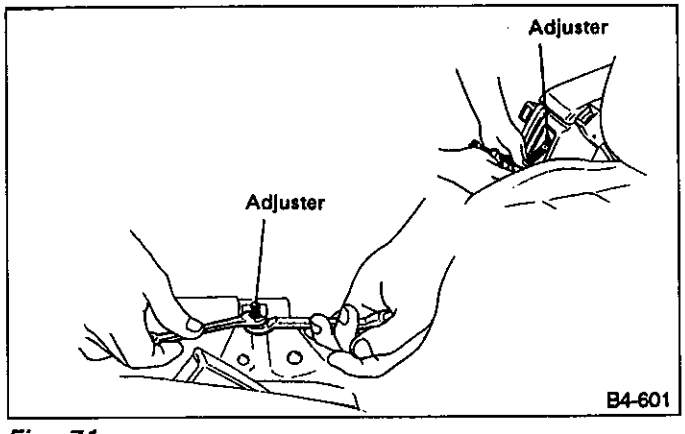

Fig. 71

Disc brake: Perform steps 7) through 9).
7) Remove disc brake ASSY from back plate. Suspend disc brake ASSY from strut using a wire.

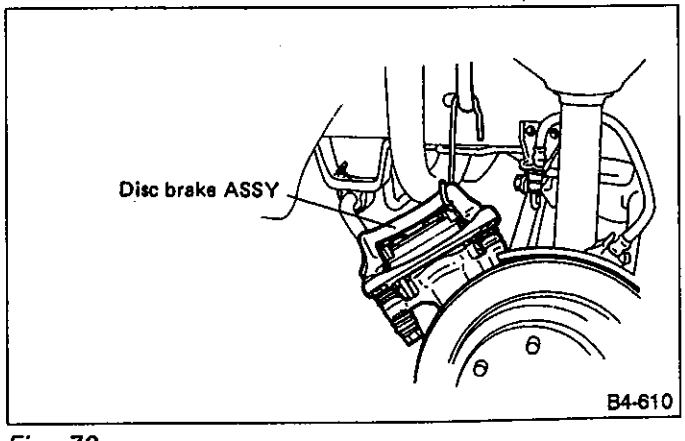

Fig. 72

8) Remove disc rotor from hub.
If disc rotor seizes up within hub, drive it out by installing an 8-mm bolt in bolt hole on disc rotor.

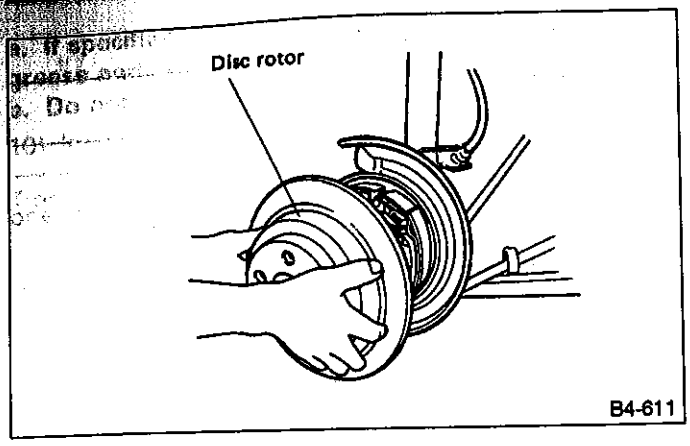

Fig. 73

9) Disconnect end of parking brake cable.

Drum brake: Perform steps 10) through 12).

10) Remove brake drum from hub.

If brake drum seizes up within hub, drive it out by installing an 8-mm bolt in bolt hole on brake drum.

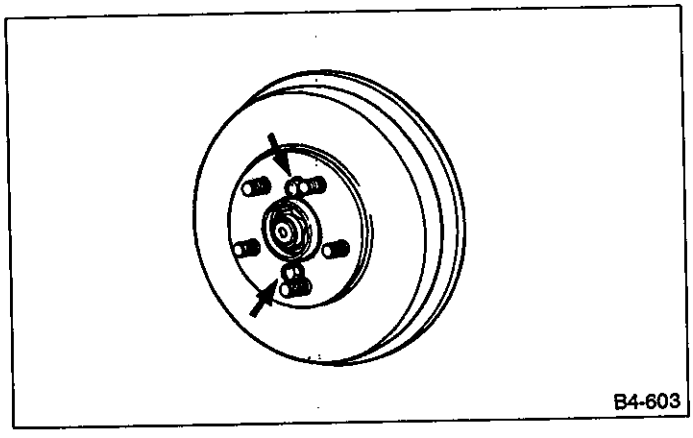

Fig. 74

11) Disconnect end of parking brake cable.

12) Using a flare-nut wrench, disconnect brake pipe from wheel cylinder.

Cover brake pipe connection to prevent entry of foreign particles.

13) Remove bolts which secure lateral link ASSY to rear spindle.

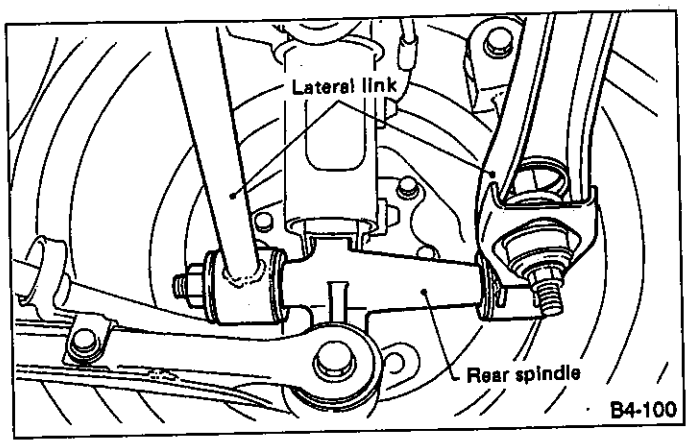

Fig. 75

Discard old self-locking nut. Replace with a new one.

14) Remove bolts which secure trailing link ASSY to rear spindle.

Discard old self-locking nut. Replace with a new one.

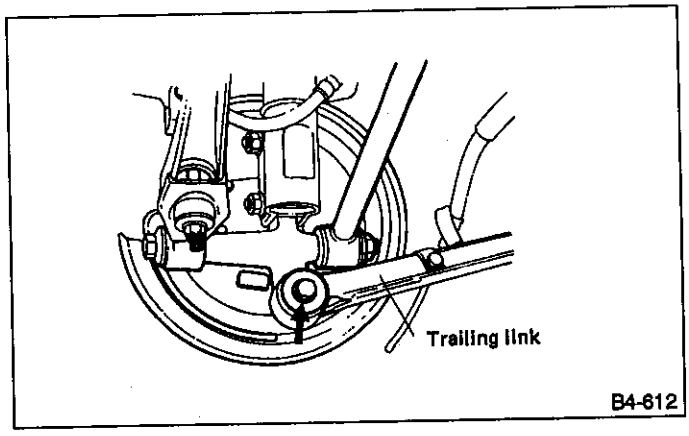

Fig. 76

15) Remove bolts which secure strut ASSY to rear spindle.

Remove rear spindle, back plate and hub as a unit.

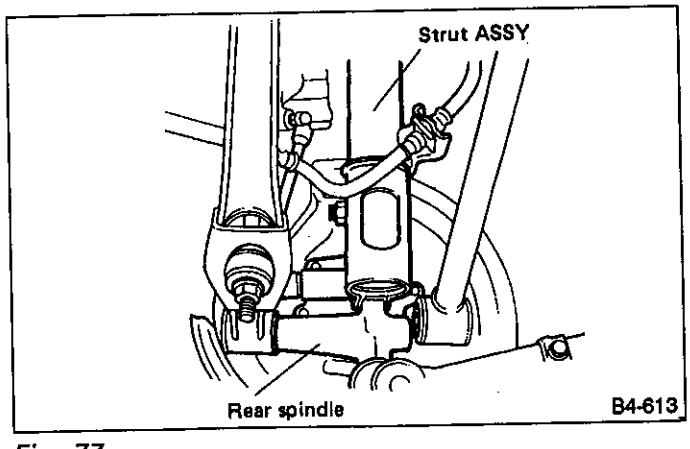

Fig. 77

B: DISASSEMBLY

1) Remove hub unit from rear spindle.

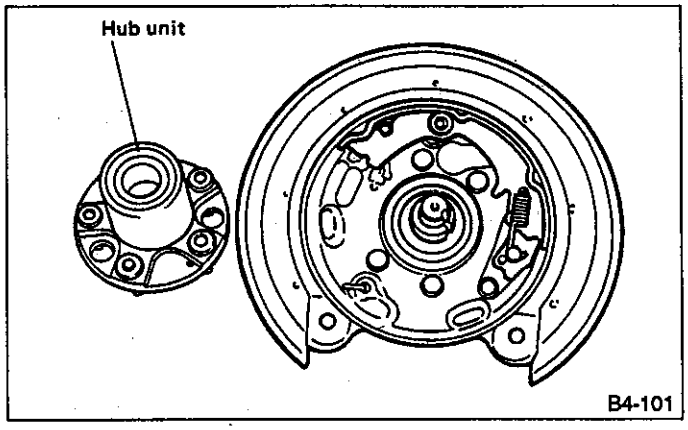

Fig. 78

2) Remove back plate from rear spindle.

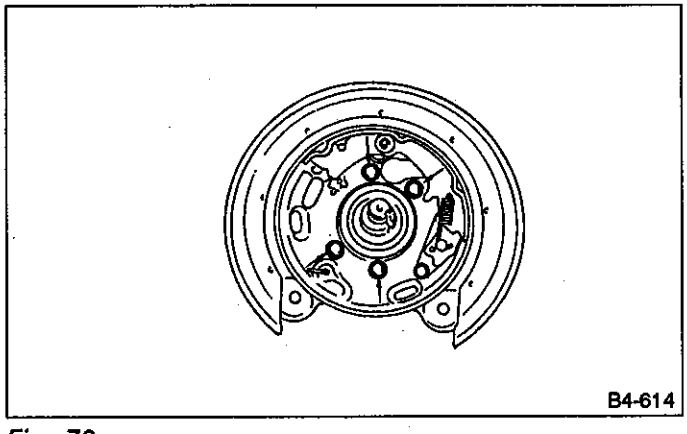

Fig. 79

3) Using HUB STAND (927080000), press hub bolt out.

Do not hammer hub bolt since this may deform hub.

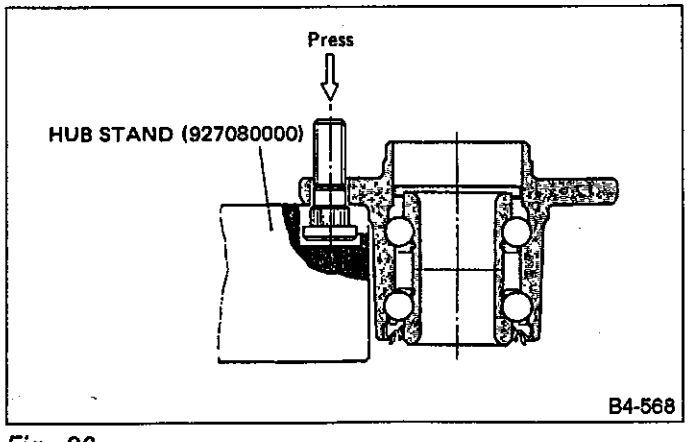

Fig. 80

C: INSPECTION

Clean the removed parts and check them for wear, damage and corrosion. If faulty, replace.

Hub unit cannot be disassembled. If faulty, replace it as a unit.

D: ASSEMBLY

1) Press new hub bolt into place using a press.

a. Use a 12 mm (0.47 in) hole in the HUB STAND (927080000) to prevent hub bolt from tilting during installation.

b. Ensure hub bolt closely contacts hub.

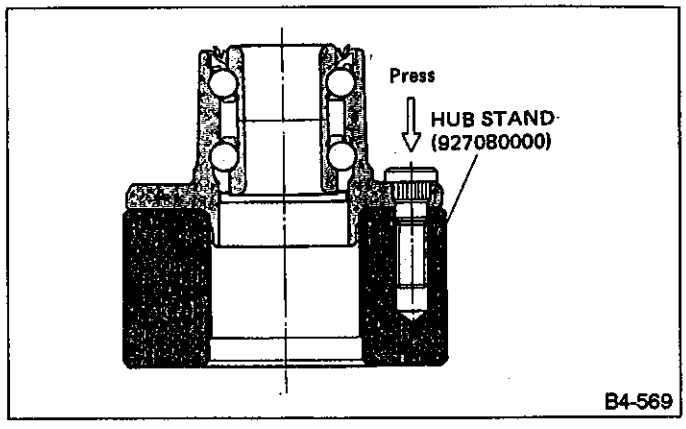

Fig. 81

2) Completely clean dust or dirt from the mating/ polished surface of rear spindle back plate.

3) Install back plate to rear spindle.

Tightening torque:
46 — 58 N•m (4.7 — 5.9 kg-m, 34 — 43 ft-lb)

4) Charge oil seal located on the rear of hub with grease.

Specified grease:
SHELL 6459N

5) Install hub on rear spindle. Temporarily tighten axle nut and washer to hold hub in place.

Discard old axle nut. Replace with a new one.

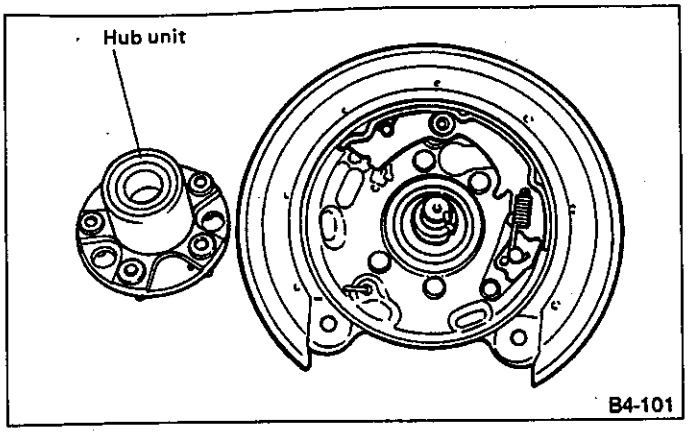

Fig. 82

E: INSTALLATION

1) Connect rear spindle ASSY to strut ASSY.

Tightening torque:
132 — 162 N•m (13.5 — 16.5 kg-m, 98 — 119 ft-lb)

Use a new self-locking nut.

2) Connect rear spindle ASSY to trailing link ASSY.

Tightening torque:
98 — 127 N•m (10.0 — 13.0 kg-m, 72 — 94 ft-lb)

Use a new self-locking nut.

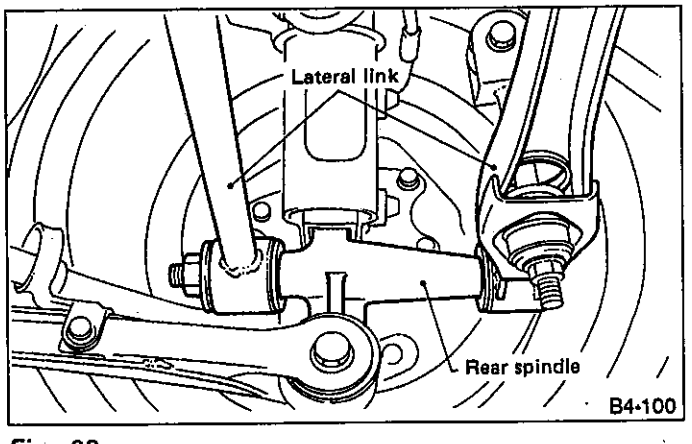

Fig. 83

3) Connect rear spindle ASSY to lateral link ASSY.

Tightening torque:
118 — 157 N•m (12.0 — 16.0 kg-m, 87 — 116 ft-lb)

Use new self-locking nut.

Disc brake: Perform steps 4) through 6).

4) Connect end of parking brake cable.
5) Install disc rotor to hub unit.
6) Install disc brake ASSY to back plate.

Tightening torque:
46 — 58 N•m (4.7 — 5.9 kg-m, 34 — 43 ft-lb)

Drum brake: Perform steps 7) through 10).

7) Completely clean brake pipe connection. Using a flare-nut wrench, connect brake pipe to wheel cylinder.
8) Connect parking brake cable to lever.
9) Install brake drum on hub unit.
10) Bleed air from brake system. (Ref. to 4-4 [W15B0].)
11) Tighten axle nut using a socket wrench, and lock securely.

Tightening torque:
167 — 206 N•m (17 — 21 kg-m, 123 — 152 ft-lb)

a. Use a new axle nut.
b. Always tighten axle nut before installing wheel on vehicle. If wheel is installed and comes in contact with ground when axle nut is loose, wheel bearings may be damaged.
c. Be sure to tighten axle nut to specified torque. Do not overtighten it as this may damage wheel bearing.

12) Install O-ring to hub cap flange, and install hub cap by lightly tapping it with a plastic-faced hammer.
13) Install wheel and tighten wheel nuts to specified torque.

Tightening torque (Wheel nut):
78 — 98 N•m (8.0 — 10.0 kg-m, 58 — 72 ft-lb)

4. Front and Rear Drive Shafts

A: REMOVAL

1. FRONT DRIVE SHAFT

1) Disconnect ground cable from battery.
2) Jack up vehicle, support it with safety stands (rigid rocks), and remove front wheel cap and wheels.
3) Unlock axle nut.
4) Remove axle nut using a socket wrench.

Be sure to loosen and retighten axle nut after removing wheel from vehicle. Failure to follow this rule may damage wheel bearings.

5) Remove transverse link from front crossmember.

Discard old axle nut. Replace with a new one.

6) Remove spring pin which secures transmission spindle to DOJ.

Use a new spring pin.

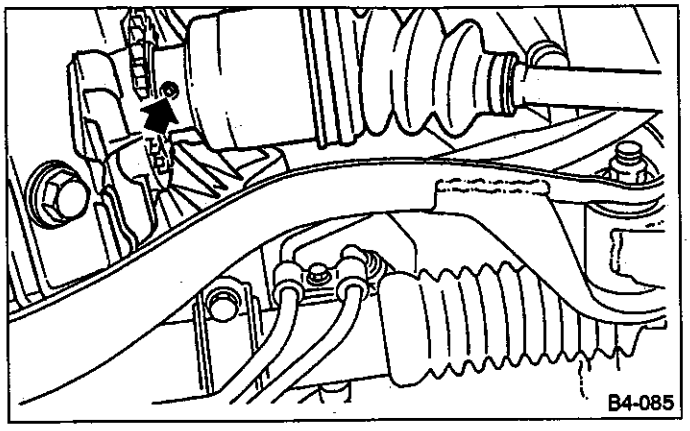

Fig. 84

7) Remove stabilizer clamp.
8) Remove front drive shaft ASSY. If it is hard to remove, use a PULLER (927070000).

a. Be careful not to damage oil seal lip when removing front drive shaft.
b. When front drive shaft is to be replaced, also replace inner oil seal.

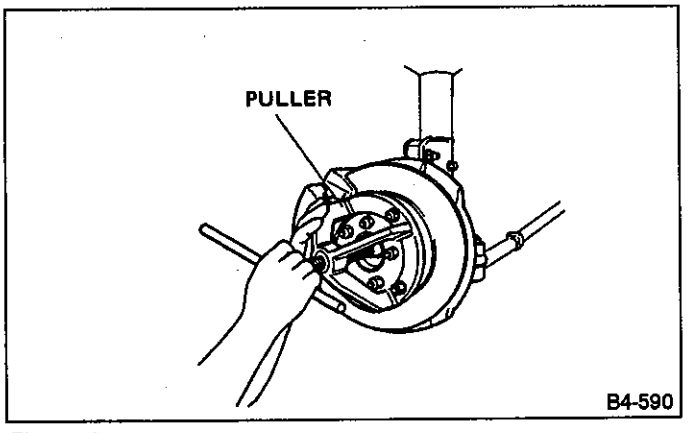

Fig. 85

2. REAR DRIVE SHAFT

1) Disconnect ground cable from battery.
2) Jack up vehicle, and remove rear wheel cap and wheels.

Be sure to loosen and retighten axle nut after removing wheel from vehicle. Failure to follow this rule may damage wheel bearings.

3) Unlock axle nut.
4) Remove axle nut using a socket wrench.
5) Remove stabilizer clamp.
6) Remove bolts which secure lateral link ASSY to rear housing.

Discard old self-locking nut. Replace with a new one.

7) Remove bolts which secure trailing link ASSY to rear housing.

Discard old self-locking nut. Replace with a new one.

8) Remove spring pin which secures rear differential spindle to DOJ.

Discard old spring pin. Replace with a new one.

9) Remove DOJ from rear differential spindle.

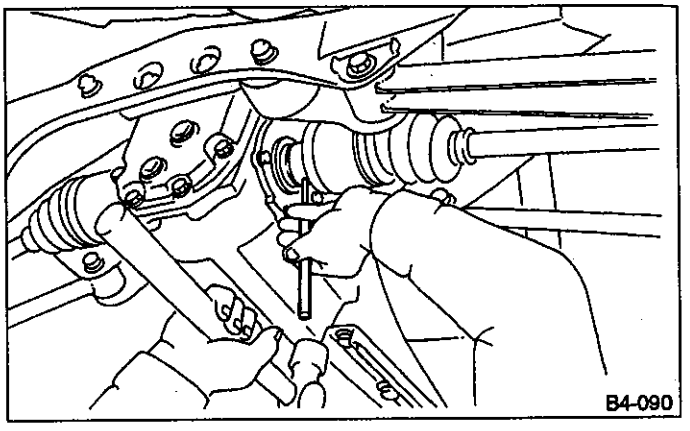

Fig. 86

10) Disengage BJ from housing splines, and remove rear drive shaft ASSY. If it is hard to remove, use a PULLER (927070000).

a. Be careful not to damage oil seal lip when removing rear drive shaft.
b. When rear drive shaft is to be replaced, also replace inner oil seal with a new one.

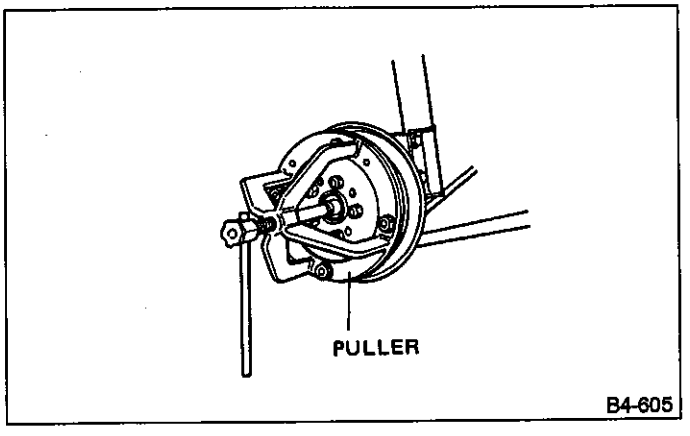

Fig. 87

B: DISASSEMBLY

1) Straighten bent claw of larger end of DOJ boot.
2) Loosen band by means of screwdriver or pliers with care of not damaging boot.

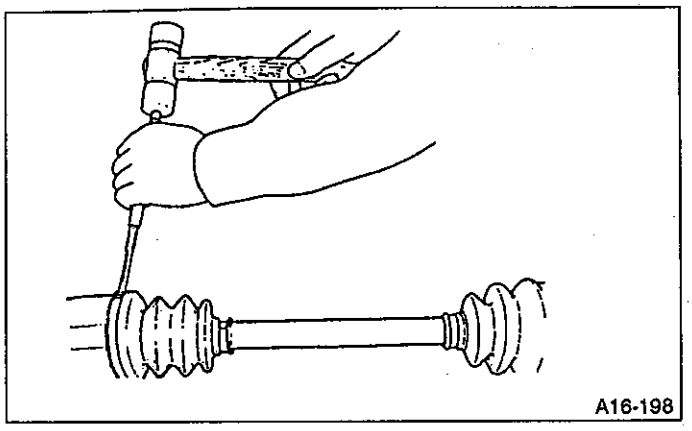

Fig. 88

3) Remove boot band on the small end of DOJ boot in the same manner.
4) Remove the larger end of DOJ boot from DOJ outer race.
5) Pry and remove round circlip located at the neck of DOJ outer race with a screwdriver.

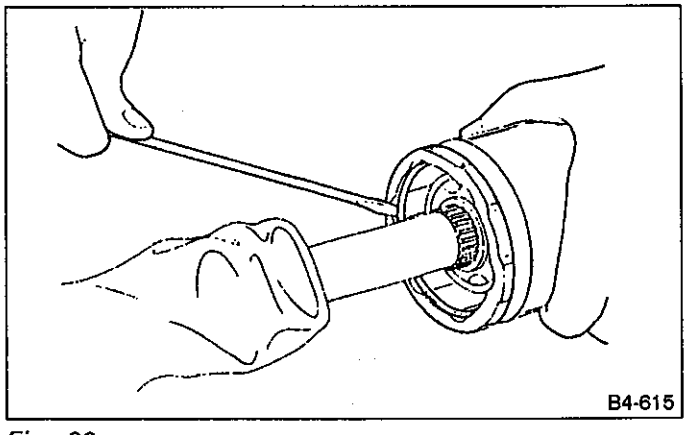

Fig. 89

6) Take out DOJ outer race from shaft ASSY.

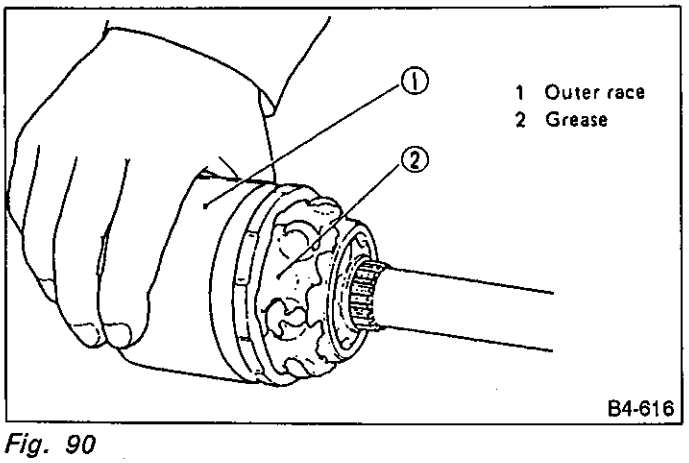

Fig. 90

7) Wipe off grease and take out balls.

a. Disassemble exercising care not to lose balls (6 pcs).
b. The grease is a special grease (grease for constant-velocity joint). Do not confuse with other greases.

8) To remove the cage from the inner race, turn the cage by a half pitch to the track groove of the inner race and shift the cage.
9) Remove snap ring, which fixes inner race to shaft, by using special pliers.
10) Take out DOJ inner race.
11) Take off DOJ cage from shaft and remove DOJ boot.

Be sure to wrap shaft splines with vinyltape to prevent boot from scratches.

12) Remove UFJ/BJ boot in the same procedure as steps 1) to 3).
13) Thus, disassembly of axle is completed, but UFJ/BJ is unable to be disassembled.

C: INSPECTION

Check the removed parts for damage, wear, corrosion and etc. If faulty, repair or replace.
1) DOJ (Double Offset Joint)
Check seizure, corrosion, damage, wear and excessive play.
2) Shaft
Check excessive bending, twisting, damage and wear.
3) UFJ (Under cut Free Joint)
Check seizure, corrosion, damage and excessive play.
4) Boot
Check for wear, warping, breakage or scratches.
5) Grease
Check for discoloration or fluidity.

D: ASSEMBLY

Use specified grease.

UFJ on BJ side:
Molylex No. 2 (P/N 723223010) or Sunlight TB2-A
DOJ side:
AT model — VU-3A702 (Yellow)
MT model — Molylex No. 2 (P/N 723223010) or Sunlight TB2-A

1) Install BJ boot in specified position, and fill it with 60 to 70 g (2.12 to 2.47 oz) of specified grease.
2) Place DOJ boot at the center of shaft.

Be sure to wrap shaft splines with vinyltape to prevent boot from scratches.

3) Insert DOJ cage onto shaft.

Insert the cage with the cut-out side facing the shaft end, since the cage has an orientation.

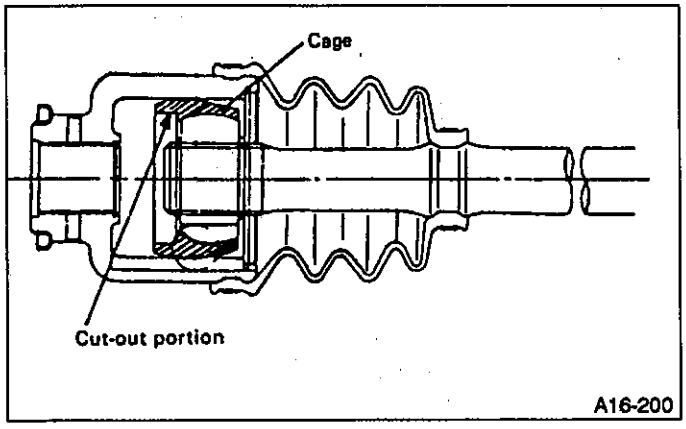

Fig. 91

4) Install DOJ inner race on shaft and fit snap ring with special pliers.

Confirm that the snap ring is completely fitted in the shaft groove.

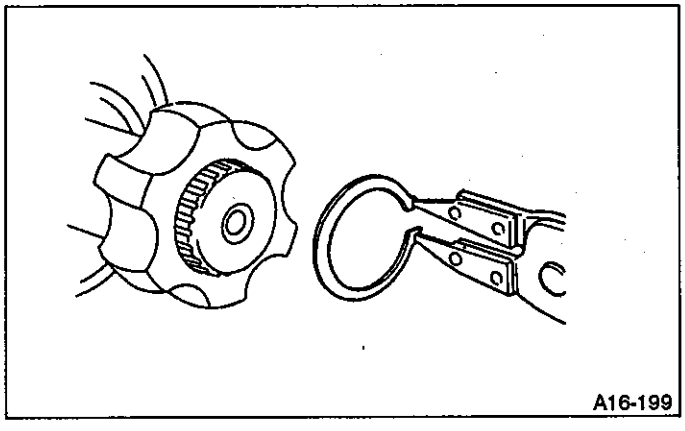

Fig. 92

5) Install cage, which was previously fitted, to inner race fixed upon shaft.

Fit the cage with the protruded part aligned with the track on the inner race and then turn by a half pitch.

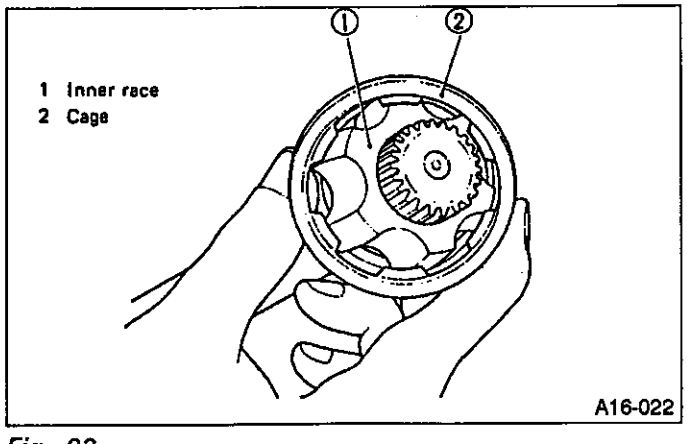

Fig. 93

6) Fill 80 to 90 g (2.82 to 3.17 oz) of specified grease into the interior of DOJ outer race.

7) Apply a coat of specified grease to the cage pocket and six balls.

8) Insert six balls into the cage pocket.

9) Align the outer race track and ball positions and place in the part where shaft, inner race, cage and balls are previously installed, and then fit outer race.

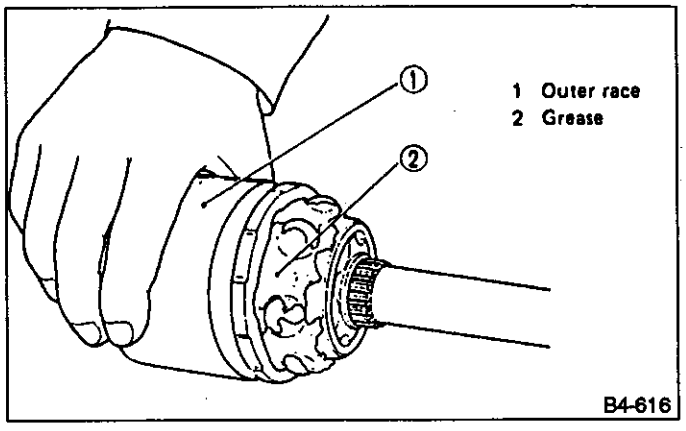

Fig. 94

10) Install circlip in the groove on DOJ outer race.

a. Assure that the balls, cage and inner race are completely fitted in the outer race of DOJ.

b. Exercise care not to place the matched position of circlip in the ball groove of outer race.

c. Pull the shaft lightly and assure that the circlip is completely fitted in the groove.

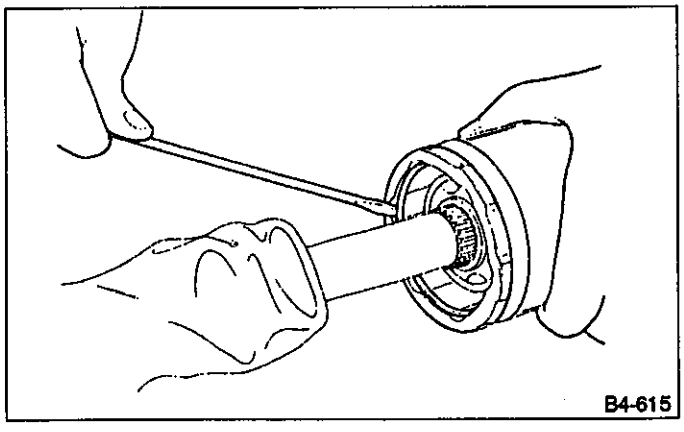

Fig. 95

11) Apply an even coat of the specified grease [20 to 30 g (0.71 to 1.06 oz)] to the entire inner surface of boot. Also apply grease to shaft.

12) Install DOJ boot taking care not to twist it.

a. The inside of the larger end of DOJ boot and the boot groove shall be cleaned so as to be free from grease and other substances.

b. When installing DOJ boot, position outer race of DOJ at center of its travel.

13) Put a band through the clip and wind twice in alignment with band groove of boot.

Use a new band.

14) Pinch the end of band with pliers. Hold the clip and tighten securely.

When tightening boot, exercise care so that the air within the boot is appropriate.

15) Tighten band by using BAND TIGHTENING TOOL (925091000).
a. Tighten band until it cannot be moved by hand.
b. Former BAND TIGHTENING TOOL (925090000) is interchangeable with this 925091000.

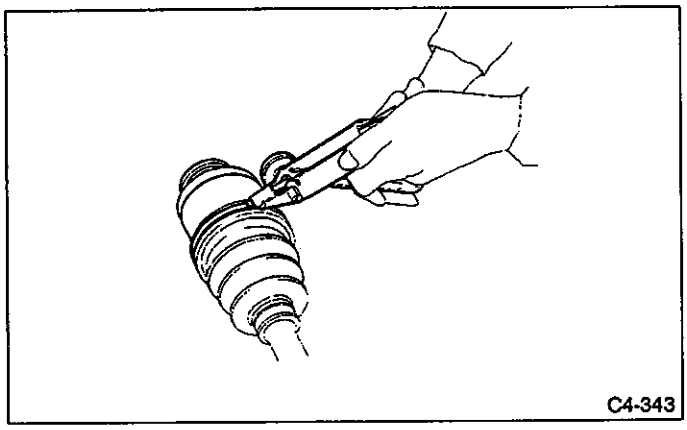

Fig. 96

16) Tap on the clip with the punch provided at the end of BAND TIGHTENING TOOL.
Tap to an extent that the boot underneath is not damaged.

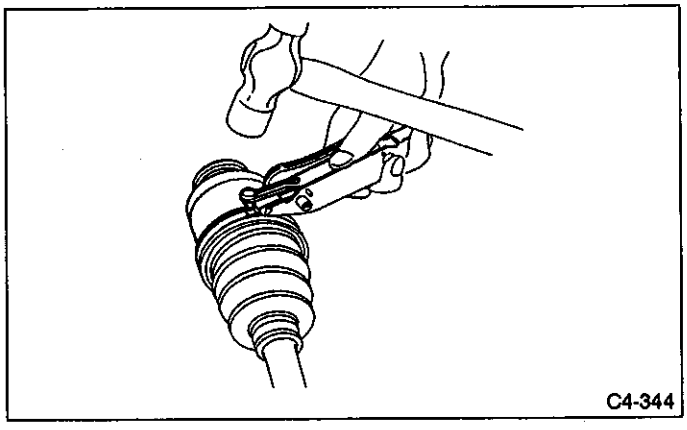

Fig. 97

17) Cut off band with an allowance of about 10 mm (0.39 in) left from the clip and bend this allowance over the clip.
Be careful so that the end of the band is in close contact with clip.

18) Fix up boot on BJ in the same manner.
19) Install protector onto BJ boot band. (For rear side only)
Extend and retract DOJ to provide equal grease coating.

E: INSTALLATION

1. FRONT DRIVE SHAFT

1) Insert UFJ (Under cut free joint) into hub splines.
Be careful not to damage inner oil seal lip.

2) Using AXLE SHAFT INSTALLER (922431000) and ADAPTER (927390000), pull drive shaft into place.
Do not hammer drive shaft when installing it.

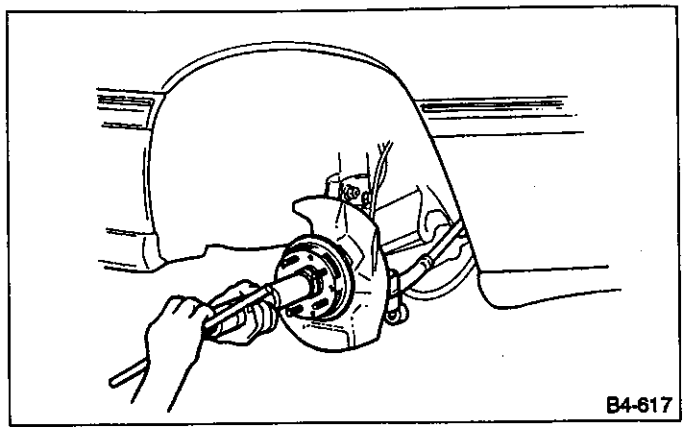

Fig. 98

3) Tighten axle nut temporarily.
4) Install DOJ on transmission spindle and drive spring pin into place.
Always use a new spring pin.

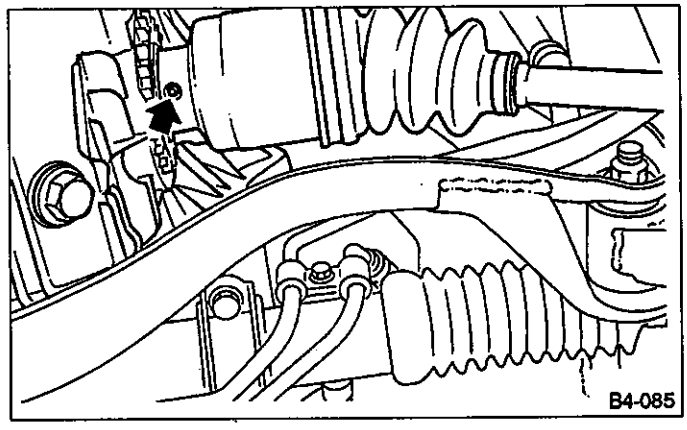

Fig. 99

5) Install transverse link on front crossmember, and tighten self-locking nut.

Torque (self-locking nut):
83 — 113 N•m (8.5 — 11.5 kg-m, 61 — 83 ft-lb)

Use a new self-locking nut.

6) Install stabilizer bracket.
7) While depressing brake pedal, tighten axle nut to the specified torque.

Tightening torque:
167 — 206 N•m (17 — 21 kg-m, 123 — 152 ft-lb)

a. Use a new axle nut.
b. Always tighten axle nut before installing wheel on vehicle. If wheel is installed and comes in contact with ground when axle nut is loose, wheel bearings may be damaged.
c. Be sure to tighten axle nut to specified torque. Do not overtighten it as this may damage wheel bearing.

8) After tightening axle nut, lock it securely.

2. REAR DRIVE SHAFT

1) Insert BJ into rear housing splines.

Be careful not to damage inner oil seal lip.

2) Using AXLE SHAFT INSTALLER (922431000) and ADAPTER (927390000), pull drive shaft into place.

Do not hammer drive shaft when installing it.

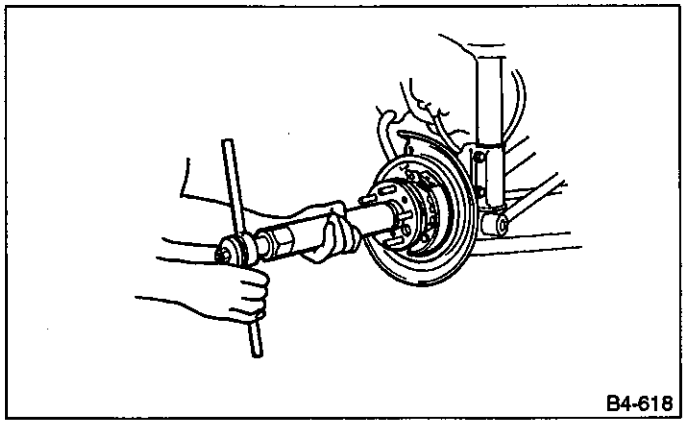

Fig. 100

3) Tighten axle nut temporarily.

4) Install DOJ on rear differential spindle and drive spring pin into place.

Always used a new spring pin.

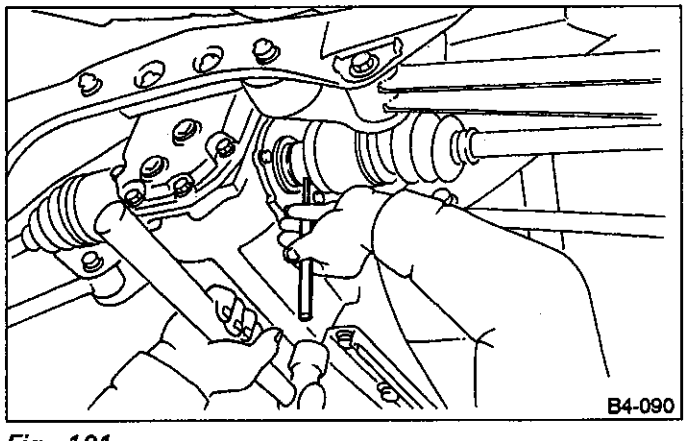

Fig. 101

5) Connect rear housing ASSY to trailing link ASSY, and tighten self-locking nut.

Tightening torque:
98 — 127 N•m (10 — 13 kg-m, 72 — 94 ft-lb)

6) Connect rear housing ASSY to lateral link ASSY, and tighten self-locking nut.

Tightening torque:
118 — 157 N•m (12.0 — 16.0 kg-m, 87 — 116 ft-lb)

7) Install stabilizer bracket.

8) While depressing brake pedal, tighten axle nut using a socket wrench.

Tightening torque:
167 — 206 N•m (17 — 21 kg-m, 123 — 152 ft-lb)

a. Use a new axle nut.
b. Always tighten axle nut before installing wheel on vehicle. If wheel is installed and comes in contact with ground when axle nut is loose, wheel bearings may be damaged.
c. Be sure to tighten axle nut to specified torque. Do not overtighten it as this may damage wheel bearing.

9) After tightening axle nut, lock it securely.

5. Half Wheel Cap

See "SPECIFICATIONS AND SERVICE DATA" for:
- Combination of tire and wheel
- Tire inflation pressure

A: REMOVAL

Pry off the half cap with a wheel cap remover inserted into openings in the cap.

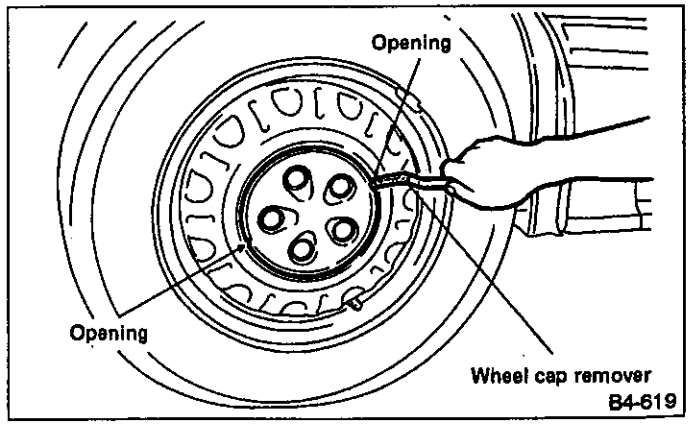

Fig. 102

B: INSTALLATION

Attach the half cap to the disc wheel by tapping it with the palm of your hand.

6. Full Wheel Cap

A: REMOVAL

Pry off the full wheel cap with a wheel cap remover inserted between openings in the cap.

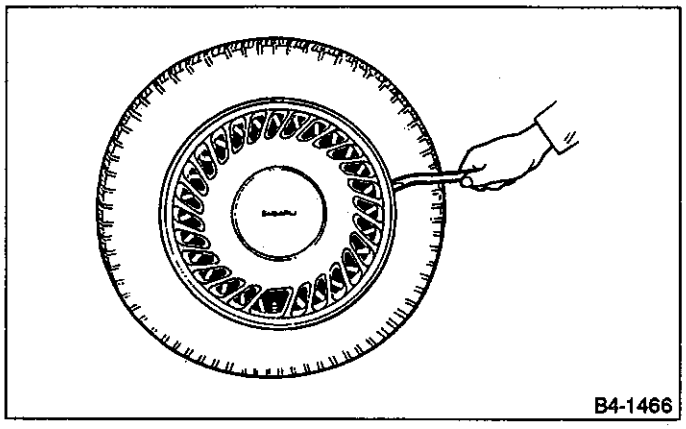

Fig. 103

B: INSTALLATION

Align the valve hole in the wheel cap with the valve on the wheel and secure the wheel cap by tapping four points by hand.

7. Steel Wheel and Tire

1) Deformation or damage on the rim can cause air leakage. Check the rim flange for deformation, crack, or damage, and repair or replace as necessary.
2) Take stone, glass, nail etc. off the tread groove.
3) Replace tire:
   - when large crack on side wall, damage or crack on tread is found.
   - when the "tread wear indicator" appears as a solid band across the tread.

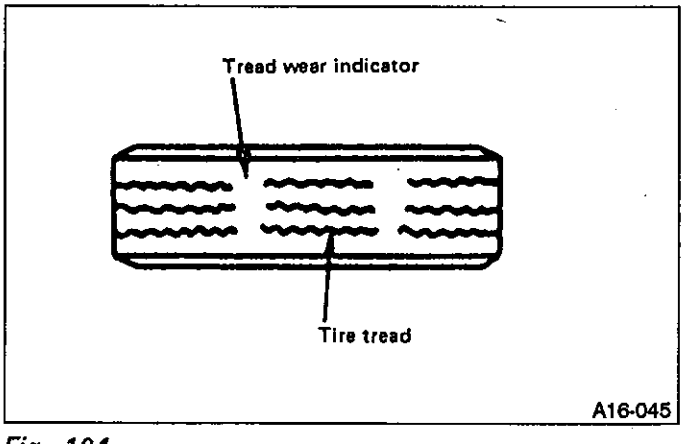

Fig. 104

When replacing a tire, make sure to use only the same size, construction and load range as originally installed. Avoid mixing radial, belted bias or bias tires on the vehicle.

A: INSPECTION OF WHEEL RUNOUT

1) Jack up vehicle until wheels clear the floor.
2) Slowly rotate wheel to check rim "runout" using a dial gauge.

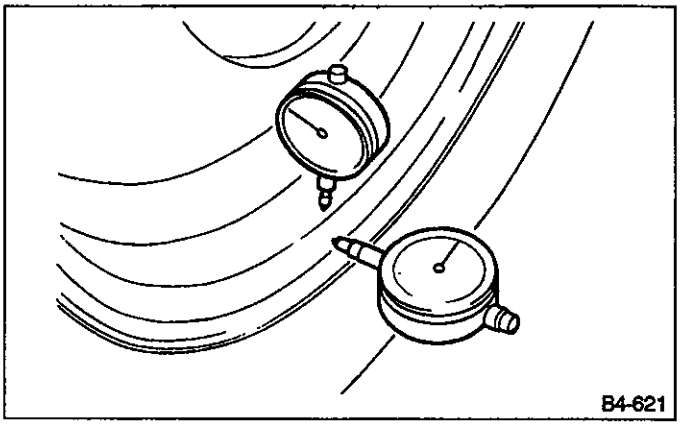

Fig. 105

	Axial runout limit	Radial runout limit
Steel wheel	1.5 mm (0.059 in)	
Aluminum wheel	1.0 mm (0.039 in)	

3) If rim runout exceeds specifications, remove tire from rim and check runout while attaching dial gauge to positions shown in the figure below.

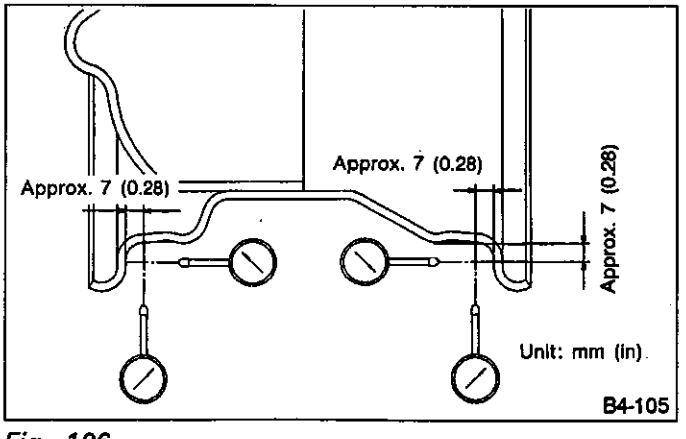

Fig. 106

If measured runout still exceeds specifications, replace the wheel.

8. Aluminum Wheel

A: INSPECTION

Inspection for aluminum wheels is basically the same as the one for steel wheels. However, check the rim flange for cracks or damage, and replace (not repair) aluminum wheel if air leakage is found.

B: PRECAUTIONS

Aluminum wheels are easily scratched. To maintain their appearance and safety, observe the following:
1) Do not damage aluminum wheels during removal, disassembly, installation, wheel balancing, etc. After removing aluminum wheels, place them on a rubber mat, etc.
2) While vehicle is being driven, be careful not to ride over sharp obstacles or allow aluminum wheels to contact the shoulder of the road.
3) When installing tire chain, be sure to install it properly not to have a slack; otherwise it may hit wheel while driving.
4) When washing aluminum wheel, use neutral synthetic detergent and water. Avoid using the cleanser including abrasive, hard brushes or an automatic car washer.

9. Wheel Balancing

1) Proper wheel balance may be lost if the tire is repaired or if it wears. Check the tire for dynamic balance, and repair as necessary.
2) To check for dynamic balance, use a dynamic balancer. Drive in the balance weight on both the top and rear sides of the rim.
3) Some types of balancer can cause damage to the wheel. Use an appropriate balancer when adjusting the wheel balance.
4) Use genuine balance weights.

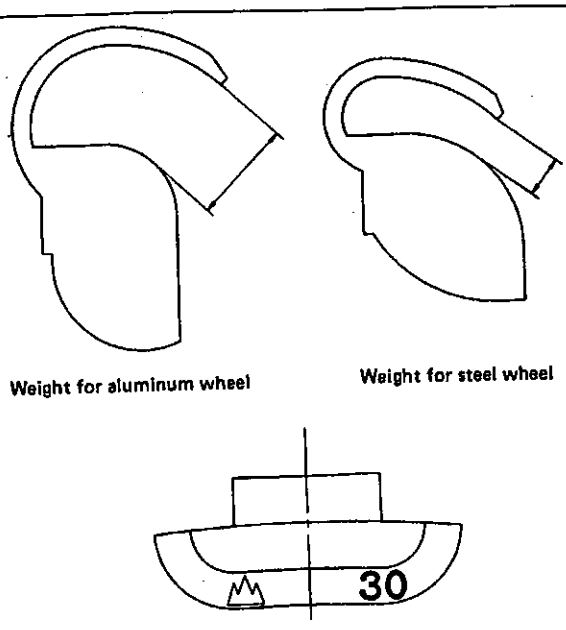

	A mm (in)
Weight for steel wheel	1.6 – 2.0 (0.063 – 0.079)
Weight for aluminum wheel	4.6 – 5.4 (0.181 – 0.213)

B4-106

Fig. 107

a. All balance weights shown in Table are colored silver.
b. 55 g (1.94 oz) weight used with aluminum wheel is not available.
c. Balance weights are available for use with any of 13- to 15-inch wheels.

10. Installation of Wheel Assembly to Vehicle

1) Attach the wheel to the hub by aligning the wheel bolt hole with the hub bolt.
2) Temporarily attach the wheel nuts to the hub bolts. (In the case of aluminum wheel, use SUBARU genuine wheel nut for aluminum wheel.)
3) Manually tighten the nuts making sure the wheel hub hole is aligned correctly to the guide portion of hub.
4) Tighten the wheel nuts in a diagonal selection to the specified torque. Use a wheel nut wrench.

Wheel nut tightening torque:
78 — 98 N•m (8 — 10 kg-m, 58 — 72 ft-lb)

a. Tighten the wheel nuts in two or three steps by gradually increasing the torque and working diagonally, until the specified torque is reached. For drum brake models, excess tightening of wheel nuts may cause wheels to "judder".

b. Do not depress the wrench with a foot; Always use both hands when tightening.
c. Make sure the bolt, nut and the nut seating surface of the wheel are free from oils.

5) If a wheel is removed for replacement or for repair of a puncture, retighten the wheel nuts to the specified torque after running 1,000 km (600 miles).

11. Tire Rotation

If tires are maintained at the same positions for a long period of time, uneven wear results. Therefore, they should be periodically rotated.
This lengthens service life of tires.

When rotating tires, replace unevenly worn or damaged tires with new ones.

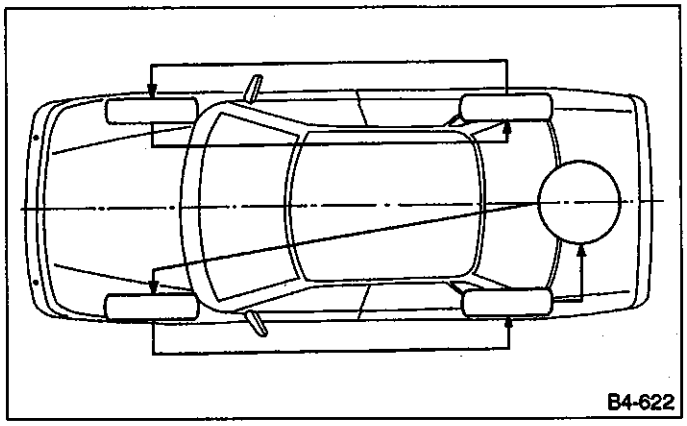

Fig. 108

SUBARU®

1992

SERVICE MANUAL

		Page
M	MECHANISM AND FUNCTION	2
	1. Tilt Steering Column	2
	2. VGR (Variable Gear Ratio) Gearbox	4
	3. Power Steering System	5
S	SPECIFICATIONS AND SERVICE DATA	11
C	COMPONENT PARTS	13
	1. Steering Wheel & Column (Rigid)	13
	2. Steering Wheel & Column (Tilt)	14
	3. Gearbox	15
	4. Oil Pump & Tank	16
	5. Power Steering Oil Pump	17
W	SERVICE PROCEDURE	18
	1. Steering Column (Rigid)	18
	2. Tilt Steering Column	21
	3. Steering Gearbox (Power Steering System)	24
	4. Control Valve (Power Steering Gearbox)	34
	5. Hose ASSY (Power Steering System)	43
	6. Oil Pump (Power Steering System)	45
T	TROUBLESHOOTING	53
	1. Power Steering	53

M MECHANISM AND FUNCTION

1. Tilt Steering Column

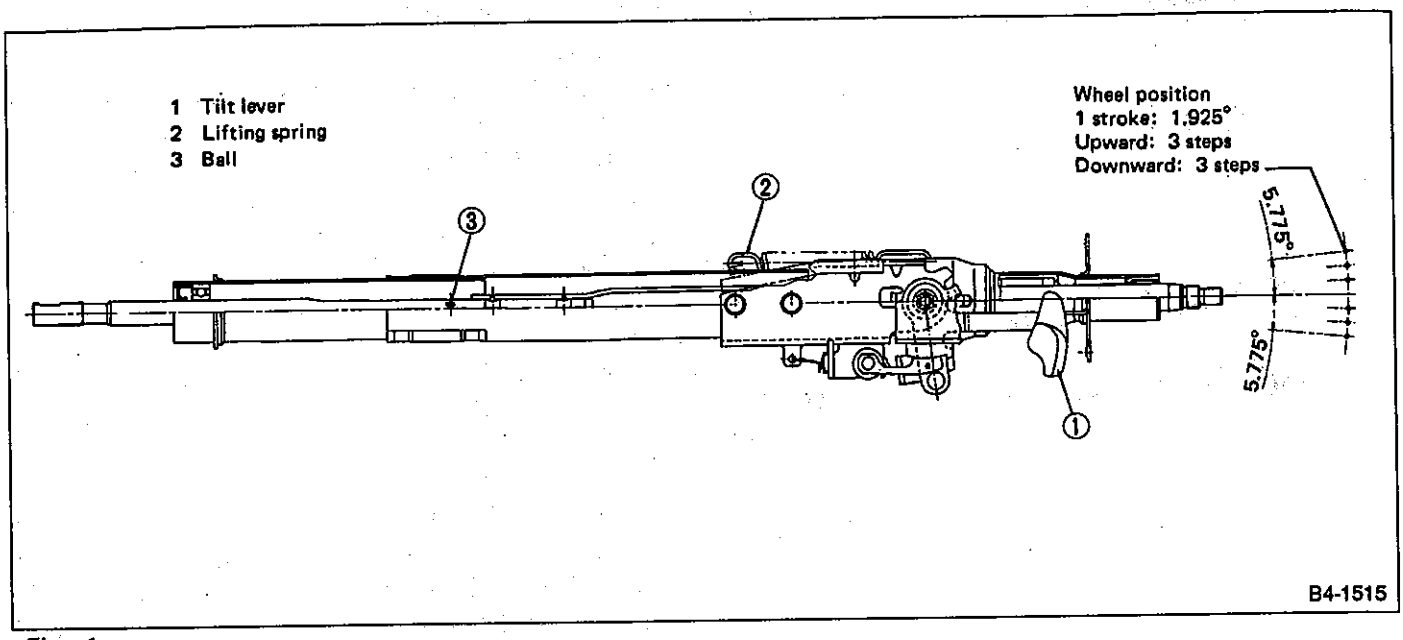

Fig. 1

A: FEATURE

1. TILT STEERING COLUMN

The tilt position is determined by engagement of the movable gear and stationary gear.

2. IMBEDDED BALL TYPE ENERGY-ABSORBING MECHANISM

1) Construction of the steering column is simplified to reduce weight since energy absorption is no longer required for the steering column.
2) The energy-absorbing characteristic is regulated by imbedded ball height.

B: OPERATION

1. TILT STEERING COLUMN

1) When the tilt lever is turned upward, the lock gear is disengaged from the sector gear. This causes the coil spring to tilt the steering column up.
2) With tilt lever turned upward, adjust steering wheel position.
3) Tilt lever has 7 adjustable positions — 3 position each upward and downward from Neutral.

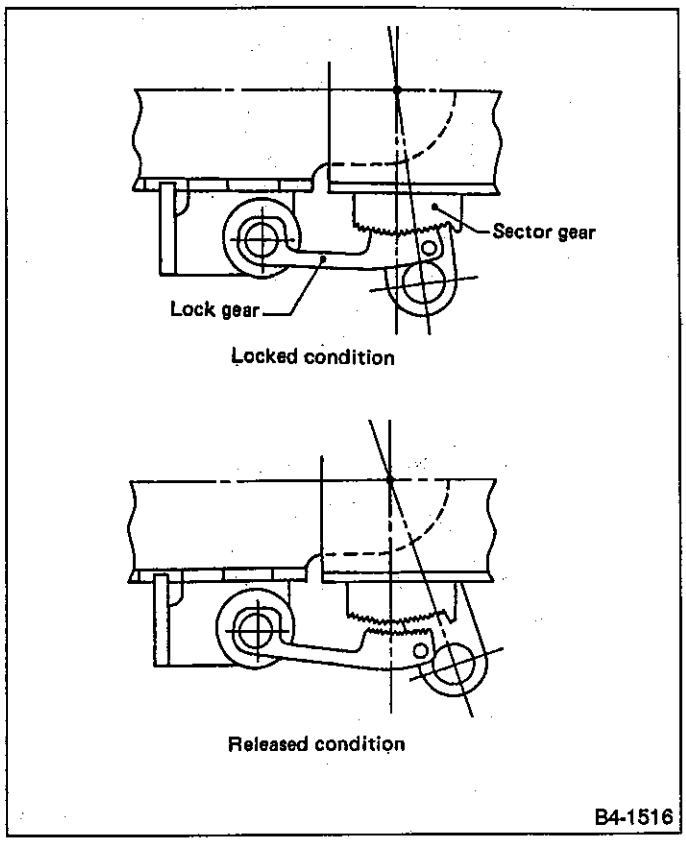

Fig. 2

2. IMBEDDED BALL TYPE ENERGY-ABSORBING MECHANISM

1) The protrusion of the ball imbedded in the steering shaft provides plastic deformation of the cube's inner wall to effectively absorb energy encountered.

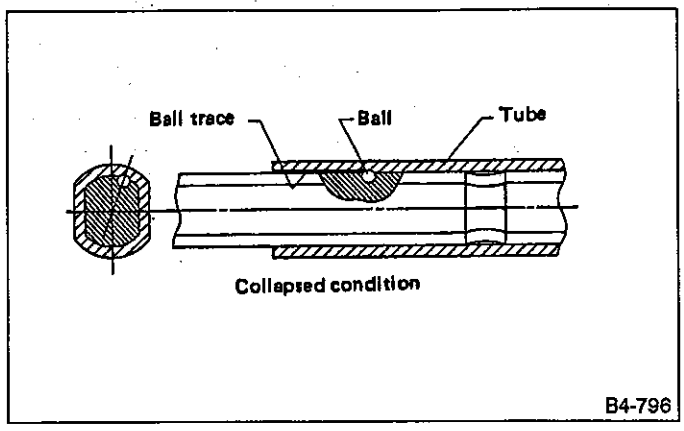

Fig. 3

- The steering column is held by a support beam located close to the steering wheel to reduce the overhang. The upper bearing is also located close to the steering wheel to increase supporting rigidity, as well as to reduce the problem of a shaking or shimmying wheel.

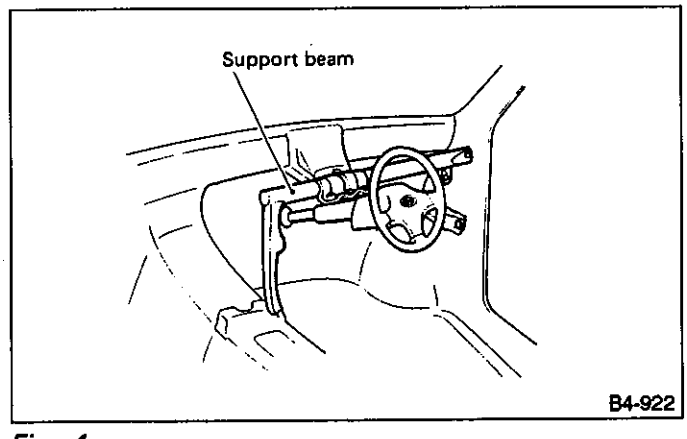

Fig. 4

2. VGR (Variable Gear Ratio) Gearbox

The variable gear ratio (VGR) gearbox is adopted on the manual steering model to reduce steering effort when making a full turn. This VGR gearbox adopts different rack tooth shapes between the straight-ahead position and the fully turned position. This varies the pitch circle diameter of the pinion which engages with the rack teeth so as to provide a solid steering feel when steering in the straight ahead position and a light steering feel during turns.

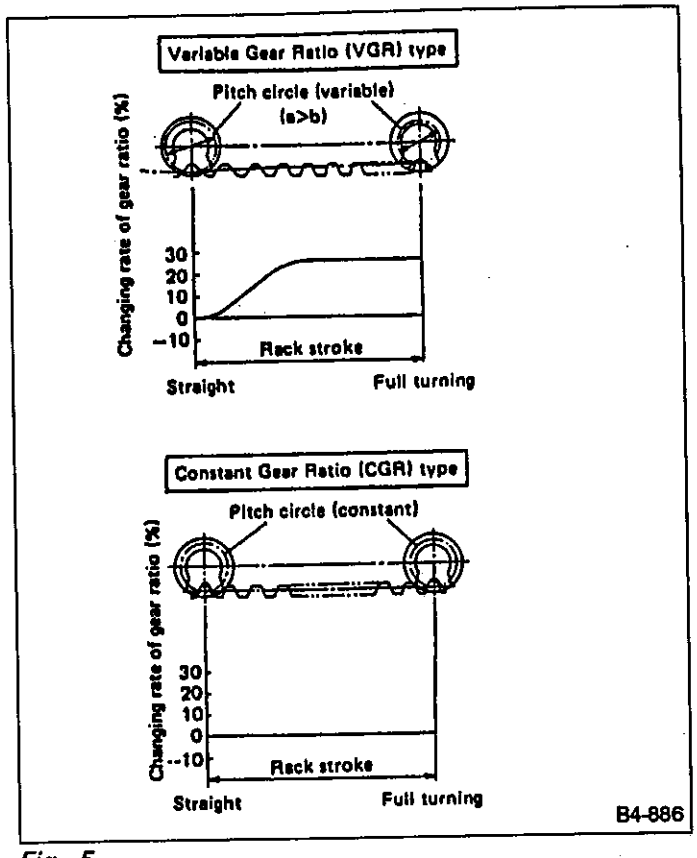

Fig. 5

The gear ratio is approx. 20 in the straight ahead position and approx. 25 in the full turn position.

3. Power Steering System

1. HYDRAULIC SYSTEM

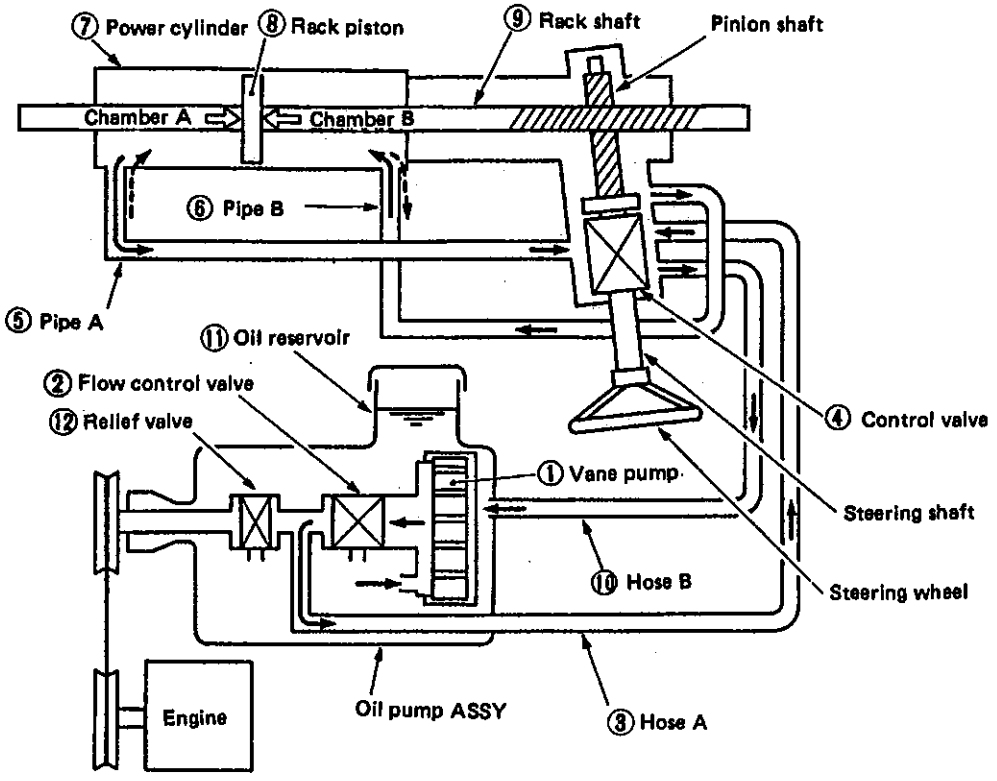

Fig. 6

1) Vane pump ① is belt-driven from the engine to discharge oil under pressure.
2) Oil under pressure is controlled by the flow control valve ② located inside the oil pump ASSY in response to engine speed and is delivered to control valve ④ via hose A ③.
3) When the steering wheel is turned, control valve ④ connected to the pinion shaft activates to form an oil flow circuit corresponding to the rotation direction of the steering wheel. Oil will then be delivered to chamber A or B via pipe A ⑤ or B ⑥.
4) Oil in chamber A or B acts on rack pinion ⑧ to produce the force required to move rack shaft ⑨ to the left or the right. This helps reduce the effort required to operate the steering wheel.
5) Movement of rack piston ⑧ in turn causes oil in the other chamber to return to oil reservoir ⑪ via pipe A ⑤ or B ⑥, control valve ④ and hose B ⑩.

- If the hydraulic system becomes inoperative, the steering shaft will then be connected to the pinion shaft mechanically via control valve ④. Thus, the steering shaft can act as one similar to a manual steering system to move the rack and pinion.
- To control the maximum oil pressure setting, relief valve ⑫ is built into flow control valve ② of the oil pump ASSY to release excess oil pressure.

2. GEARBOX ASSY

1) Power cylinder

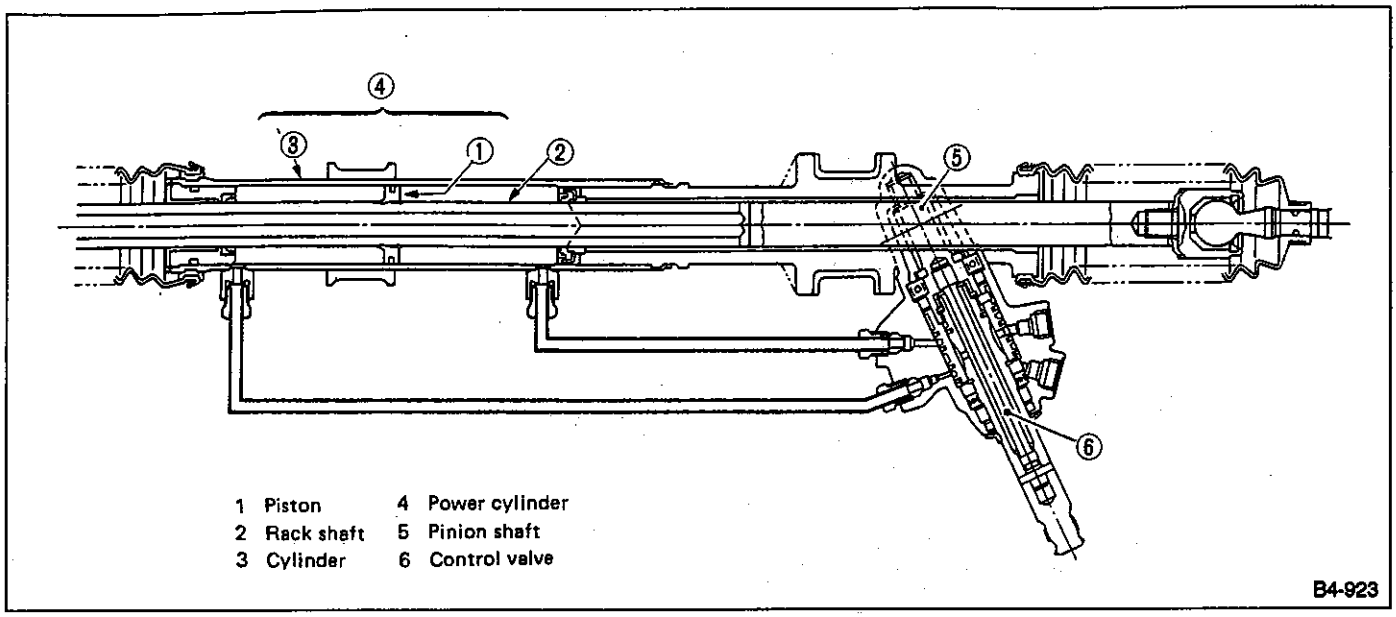

Fig. 7

The gearbox is integrated with a built-in control valve and power cylinder. The rack shaft is used as a power cylinder piston and a rotary control valve is located in such a manner as to enclose the pinion shaft.

The control valve and power cylinder are connected to each other by two pipes through which hydraulic oil flows.

2) Control valve

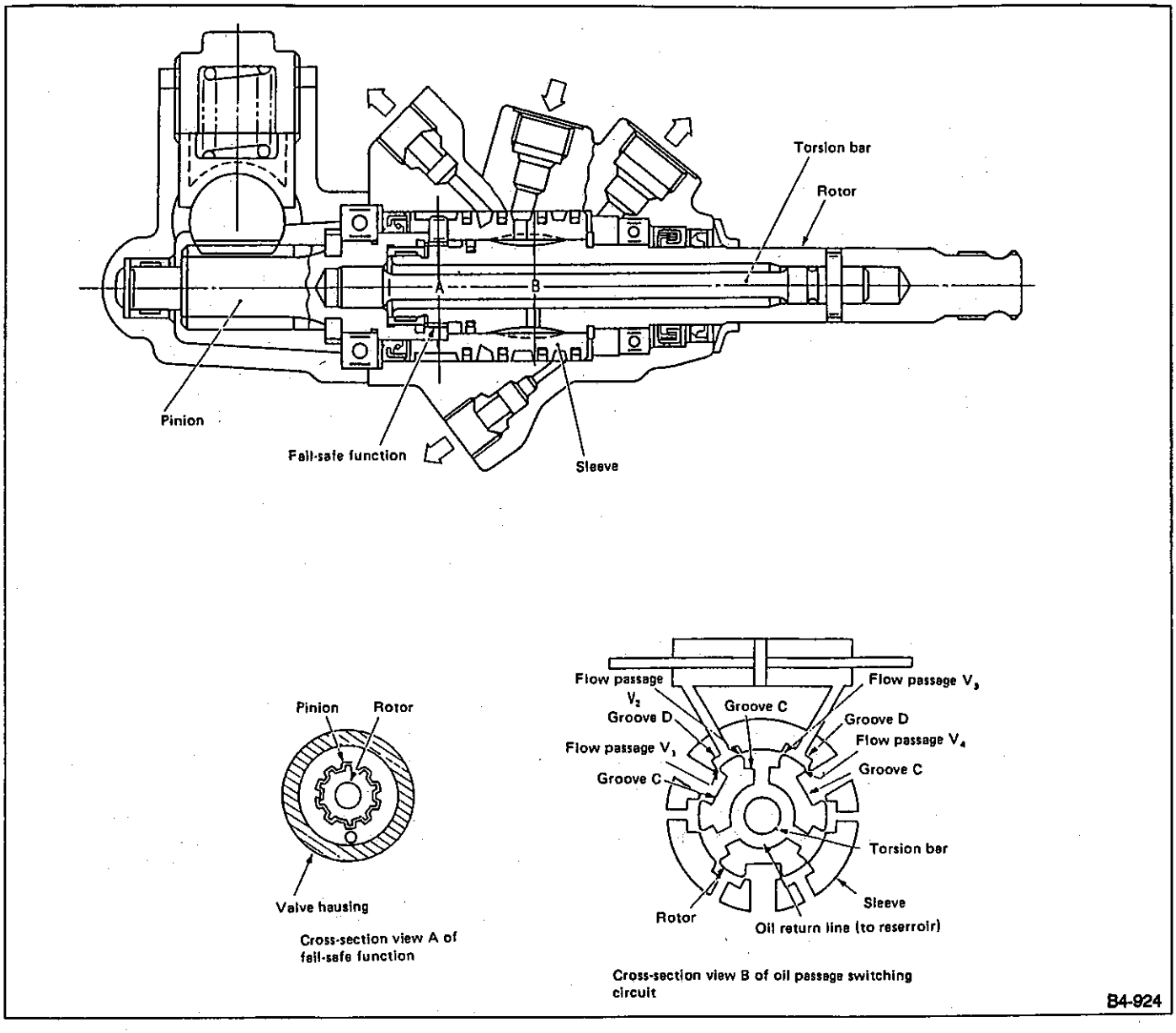

Fig. 8

The control valve consists of a rotor (which rotates together with the steering shaft), a pinion (which is connected to the rotor and torsion bar), and a sleeve (which rotates together with the pinion). Oil grooves C and D are located in the rotor and sleeve to form oil flow passages V_1 through V_4.
The pinion and rotor are meshed with adequate clearance. They utilize a fail-safe design.

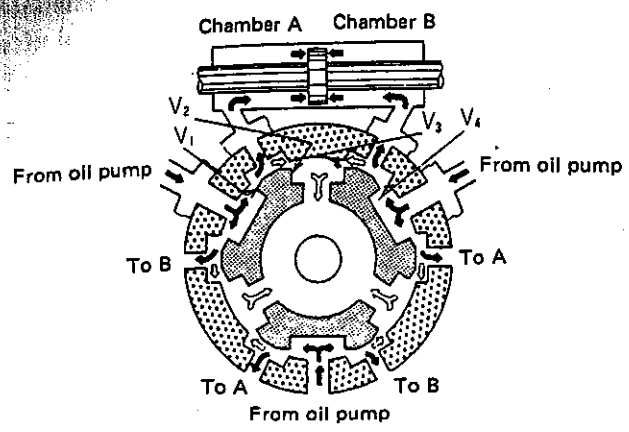

When no steering force is applied.

B4-925

Fig. 9

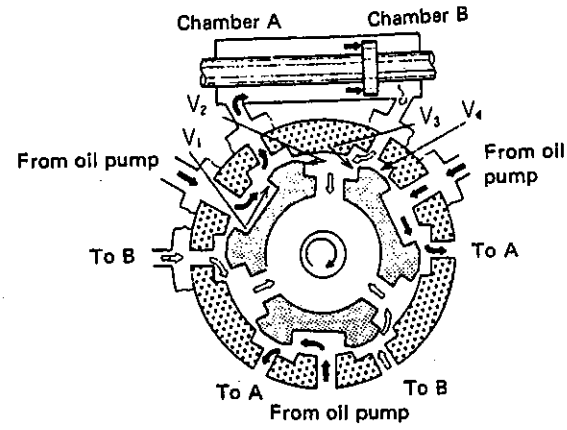

When steering force is applied.

B4-926

Fig. 10

3) Operating principle

When the torsion bar twists in relation to the steering force, a relative rotational displacement occurs between the rotor and sleeve. This displacement changes the cross-sectional area of oil passages V_1, V_2, V_3 and V_4, which in turn switches oil passages and controls oil pressure.

(1) When no steering force is applied:

The rotor and sleeve are held at the neutral position. Oil passages V_1, V_2 and V_3, which are formed by valve grooves C and D are open equally. Under this condition, oil delivered from the oil pump returns to the oil reservoir so that neither oil pressure builds up nor does the power cylinder activate.

(2) When steering force is applied:

When the steering wheel is turned to the right, for example, oil passages V_1 and V_2 open while oil passages V_2 and V_4 nearly close.

At this point, oil under pressure in chamber A increases in response to the throttle position of oil passages V_2 and V_4 so that the rack piston moves to the right. Oil in chamber B, on the other hand, is discharged through oil passage V_3, returning to the oil reservoir.

4) Fail-safe function

If oil pressure fails to build up due to a broken oil pump drive belt, torque is transmitted from the valve rotor to the pinion by way of the fail-safe function.

3. OIL PUMP & TANK

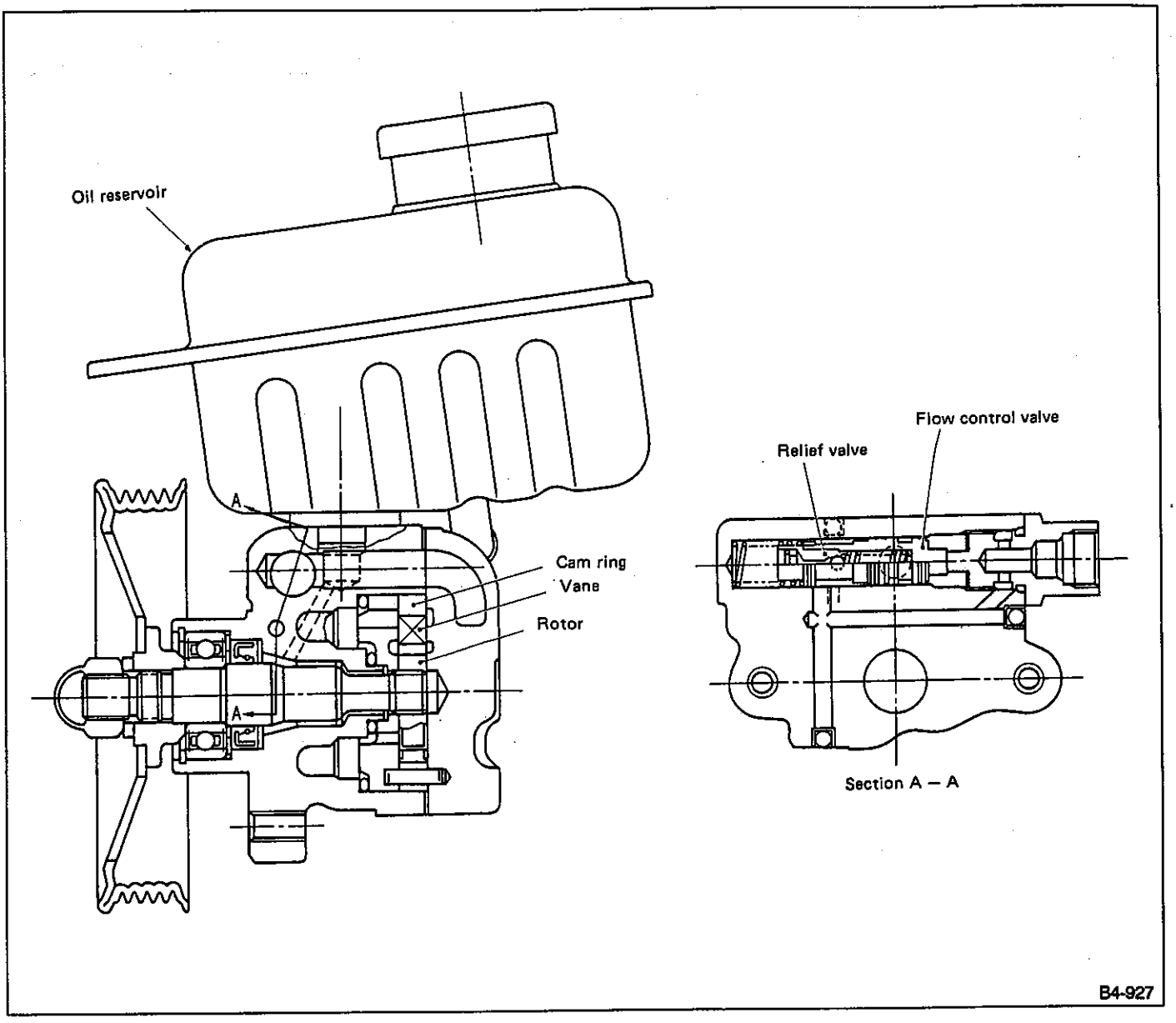

Fig. 11

The oil pump is belt-driven from the engine. The oil flow is controlled in response to engine speed so that an adequately "heavy" steering effort is maintained during high-speed operation.
The oil pump is a vane type. It is integrated with an oil reservoir and houses the flow control and relief-valves.
1) Vane pump
The vane pump consists of a rotor, cam rings, and ten vanes.
When the rotor rotates, the vane located in each groove of the rotor is radially swung out by centrifugal force and pressed against the cam ring. The tip of the vane slides along the inner oval wall of the cam ring so that oil is delivered to the chamber formed by the rotor, cam ring and vane by way of a pea-shaped groove. Oil from the chamber is discharged into the oil circuit via the discharge port.

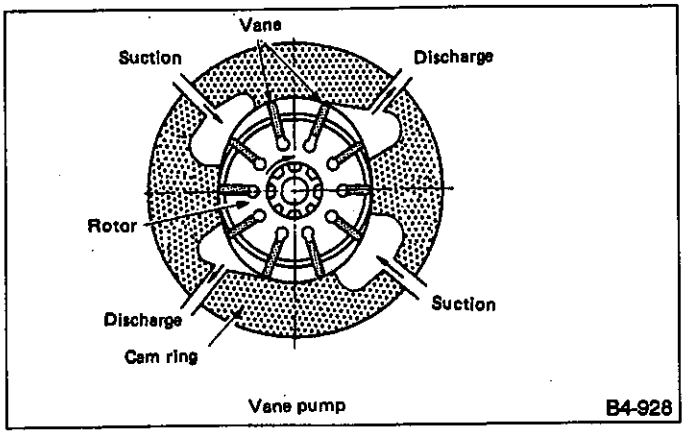

Fig. 12

2) Flow control valve

The flow control valve adequately regulates the discharge flow of oil which increases in proportion to pump speed and delivers it to the gearbox. It consists of orifices 1 and 2, valve spool, return port and flow control spring. When a pressure differential occurs between the front and rear of orifice 2 in response to increases in discharge flow, the valve spool moves against the tension of the flow control spring so that the oil flow is controlled by the open and close operation of the return port and orifice 3.

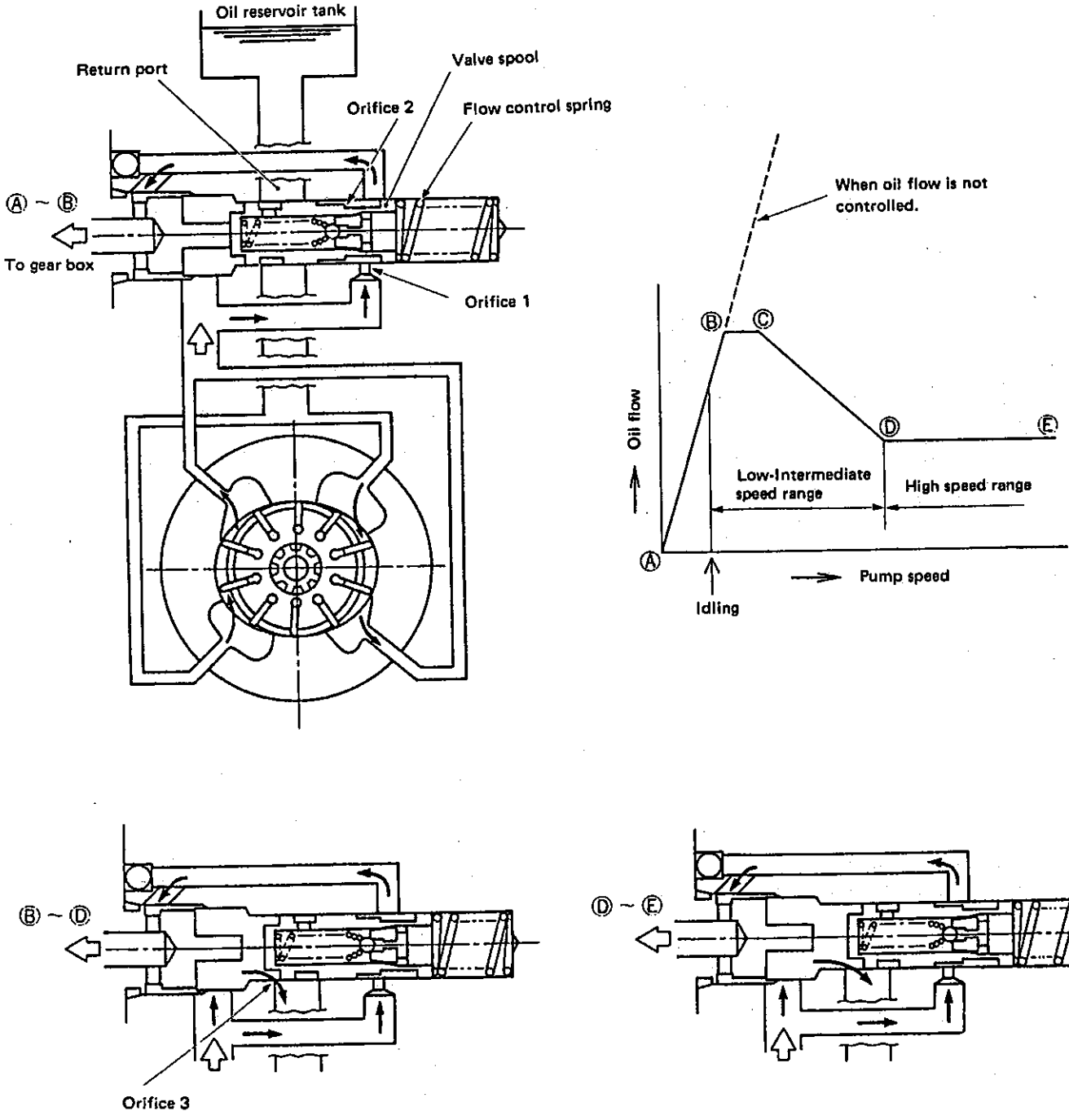

B4-929

Fig. 13

S SPECIFICATIONS AND SERVICE DATA

A: SPECIFICATIONS

Whole system	Minimum turning radius m (ft)		Non-TURBO: 5.1 (16.7)
			TURBO: 5.3 (17.4)
	Steering angle (Inside-Outside)		Non-TURBO: 39° — 33.5°
			TURBO: 36.5° — 32.0°
	Steering wheel diameter mm (in)		385 (15.16)
	Overall gear ratio (Turns, lock to lock)	Manual steering	20 — 25 (4.5)
		Power steering	16.0 (3.3)
Gearbox	Type		Rack and pinion, Integral
	Backlash		0 (Automatically adjustable)
	Valve (Power steering system)		Rotary valve
Pump (Power steering system)	Type		Vane pump
	Oil tank		Installed on pump
	Output cm^3 (cu in)/rev.		7.2 (0.439)
	Relief pressure kPa (kg/cm^2, psi)		1600•1800 cc 6,375 (65, 924) TURBO•2000•2200 cc 7,355 (75, 1,067)
	Hydraulic fluid control		Dropping in response to increased engine revolutions
	Hydraulic fluid ℓ (US qt, Imp qt)		1,000 rpm: 7 (7.4, 6.2) 3,000 rpm: 3.5 (3.7, 3.1)
	Range of revolution rpm		500 — 7,500
	Revolving direction		Clockwise
Working Fluid (Power steering system)	Name		ATF DEXRON II
	Capacity ℓ (US qt, Imp qt)		Oil tank : 0.3 (0.3, 0.3) Total : 0.7 (0.7, 0.6)

B: SERVICE DATA

	ITEM		STANDARD	SERVICE LIMIT
Steering wheel	Free play	mm (in)	17 (0.67)	
Turning angle	Inner tire & wheel		Non-TURBO:39°	
			TURBO:36.5°	
	Outer tire & wheel		Non-TURBO: 33.5°	
			TURBO: 32.0°	
Steering shaft	Clearance between steering wheel and column cover	mm (in)	3.0 (0.118)	
Steering gearbox (Manual steering system)	Rack shaft	Bend limit (Run-out)	0.2 mm (0.008 in)	
	Pinion	Free play limit	0.3 mm (0.012 in)	
		Rotating torque	Within 30 mm (1.18 in) from rack center at straight ahead position: Less than 0.9 N•m (0.09 kg-m, 0.7 ft-lb) Maximum allowable value: 1.4 N•m (0.14 kg-m, 1.0 ft-lb)	
Steering gearbox (Power steering system)	Sliding resistance	N (kg, lb)	240.3 (24.5, 54.0) or less	
	Rack shaft play in radial direction	mm (in)		
	Right-turn steering		0.15 (0.0059) or less	
	Left-turn steering		Horizontal movement: 0.3 (0.012) or less Vertical movement: 0.15 (0.0059) or less	
	Input shaft play In radial direction	mm (in)	0.18 (0.0071) or less	
	In axial direction		0.1 (0.004) or less	
	Turning resistance	N (kg, lb)	Within 30 mm (1.18 in) from rack center in straight ahead position: Less than 11.18 (1.14, 2.51) Maximum allowable value: 12.7 (1.3, 2.9)	
Oil pump (Power steering system)	Pulley shaft	mm (in)		
	Radial play		0.4 (0.016) or less	
	Axial play		0.9 (0.035) or less	
	Pulley			
	Ditch deflection	mm (in)	1.0 (0.039) or less	
	Resistance to rotation	N (kg, lb)	9.22 (0.94, 2.07) or less	
	Regular pressure	kPa (kg/cm², psi)	981 (10, 142) or less	
	Relief pressure	kPa (kg/cm², psi)	7,355 — 7,846 (75 — 80, 1,067 — 1,138)	
Steering wheel effort (Power steering system)	At standstill with engine idling on a concrete road	N (kg, lb)	31.4 (3.2, 7.1) or less	
	At standstill with engine stalled on a concrete road	N (kg, lb)	147 (15, 33) or less	

C: RECOMMENDED POWER STEERING FLUID

Recommended power steering fluid	Manufacturer
ATF DEXRON II	B.P.
	CALTEX
	CASTROL
	MOBIL
	SHELL
	TEXACO

C COMPONENT PARTS

1. Steering Wheel & Column (Rigid)

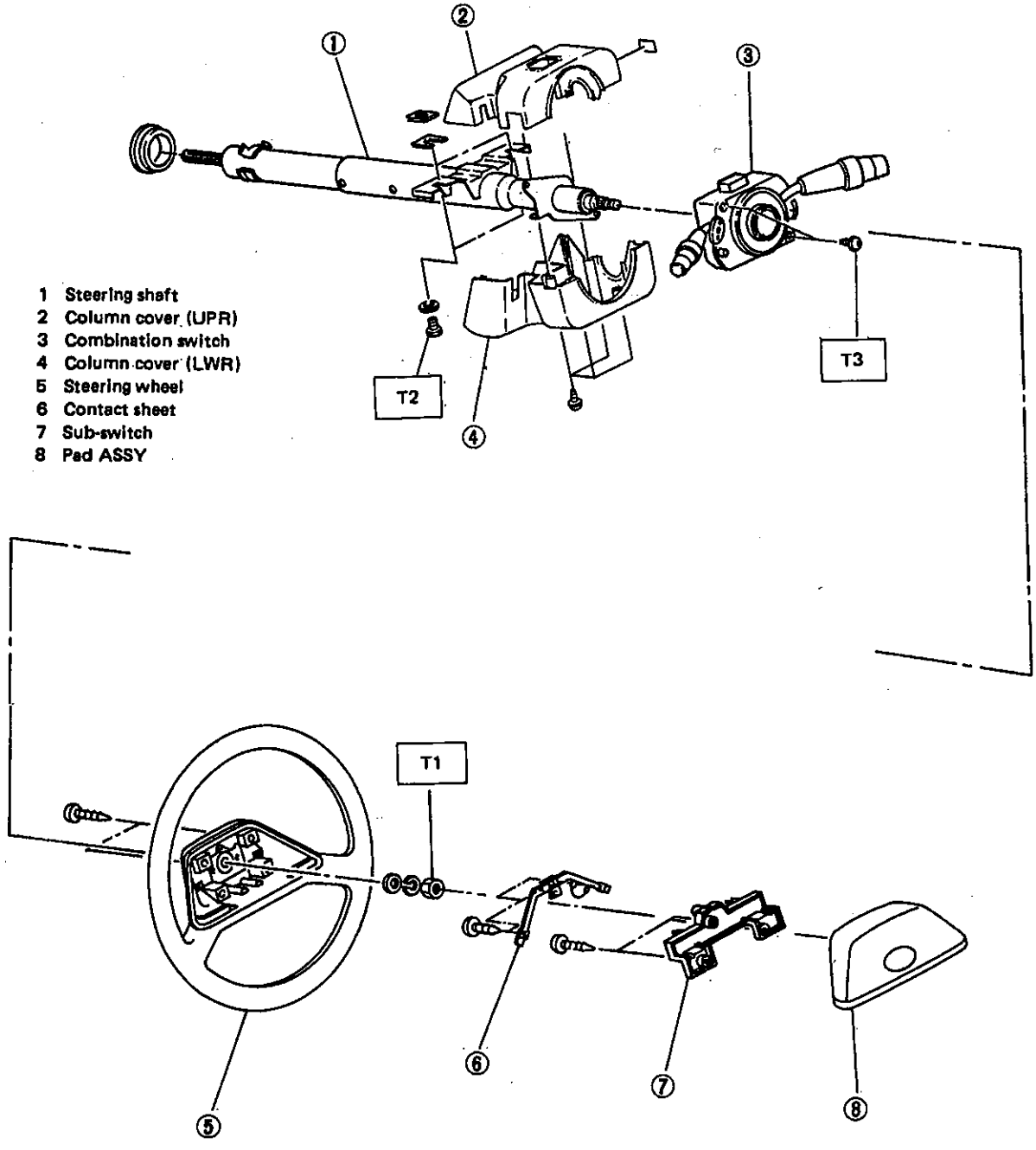

Tightening torque: N·m (kg-m, ft-lb)
T1: 29 – 39 (3.0 – 4.0, 22 – 29)
T2: 20 – 29 (2.0 – 3.0, 14 – 22)
T3: 1.0 – 1.4 (0.10 – 0.14, 0.7 – 1.0)

B4-806

Fig. 14

2. Steering Wheel & Column (Tilt)

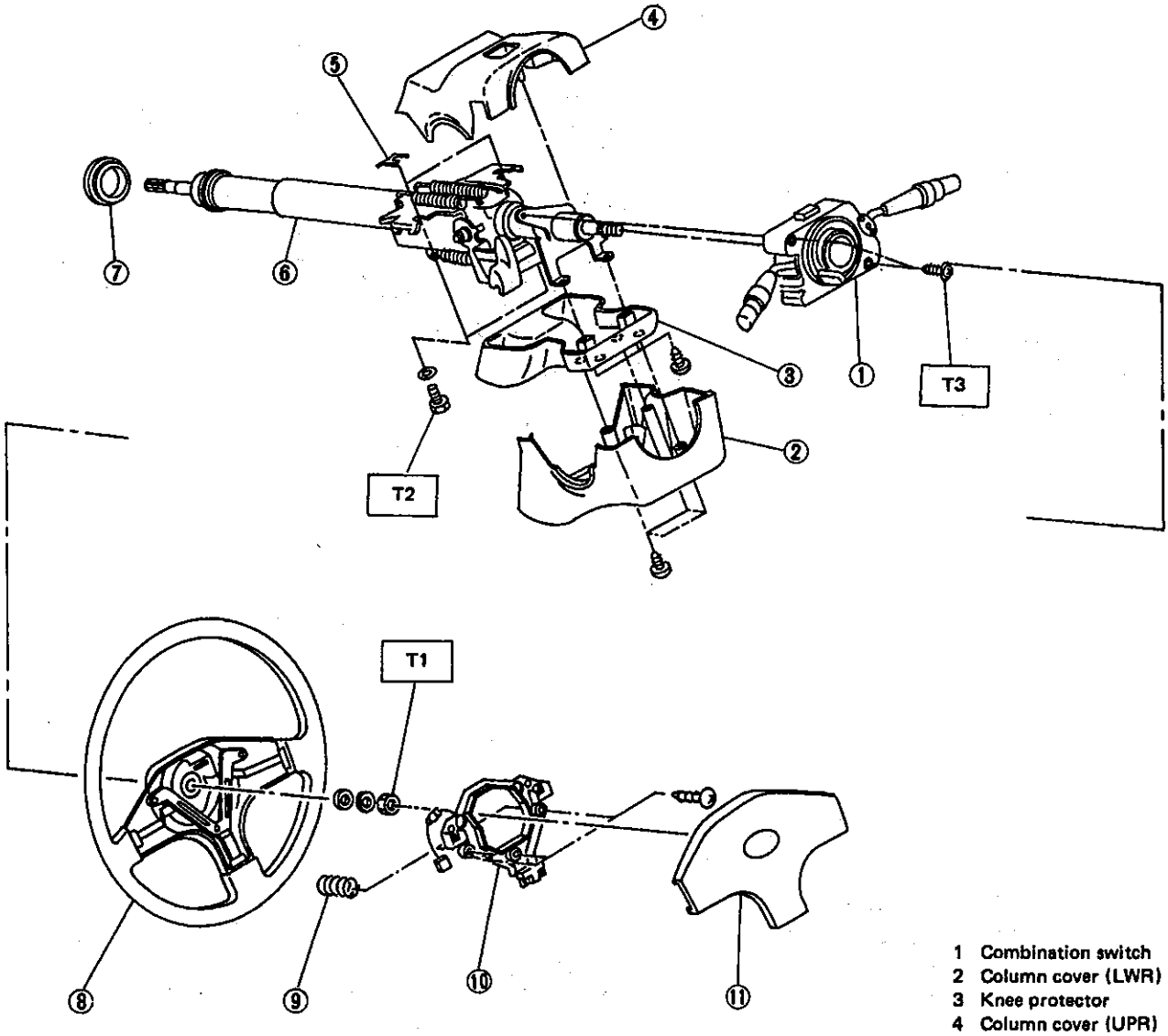

Tightening torque: N·m (kg-m, ft-lb)
T1: 29 – 39 (3.0 – 4.0, 22 – 29)
T2: 20 – 29 (2.0 – 3.0, 14 – 22)
T3: 1.0 – 1.4 (0.10 – 0.14, 0.7 – 1.0)

1 Combination switch
2 Column cover (LWR)
3 Knee protector
4 Column cover (UPR)
5 Coating plate
6 Steering shaft
7 Bushing
8 Steering wheel
9 Spring
10 Sub-switch
11 Pad ASSY

B4-1517

Fig. 15

3. Gearbox

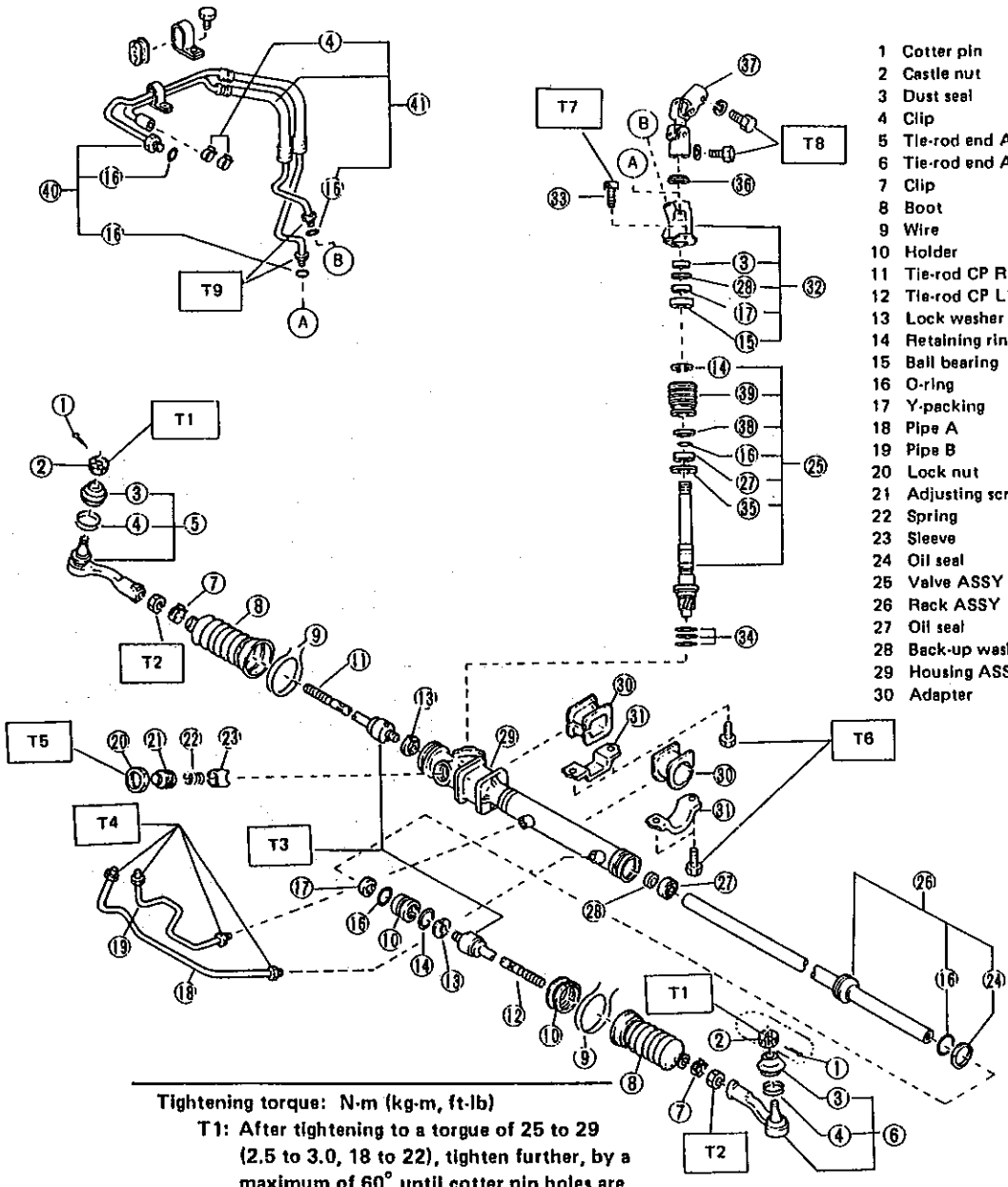

1 Cotter pin
2 Castle nut
3 Dust seal
4 Clip
5 Tie-rod end ASSY (R)
6 Tie-rod end ASSY (L)
7 Clip
8 Boot
9 Wire
10 Holder
11 Tie-rod CP RH
12 Tie-rod CP LH
13 Lock washer
14 Retaining ring
15 Ball bearing
16 O-ring
17 Y-packing
18 Pipe A
19 Pipe B
20 Lock nut
21 Adjusting screw
22 Spring
23 Sleeve
24 Oil seal
25 Valve ASSY
26 Rack ASSY
27 Oil seal
28 Back-up washer
29 Housing ASSY
30 Adapter

Tightening torque: N·m (kg·m, ft·lb)

T1: After tightening to a torque of 25 to 29 (2.5 to 3.0, 18 to 22), tighten further, by a maximum of 60° until cotter pin holes are aligned.
T2: 78 – 88 (8.0 – 9.0, 58 – 65)
T3: 69 – 88 (7.0 – 9.0, 51 – 65)
T4: 16 – 24 (1.6 – 2.4, 12 – 17)
T5: 29 – 49 (3.0 – 5.0, 22 – 36)
T6: 47 – 71 (4.8 – 7.2, 35 – 52)
T7: 20 – 29 (2.0 – 3.0, 14 – 22)
T8: 21 – 26 (2.1 – 2.7, 15 – 20)
T9: 10 – 20 (1.0 – 2.0, 7 – 14)

31 Clamp
32 Valve housing ASSY
33 Socket bolt
34 Shim
35 Spacer
36 Dust cover
37 Universal joint ASSY
38 Seal ring
39 Sleeve ASSY
40 Hose A
41 Hose B

B4-930

Fig. 16

4. Oil Pump & Tank

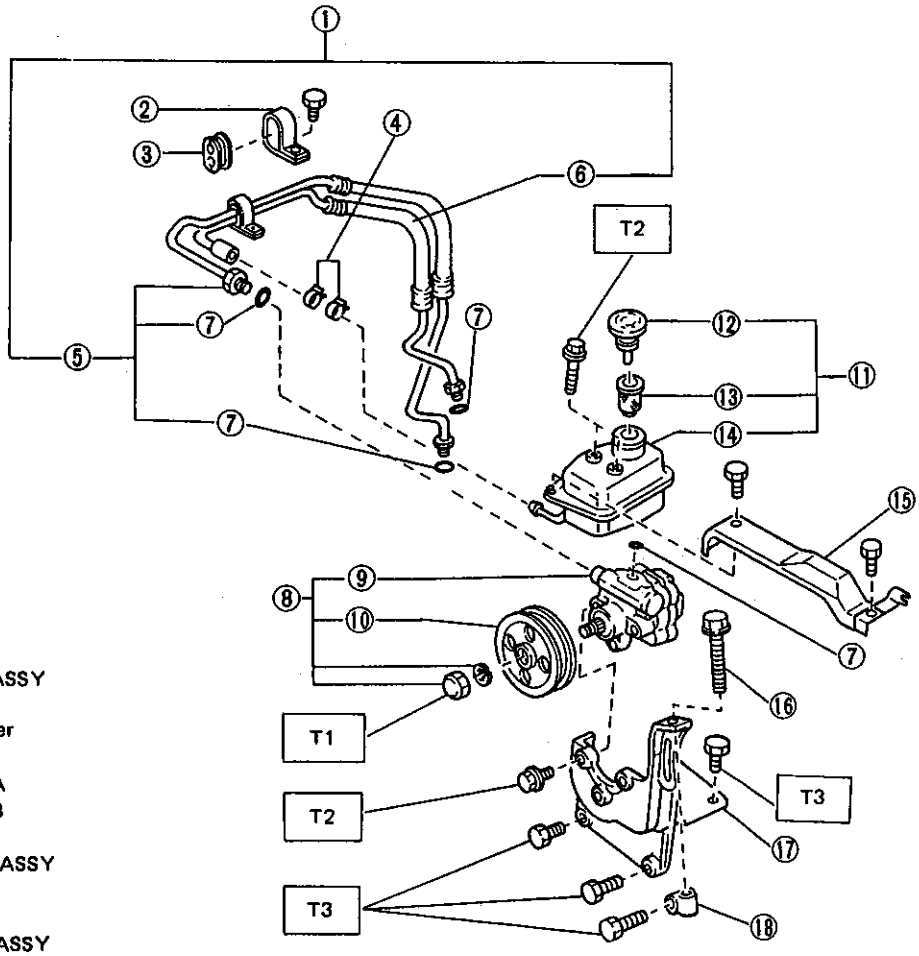

1 Hose ASSY
2 Clamp
3 Adapter
4 Clip
5 Hose A
6 Hose B
7 O-ring
8 Pump ASSY
9 Pump
10 Pulley
11 Tank ASSY
12 Cup ASSY
13 Strainer
14 Tank
15 Belt cover
16 Bolt
17 Bracket
18 Nut

Tightening torque: N·m (kg-m, ft-lb)
T1: 42 – 62 (4.3 – 6.3, 31 – 46)
T2: 18 – 23 (1.8 – 2.3, 13 – 17)
T3: 20 – 24 (2.0 – 2.4, 14 – 17)

B4-931

Fig. 17

5. Power Steering Oil Pump

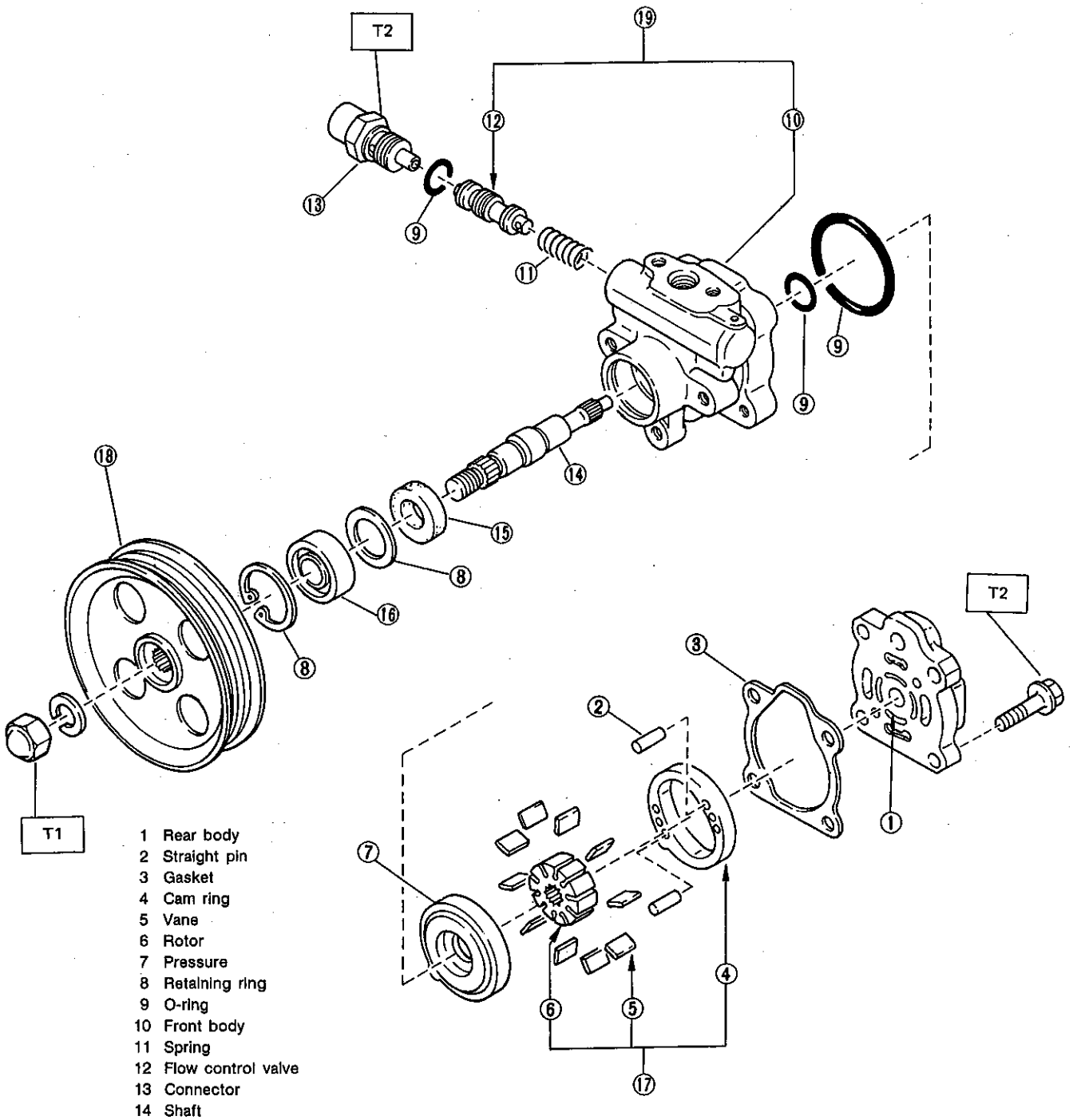

1 Rear body
2 Straight pin
3 Gasket
4 Cam ring
5 Vane
6 Rotor
7 Pressure
8 Retaining ring
9 O-ring
10 Front body
11 Spring
12 Flow control valve
13 Connector
14 Shaft
15 Oil seal
16 Ball bearing
17 Cartridge
18 Pulley
19 Front body & Valve ASSY

Tightening torque: N·m (kg-m, ft-lb)
T1: 42 — 62 (4.3 — 6.3, 31 — 46)
T2: 29 — 39 (3.0 — 4.0, 22 — 29)

B4-1550

Fig. 18

W SERVICE PROCEDURE

1. Steering Column (Rigid)

A: REMOVAL

1) Disconnect battery minus terminal.
2) Loosen front wheel nuts.
3) Lift vehicle and remove front wheels.
4) Remove universal joint bolts and then remove universal joint.

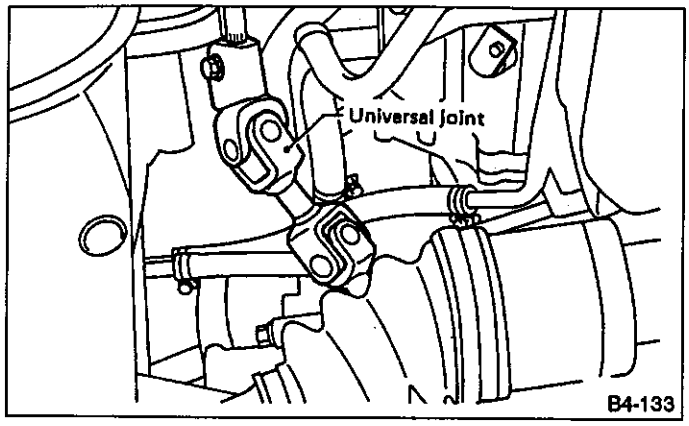

Fig. 19

5) Remove trim panel under instrument panel.
6) Disconnect connectors for ignition switch and combination switch wiring harness under instrument panel.
7) Remove the two bolts under instrument panel securing steering shaft.

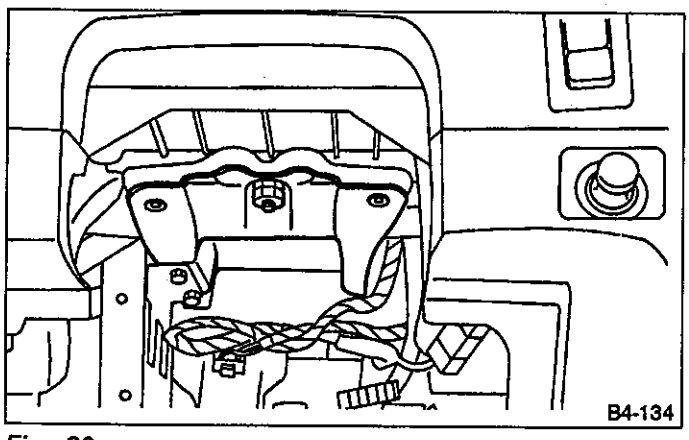

Fig. 20

8) Pull out steering shaft ASSY from hole on toe board.

Be sure to remove universal joint before removing steering shaft ASSY installing bolts when removing steering shaft ASSY or when lowering it for servicing of other parts.

B: DISASSEMBLY

1) Remove horn pad ASSY and horn connector.

2-spoke steering wheel

Remove lower screw and slide horn pad ASSY forward, then disconnect connector.

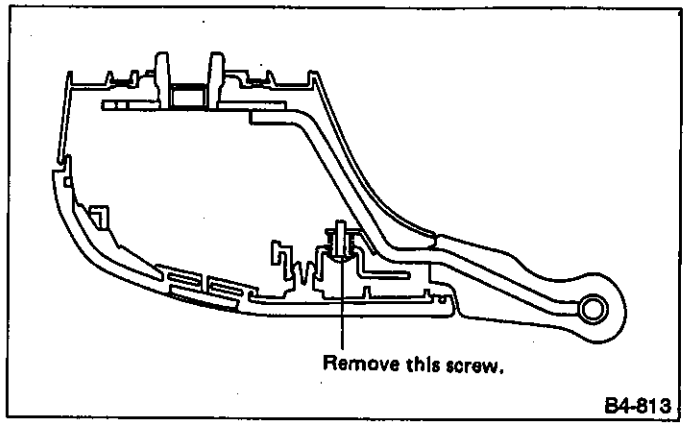

Fig. 21

2) Remove steering wheel nut, then draw out steering wheel from shaft using steering puller.

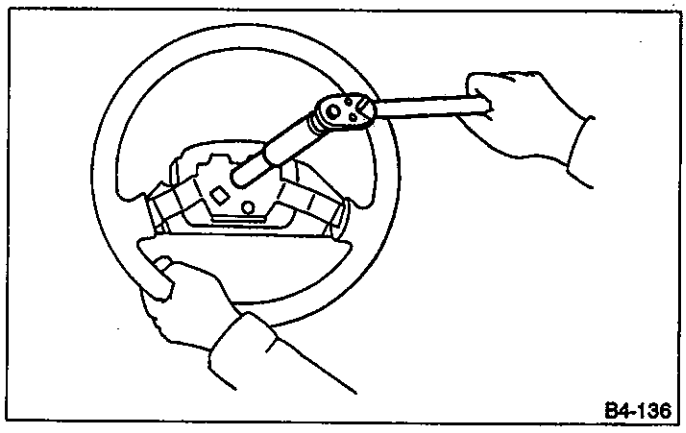

Fig. 22

3) Remove the four screws securing upper and lower steering column covers, and the two screws securing combination switch, then remove related parts.

C: INSPECTION

1. UNIVERSAL JOINT

1) Check looseness along the axis and the rotation.

Looseness:
0 mm (0 in)

2) Check yawing torque

Maximum yawing torque:
0.6 N•m (0.06 kg-m, 0.4 ft-lb)

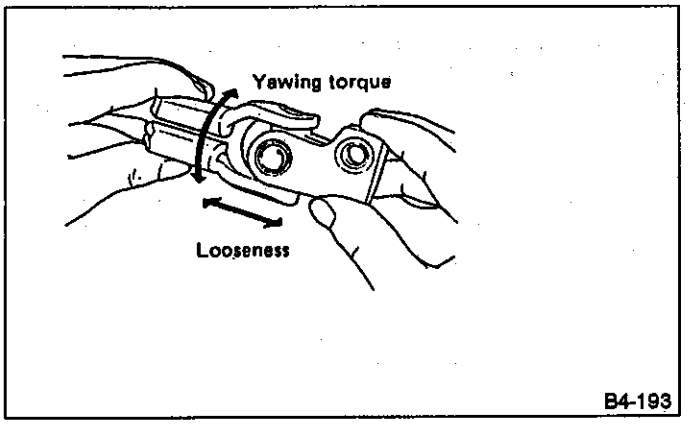

Fig. 23

3) Check seal ring for damage or the serrations for wear.
Replace, if defective.

D: ASSEMBLY

1) Install combination switch and upper and lower column covers to column.
Install coating plate to column-to-body mounting portion.

Fit coating plate securely in position by utilizing the notch provided in column.

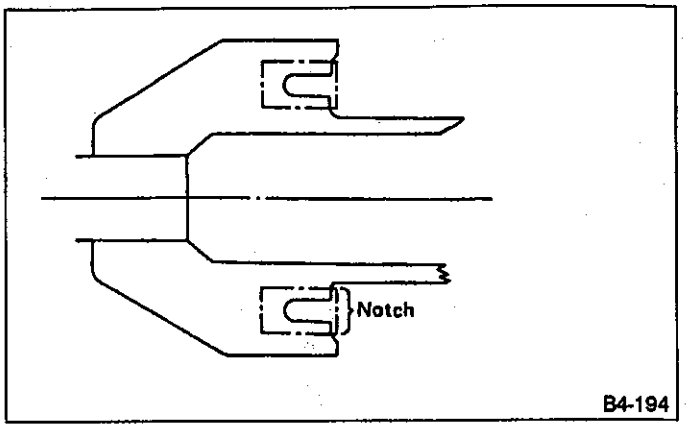

Fig. 24

2) Install steering wheel to steering shaft.

Tightening torque:
29 — 39 N•m (3 — 4 kg-m, 22 — 29 ft-lb)
Column cover-to-steering wheel clearance:
2 — 4 mm (0.08 — 0.16 in)

3) Connect horn connector.
4) Install horn pad ASSY to steering wheel.
   (1) Connect harness connector of pad ASSY to connector of slip right unit.
   (2) Insert pad ASSY from the top and attach hooks to it.
   (3) Secure pad ASSY to steering wheel ASSY with screws.

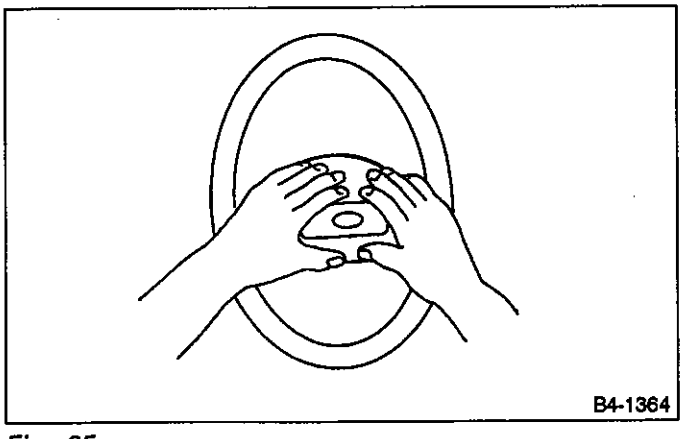

Fig. 25

E: INSTALLATION

1) Insert end of steering shaft ASSY into toeboard grommet.
2) Tighten shaft ASSY mounting bolts under instrument panel.

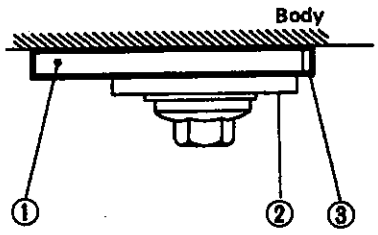

Fig. 26

Tightening torque:
20 — 29 N•m (2.0 — 3.0 kg-m, 14 — 22 ft-lb)

3) Connect ignition and combination switch connectors under instrument panel.

4) Install universal joint.
(1) Push the long yoke of the joint ASSY, all the way into the serrated portion of the shaft ASSY, setting the bolt hole in the cutout.
(2) Then pull the short yoke all the way out of the serrated portion of the gear box ASSY setting the bolt hole in the cutout.
(3) Insert the bolt through the short yoke, pull the joint ASSY and confirm that the bolt is in cutout of the gearbox ASSY.
(4) Fasten the short yoke side with a spring washer and bolt, then fasten the long yoke side.

Tightening torque:
21 — 26 N•m (2.1 — 2.7 kg-m, 15 — 20 ft-lb)

a. Make sure that universal joint bolts is tightened through notch in shaft serration.
b. Excessively large tightening torque of universal joint bolts may lead to heavy steering wheel operation.

Standard clearance between torque rod to DOJ:
Manual transmission model
Over 15 mm (0.59 in)
Automatic transmission model
Over 15 mm (0.59 in)

2. Tilt Steering Column

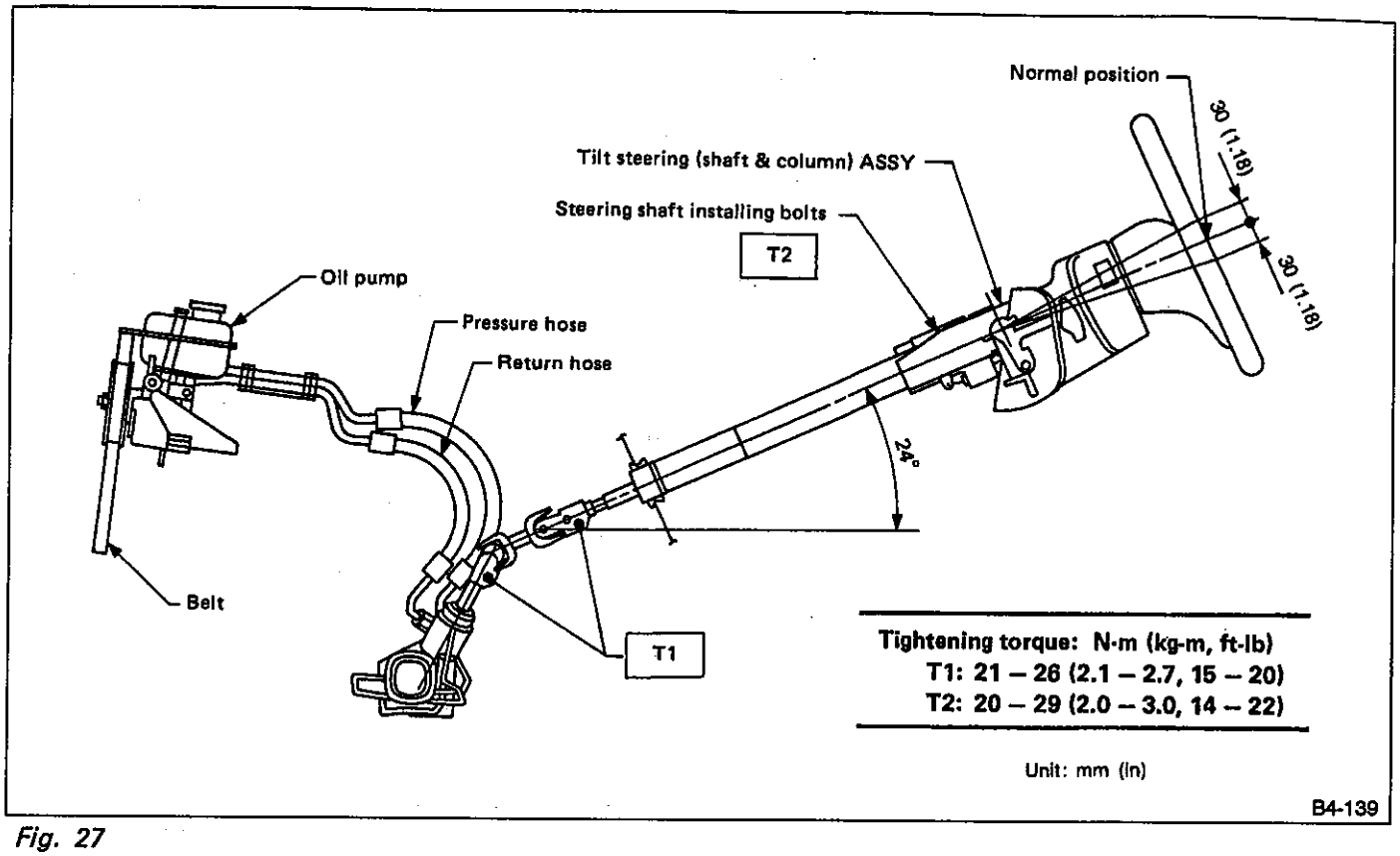

Fig. 27

A: REMOVAL

Removal and installation of shaft ASSY and steering wheel and removal of column cover are the same as those for "Steering Shaft Assembly (Rigid)".

B: DISASSEMBLY

1) Remove lower screw and slide horn pad ASSY forward, then disconnect connector.
Remove in the numerical sequence of 1 , 2 and 3 .

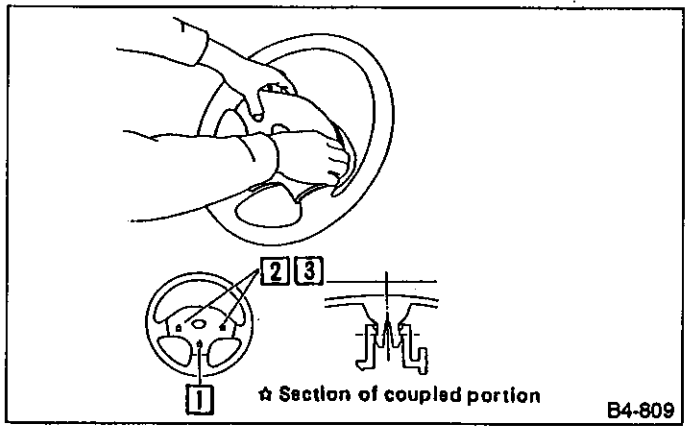

Fig. 28

2) Remove steering wheel nut, then draw out wheel from shaft using steering puller.
3) Remove the four screws securing upper and lower steering column covers, and two screws securing combination switch, then remove related parts.

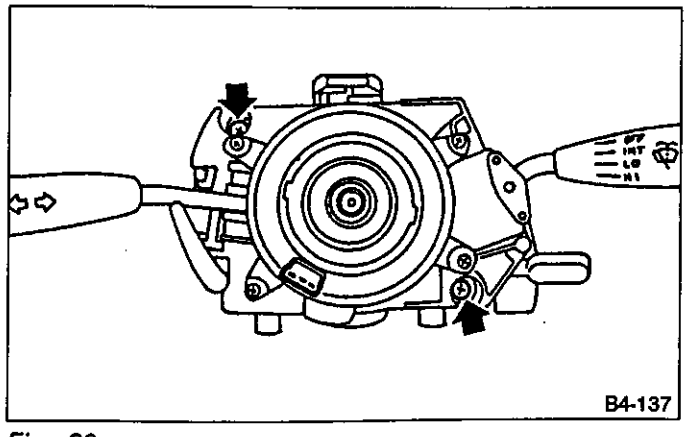

Fig. 29

C: INSPECTION

Clean the disassembled parts with a cloth, and check for wear, damage, or any other faults. If necessary, repair or replace faulty parts.

Part name	Inspection	Corrective action
Universal joint ASSY	• Free play • Swinging torque Yawing torque Looseness 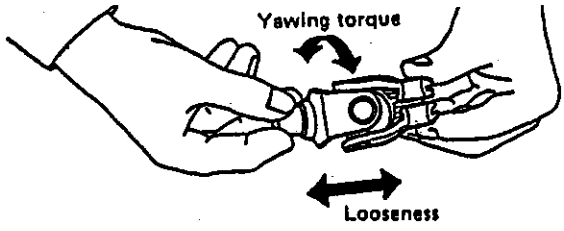 B4-196A *Fig. 30* **Standard value of universal joint free play : 0 mm (0 in)** **Max. value of universal joint swinging torque : 0.3 N·m (0.03 kg-m, 0.2 ft-lb)**	Replace if faulty.
Steering column	• Overall length of steering column Measure overall length of steering column. Standard overall length of steering column: 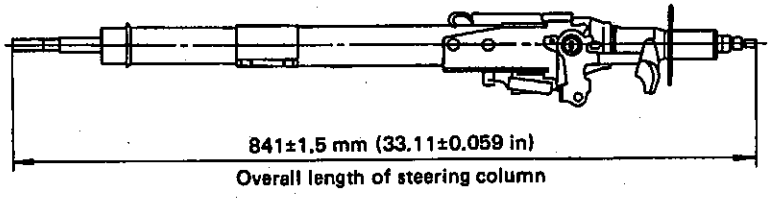 B4-1518 *Fig. 31*	Replace steering column ASSY.

D: ASSEMBLY

1) Insert combination switch to upper column ASSY shaft, and install lower column cover with tilt lever held in the lowered position. Then route ignition key harness and combination switch harness between column cover mounting bosses.
2) Fit upper column cover to lower column cover, and tighten combination switch and column cover.

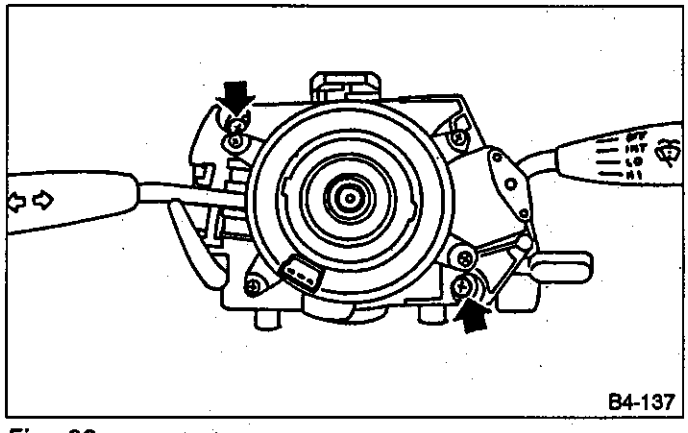

Fig. 32

Tightening torque:
1.0 — 1.4 N•m (0.10 — 0.14 kg-m, 0.7 — 1.0 ft-lb)

Don't overtorque screw.

3) Install coating plate to column-to-body mounting portion.

Fit coating plate securely in position by utilizing the notch provided in column.

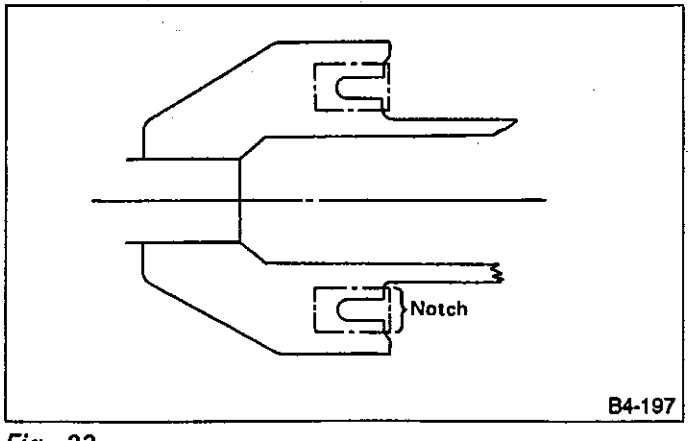

Fig. 33

4) Install pad ASSY to steering wheel.
   (1) Connect harness connector of pad ASSY to connector of slip ring unit.
   (2) Insert pad ASSY from the top and attach hooks to it.
   (3) Secure pad ASSY to steering wheel ASSY with screws.
5) Install steering column ASSY on vehicle body.

Tightening torque:
20 — 29 N•m (2 — 3 kg-m, 14 — 22 ft-lb)

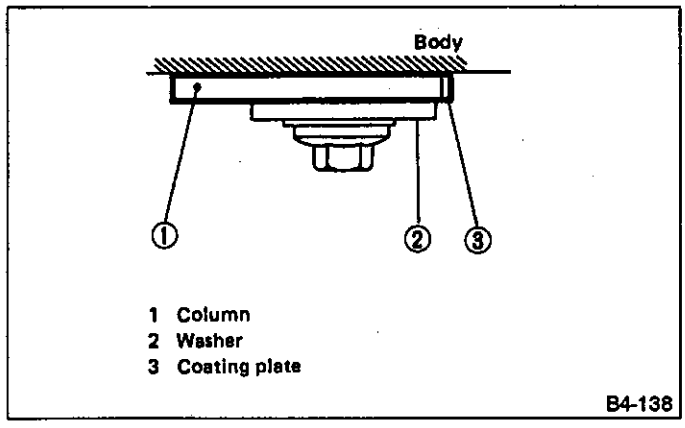

Fig. 34

Ensure that the left side of the column is tightened together with the ground terminal and that coating plates are not dislocated.

3. Steering Gearbox (Power Steering System)

For disassembly and assembly of gearbox unit, refer to section Control Valve (Power Steering Gearbox).

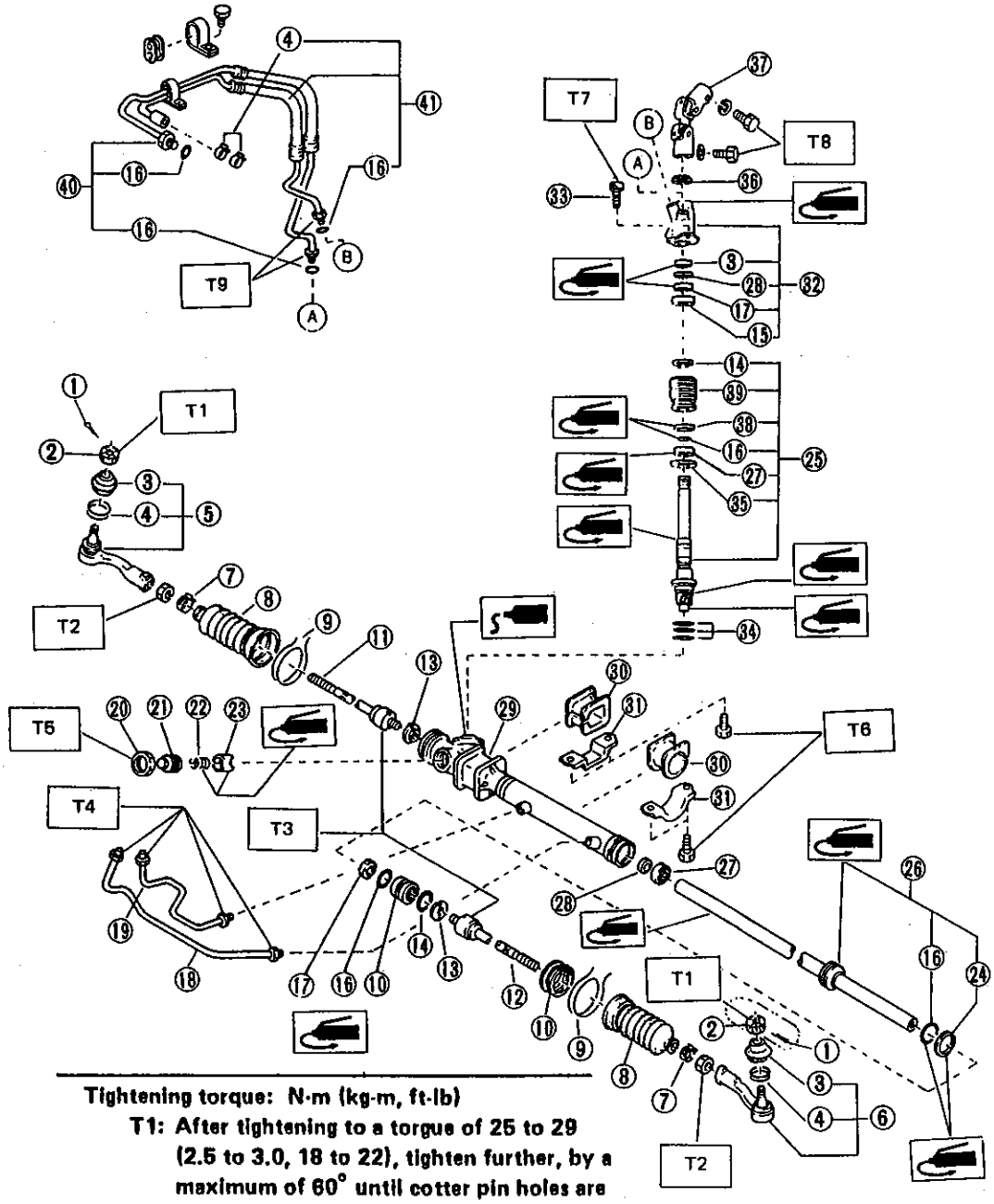

1 Cotter pin
2 Castle nut
3 Dust seal
4 Clip
5 Tie-rod end ASSY (RH)
6 Tie-rod end ASSY (LH)
7 Clip
8 Boot
9 Wire
10 Holder
11 Tie-rod CP RH
12 Tie-rod CP LH
13 Lock washer
14 Retaining ring
15 Ball bearing
16 O-ring
17 Y-packing
18 Pipe A
19 Pipe B
20 Lock nut
21 Adjusting screw
22 Spring
23 Sleeve
24 Oil seal
25 Valve ASSY
26 Rack ASSY
27 Oil seal
28 Back-up washer
29 Housing ASSY
30 Adapter
31 Clamp
32 Valve housing ASSY
33 Socket bolt
34 Shim
35 Spacer
36 Dust cover
37 Universal joint ASSY
38 Seal ring
39 Sleeve ASSY
40 Hose A
41 Hose B

Tightening torque: N·m (kg-m, ft-lb)

T1: After tightening to a torque of 25 to 29 (2.5 to 3.0, 18 to 22), tighten further, by a maximum of 60° until cotter pin holes are aligned.
T2: 78 – 88 (8.0 – 9.0, 58 – 65)
T3: 69 – 88 (7.0 – 9.0, 51 – 65)
T4: 16 – 24 (1.6 – 2.4, 12 – 17)
T5: 29 – 49 (3.0 – 5.0, 22 – 36)
T6: 47 – 71 (4.8 – 7.2, 35 – 52)
T7: 20 – 29 (2.0 – 3.0, 14 – 22)
T8: 21 – 26 (2.1 – 2.7, 15 – 20)
T9: 10 – 20 (1.0 – 2.0, 7 – 14)

Fig. 35

A: REMOVAL

1) Disconnect battery minus terminal.
2) Disconnect both O_2 sensor and exhaust gas temperature warning sensor connectors from front exhaust pipe ASSY.
3) Raise vehicle with a jack and remove front wheel.
4) Disconnect front exhaust pipe ASSY.
5) Remove cotter pin and castle nut. Using a puller, remove tie-rod end from knuckle arm.

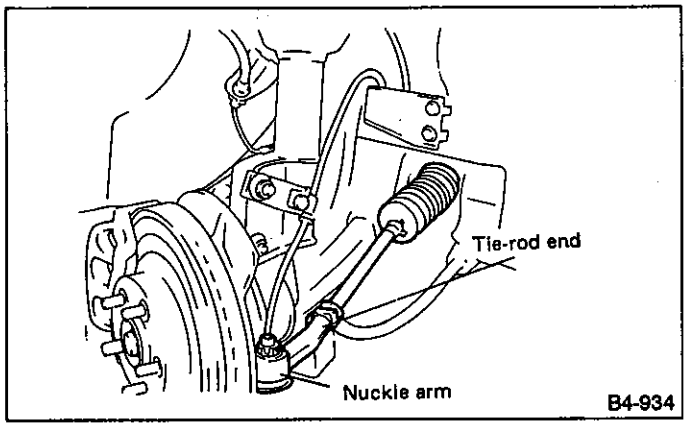

Fig. 36

6) Remove jack-up plate and stabilizer.

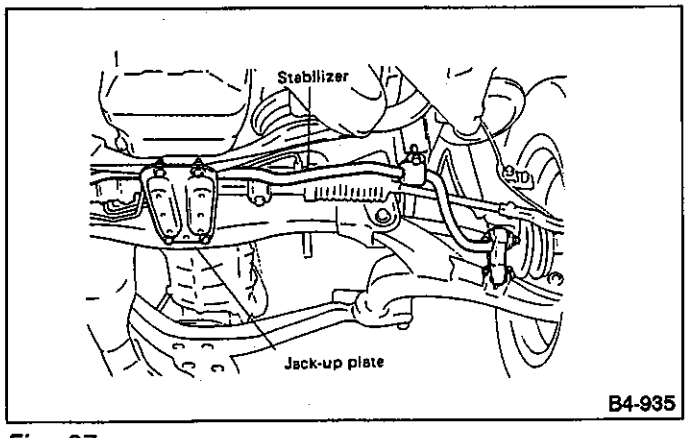

Fig. 37

7) Disconnect one pipe joint A from center of gearbox ASSY, and connect a vinyl hose to it. While turning steering wheel to the left and right, drain fluid through the hose. Similarly, drain fluid from the other pipe joint B.

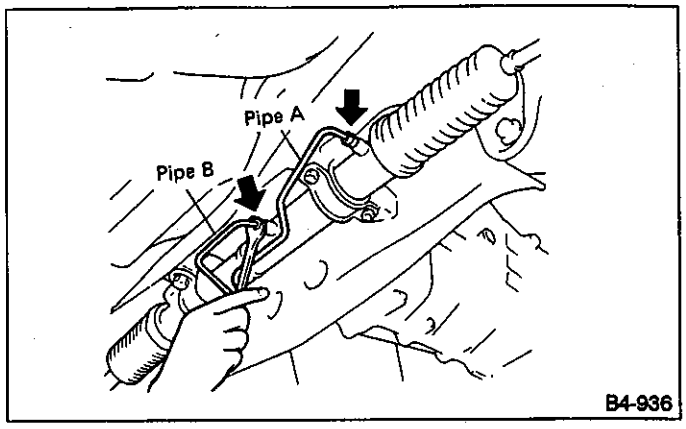

Fig. 38

8) Remove lower and upper bolts from universal joint ASSY, and remove universal joint in the upward direction.

Scribe alignment marks on universal joint ASSY so that it can be reassembled at the original serration.

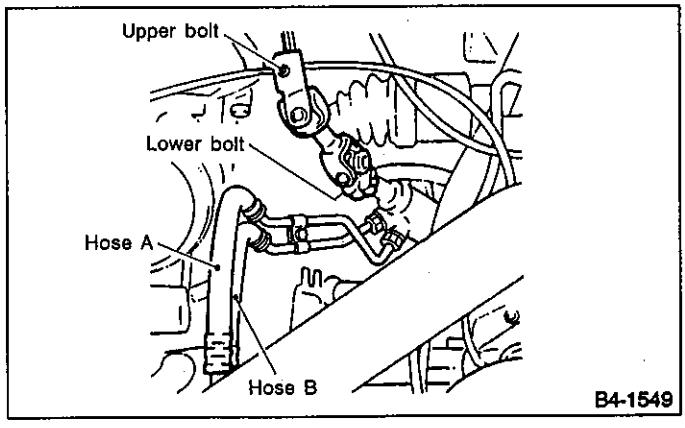

Fig. 39

9) Remove flare nuts from control valve of gearbox ASSY, and disconnect upper and lower hoses B and A.

- **Always disconnect hoses B and A in that order.**
- **Be careful not to damage the hoses during removal.**

10) Remove bolts securing gearbox to crossmember, and detach gearbox.

Tightening torque:
47 — 71 N•m (4.8 — 7.2 kg-m, 35 — 52 ft-lb)

B: DISASSEMBLY

1) Disconnect four pipes from gearbox.
2) Secure gearbox removed from vehicle in vice using STAND (926200000).

Secure the gearbox ASSY in a vice using the special tool as shown. Do not attempt to secure it without this special tool.

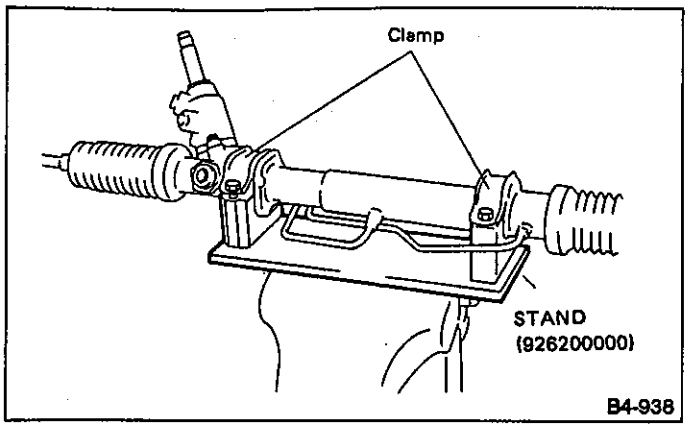

Fig. 40

3) Pry off clip from outer end of boot, and slide boot toward tie-rod end.

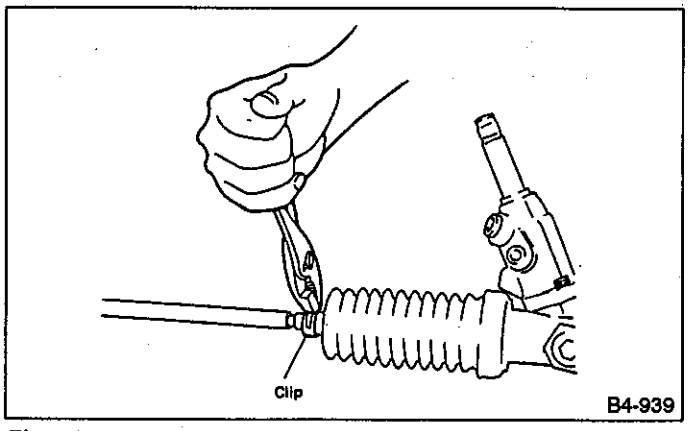

Fig. 41

4) Using WRENCH, remove lock wire from inner end of boot, and remove boot.

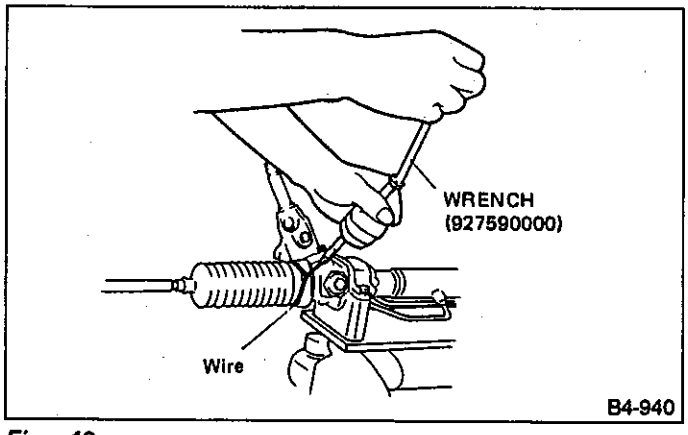

Fig. 42

5) Extend rack approximately 40 mm (1.57 in) out. Unlock lock wire at lock washer on each side of tie-rod end using a standard screwdriver.

Be careful not to scratch rack surface as oil leaks may result.

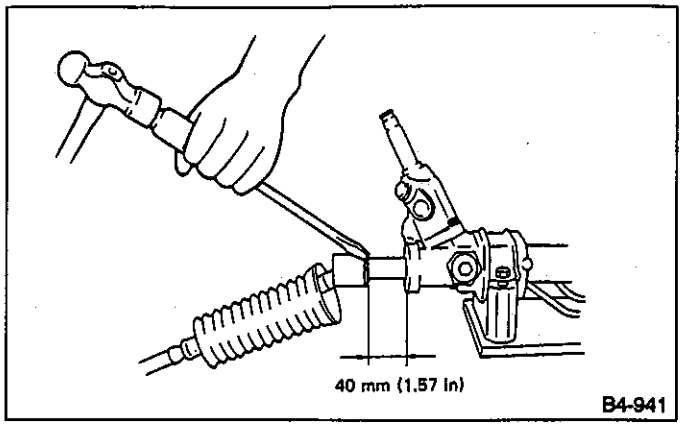

Fig. 43

6) Using SPANNER, loosen lock nut. Tighten adjusting screw until it no longer tightens.

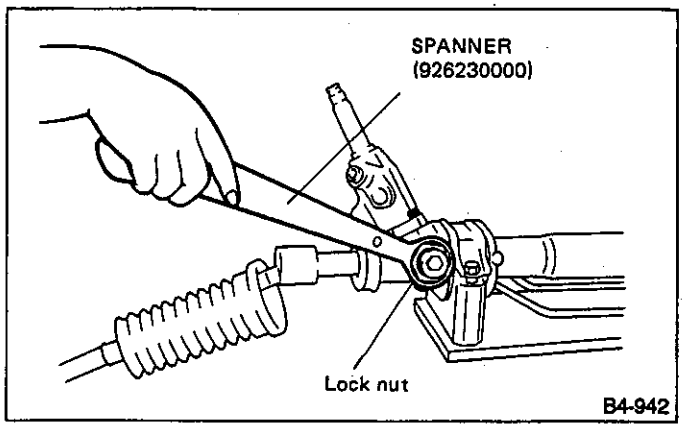

Fig. 44

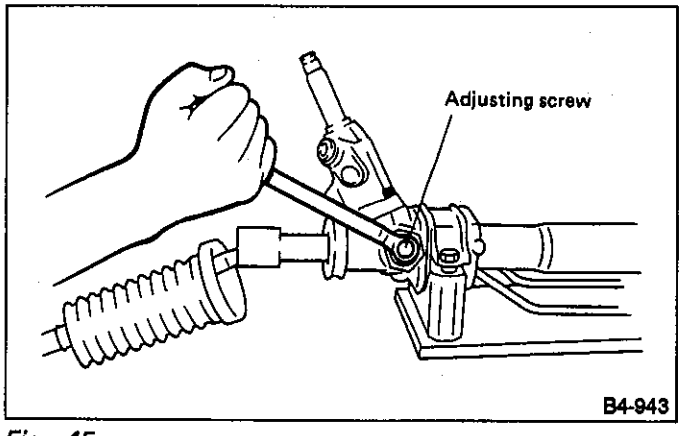

Fig. 45

7) Using a wrench (32 mm width across flats) or adjustable wrench, remove tie-rod CP.

- **Check ball joint for free play, and tie-rod for bends; replace if necessary.**
- **Check dust seals used with tie-rod end ball joint for damage or deterioration. Replace if necessary.**

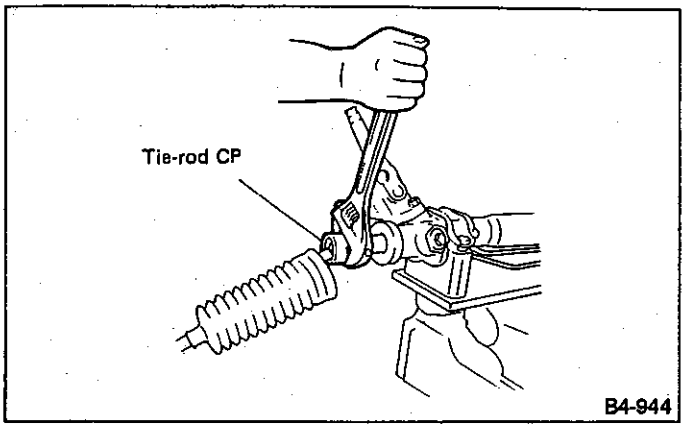

Fig. 46

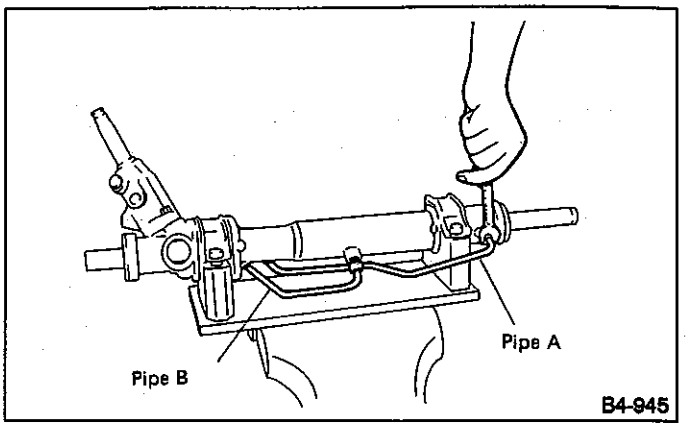

Fig. 47

8) Loosen adjusting screw and remove spring and sleeve.

Replace spring and/or sleeve if damaged.

9) Disconnect pipes A and B from steering body and control valve housing.

Replace pipes and/or flare nuts if damaged.

C: INSPECTION

1) Clean all disassembled parts, and check for wear, damage, or any other faults, then repair or replace as necessary.

2) When disassembling, check inside of gearbox for water. If any water is found, carefully check boot for damage, input shaft dust seal, adjusting screw and boot clips for poor sealing. If faulty, replace with new parts.

No.	Parts	Inspection	Corrective action
1	Input shaft	(1) Bend of input shaft (2) Damage on serration	If bend or damage is excessive, replace entire gearbox ASSY.
2	Dust seal	(1) Crack or damage (2) Wear	If outer wall slips, lip is worn out or damage is found, replace it with new one.
3	Rack and pinion	Poor mating of rack with pinion	(1) Adjust backlash properly. By measuring turning torque of gearbox and sliding resistance of rack, check if rack and pinion engage uniformly and smoothly with each other. (Refer to "Service limit".) (2) Keeping rack pulled out all the way so that all teeth emerge, check teeth for damage. Even if abnormality is found in either (1) or (2), replace entire gearbox ASSY.
4	Gearbox unit	(1) Bend of rack shaft (2) Bend of cylinder portion (3) Crack or damage on cast iron portion	Replace gearbox ASSY with new one.
		(4) Wear or damage on rack bush	If free play of rack shaft in radial direction is out of the specified range, replace gearbox ASSY with new one. (Refer to "Service limit".)
		(5) Wear on input shaft bearing	If free plays of input shaft in radial and axial directions are out of the specified ranges, replace gearbox ASSY with new one. (Refer to "Service limit".)
5	Boot	Crack, damage or deterioration	Replace.
6	Tie-rod CP	(1) Looseness of ball joint (2) Bend of tie-rod	Replace.
7	Tie-rod end	Damage or deterioration on dust seal	Replace.
8	Adjusting screw spring	Deterioration	Replace.
9	Boot clip	Deterioration	Replace.
10	Sleeve	Damage	Replace.
11	Pipes	(1) Damage to flared surface (2) Damage to flare nut (3) Damage to pipe	Replace.

1. SERVICE LIMIT

Make a measurement as follows. If it exceeds the specified service limit, adjust or replace.

When making a measurement, vise gearbox by using special tool (STAND: 926200000). Never vise gearbox by inserting aluminum plates, etc. between vise and gearbox.

Sliding resistance of rack shaft

Service limit:
304 N (31 kg, 68 lb) or less
Difference between left and right sliding resistance:
Less than 20%

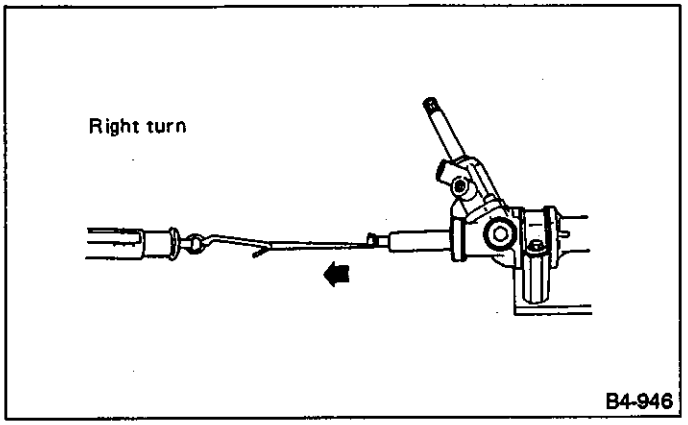

Fig. 48 Right-turn steering

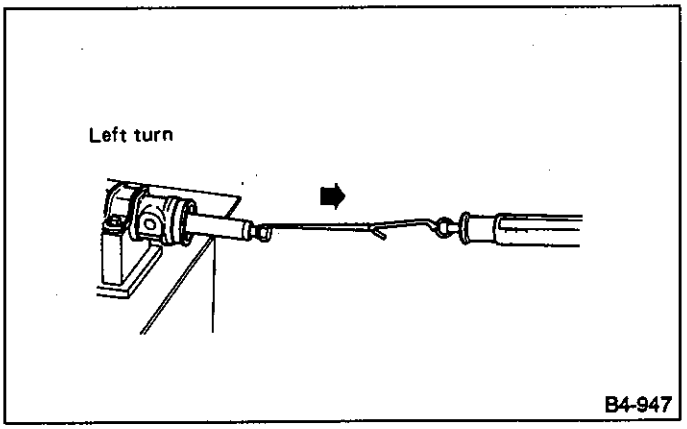

Fig. 49 Left-turn steering

2. RACK SHAFT PLAY IN RADIAL DIRECTION

- **Right-turn steering**

Service limit:
Less than 0.4 mm (0.016 in) (direction ⬅ ➡)
Less than 0.6 mm (0.024 in) (direction ⇦ ⇨)

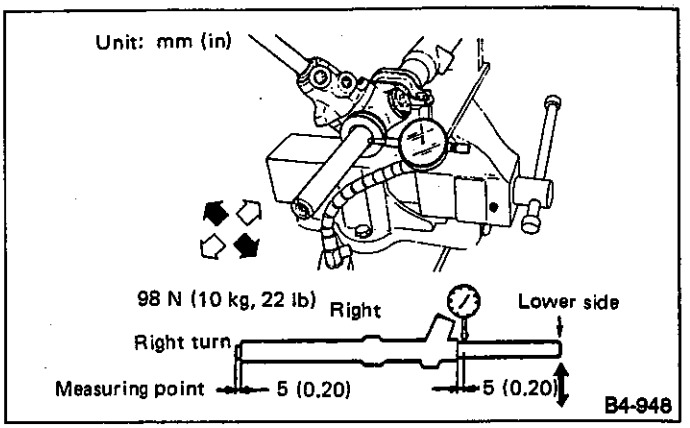

Fig. 50

- **Left-turn steering**

Service limit:
Less than 0.4 mm (0.016 in) (direction ⬅ ➡ and ⇦ ⇨)

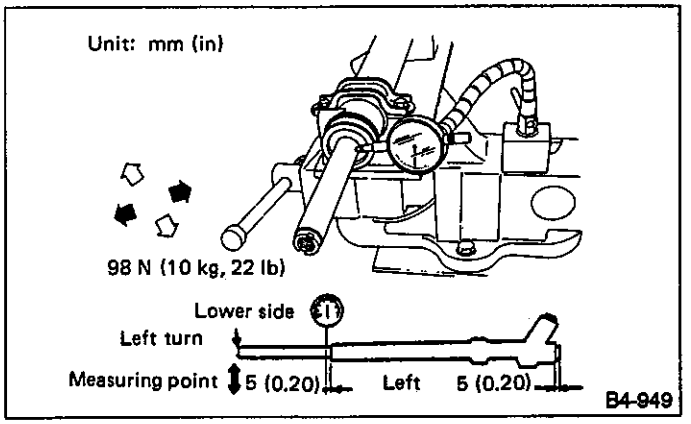

Fig. 51

3. INPUT SHAFT PLAY

- **In radial direction**

Service limit:
0.18 mm (0.0071 in) or less

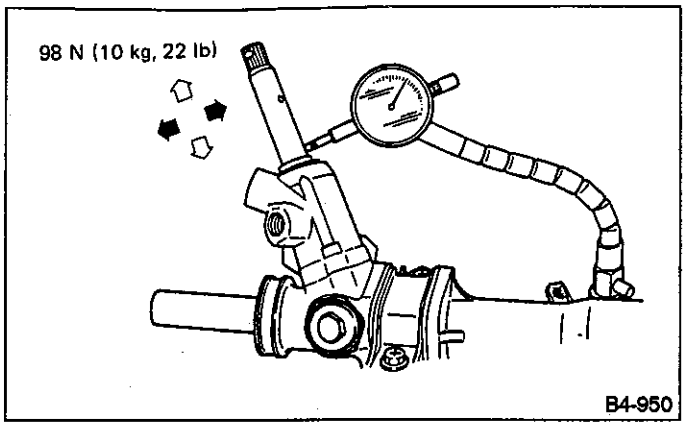

Fig. 52

- **In axial direction**

Service limit:
0.27 mm (0.0106 in) or less

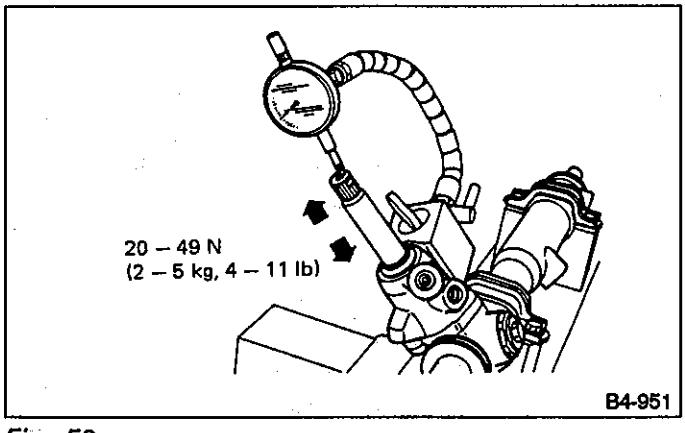

Fig. 53

4. TURNING RESISTANCE OF GEARBOX

Service limit:
Straight-ahead position within 30 mm (1.18 in) from rack center
Less than 11.18 N (1.14 kg, 2.51 lb)
Maximum allowable resistance
15.79 N (1.61 kg, 3.55 lb) or less
Difference between left and right sliding resistance:
Less than 20%

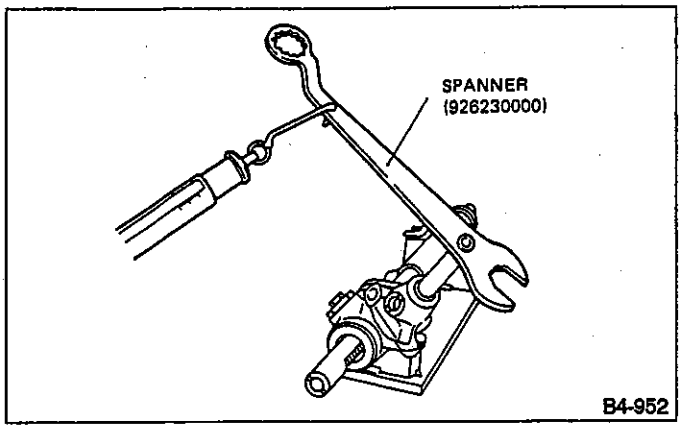

Fig. 54

D: ASSEMBLY

Use only SUBARU genuine grease for gearbox.

Specified grease for gearbox
VALIANT GREASE M2 [Parts No. 003608001, net 0.5 kg (1.1 lb)]

- Clean all parts and tools before reassembling.

1) Move rack shaft fully to the left and right two or three times to lubricate shaft ends with grease. Remove excess grease, being careful not to block air vent hole.

- **When rack is fully moved to its stroke ends with tie-rod removed, be careful not to bump rack ends.**
- **Ensure that screw located at end of rack shaft is free from grease.**

2) Apply grease to bore wall which accommodates sleeve.

Ensure that hands are clean when applying grease.

3) Apply a coat of grease to sliding surface of sleeve and seating surface of spring, and insert sleeve into steering body ASSY. Charge adjusting screw with grease, insert spring into adjusting screw and install on steering body ASSY.

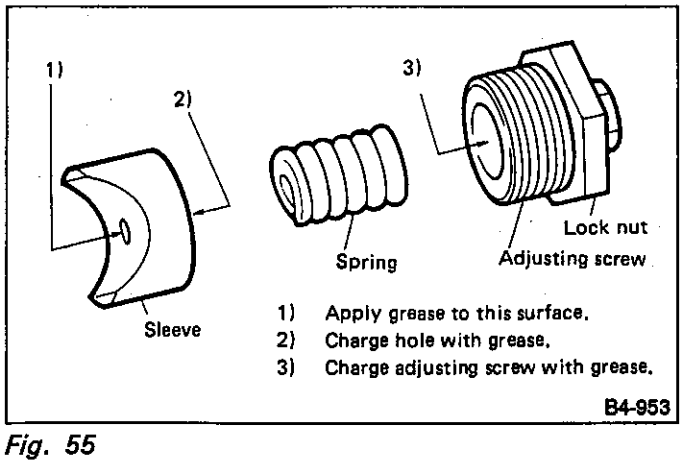

Fig. 55

4) Installation of tie-rod CP

(1) Rotate input shaft until rack extends approximately 40 mm (1.57 in).
(2) Tighten adjusting screw until it will no longer tighten.
(3) Install lock washers and tighten left and right tie-rod CPs into rack ends.

Tightening torque:
69 — 88 N•m (7.0 — 9.0 kg-m, 51 — 65 ft-lb)

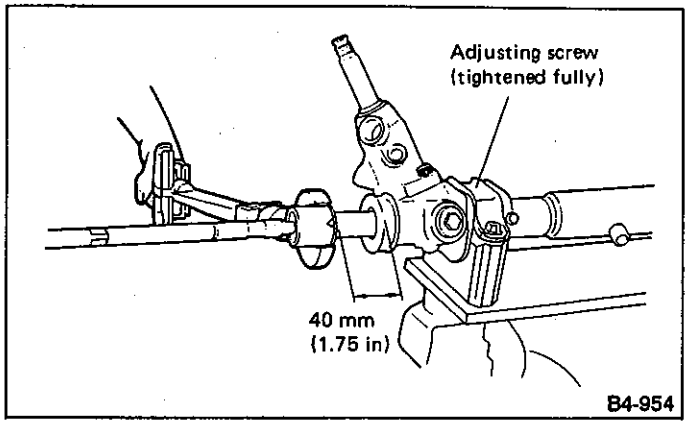

Fig. 56

The left and right tie-rod CP differ as indicated in the table below.

Right tie-rod (pinion side)	No air vent hole provided	Grooved (for identification)
Left tie-rod (cylinder side)	Air vent hole provided	Not grooved (for identification)

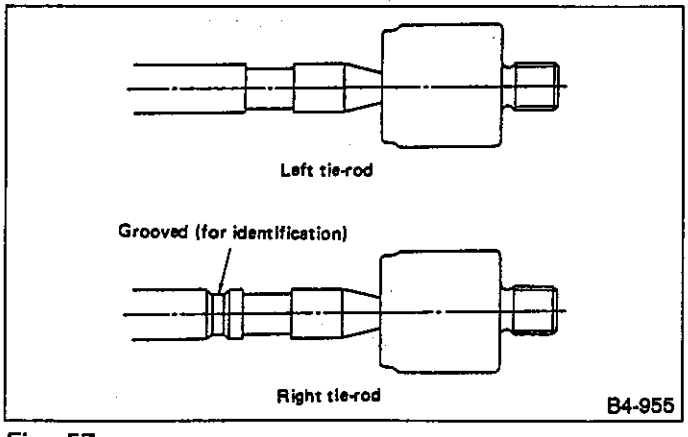

Fig. 57

(4) Using a chisel and hammer, bend lock washers (at two places).

Be careful not to scratch rack.

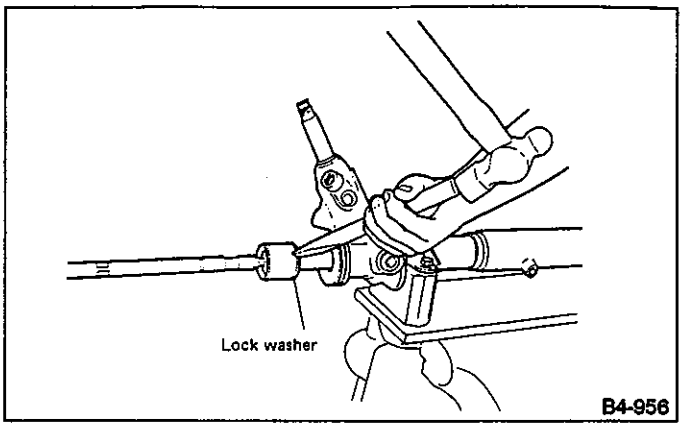

Fig. 58

5) Rack & pinion backlash adjustment

(1) Loosen adjusting plug.
(2) Rotate input shaft so that rack is in the straight ahead direction. [Ensure that distance between rack end and stopper is 72.4 mm (2.850 in).]
(3) Tighten adjusting plug by two threads.

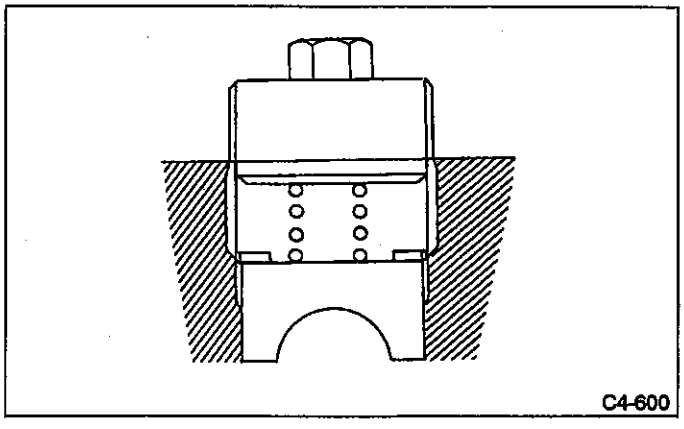

Fig. 59

(4) Turn adjusting screw so that the entire thread area is coated with liquid packing.

a. Apply liquid packing of approximately 1.5 grams (0.053 oz) to adjusting screw thread area.
b. Also turn plug to ensure that its entire contact area is coated with liquid packing.

Liquid packing:
Three-bond 1102 or equivalent

(5) Tighten adjusting plug to 20 N•m (2.0 kg-m, 14 ft-lb) and loosen, then tighten to 5 N•m (0.5 kg-m, 3.6 ft-lb) and loosen, and finally tighten to 5 N•m (0.5 kg-m, 3.6 ft-lb) and loosen 25°.
(6) While holding adjusting plug using a closed wrench, tighten lock nut using LOCK NUT WRENCH.

Tightening torque:
29 — 49 N•m (3 — 5 kg-m, 22 — 36 ft-lb)

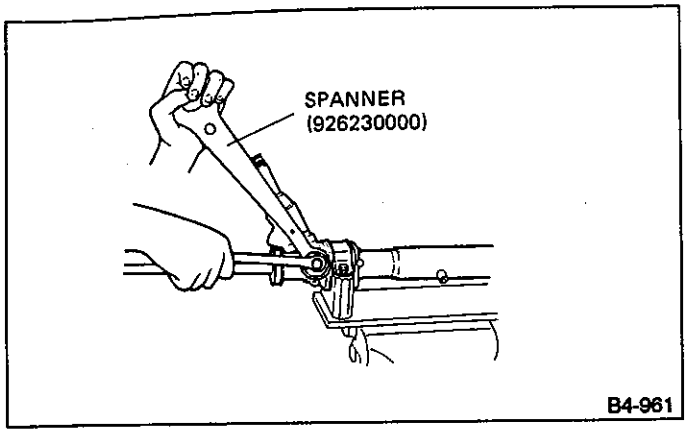

Fig. 60

- **Do not allow liquid packing to come in contact with sleeve.**
- **While rotating input shaft to fully move rack shaft to the left and right, ensure that rack moves smoothly without binding, and that rotating torque is constant.**

6) Installation of boot

(1) Apply a coat of grease to inner wall of boot small end.

(2) Position boot large end in rubber mount groove and gearbox, and small end in groove of tie-rod CP.

- **Ensure that both ends of boot are properly situated in grooves.**
- **Ensure that boot is free from abnormal swelling or dents.**

(3) Attach lock wire to boot large end, and twist it while pulling it upward (with a force of approximately 29 – 49 N (3 – 5 kg, 7 – 11 lb). Then bend wire end along boot as shown.

Ensure that lock wire is not loose.

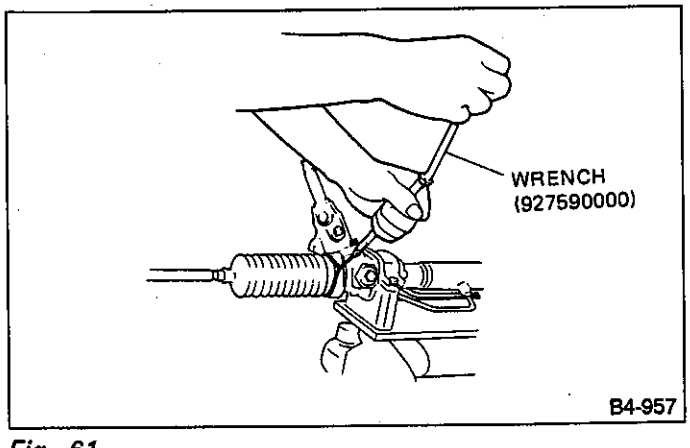

Fig. 61

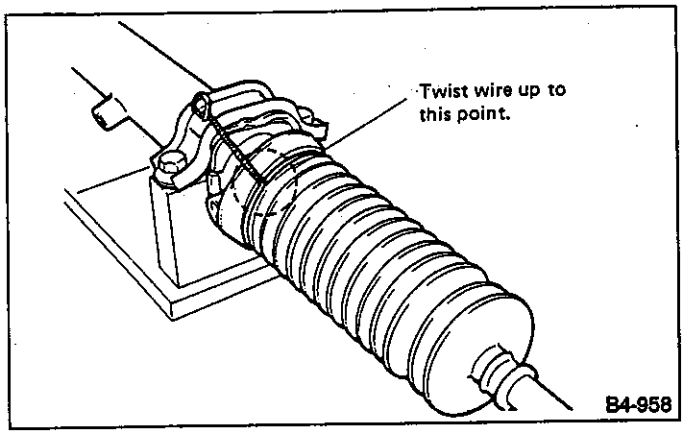

Fig. 62

(4) Bend down flange of boot large end.

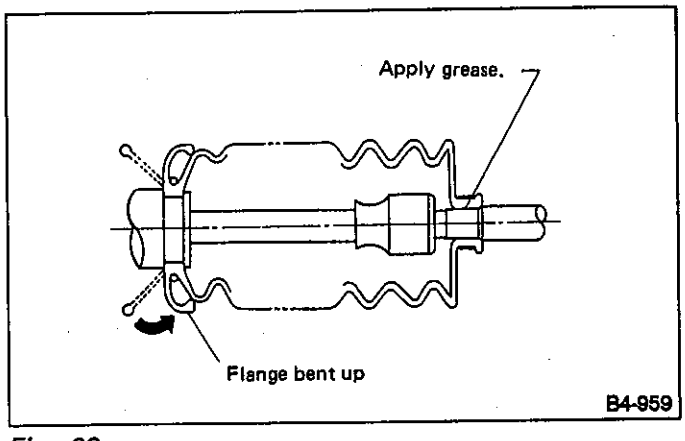

Fig. 63

(5) Install clip using pliers.

After installing clip, ensure that boot's small end is properly positioned in groove on tie-rod CP.

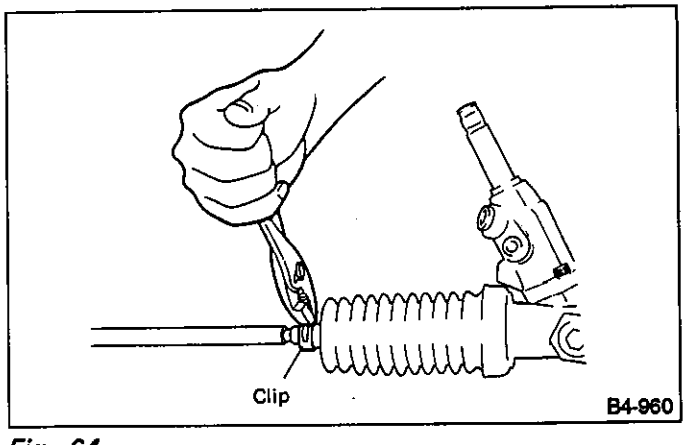

Fig. 64

7) Install pipe ASSYs A and B.

Tightening torque:
16 — 24 N•m (1.6 — 2.4 kg-m, 12 — 17 ft-lb)

E: INSTALLATION

Installation is in the reverse order of removal.
Observe the following:

When adjusting toe-in, hold boot as shown to prevent it from being rotated or twisted. If twisted, straighten it.

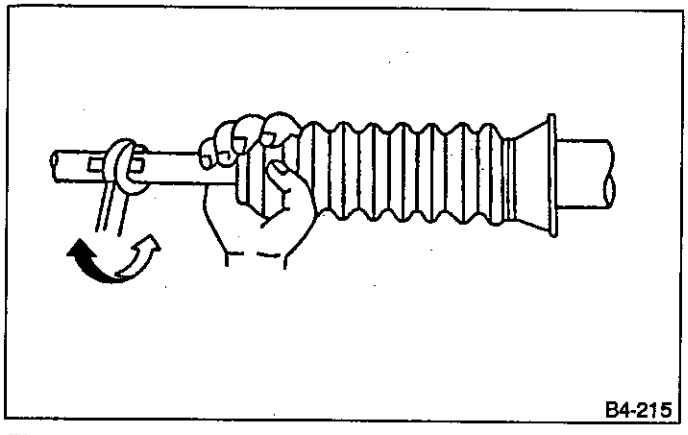

Fig. 65

F: ADJUSTMENT

1) Adjust front toe.

Standard of front toe:
IN 3 — OUT 3 mm (IN 0.12 — OUT 0.12 in)

2) Adjust steering angle of wheels.

Model	Inner wheel	Outer wheel
Non TURBO	$39° {}^{+1'}_{-1.5'}$	$33.5° {}^{+1'}_{-1.5'}$
TURBO	$36.5° {}^{+1'}_{-1.5'}$	$32.0° {}^{+1'}_{-1.5'}$

3) If steering wheel spokes are not horizontal when wheels are set in the straight ahead position, and error is more than 5° on the periphery of steering wheel, correctly re-install the steering wheel.

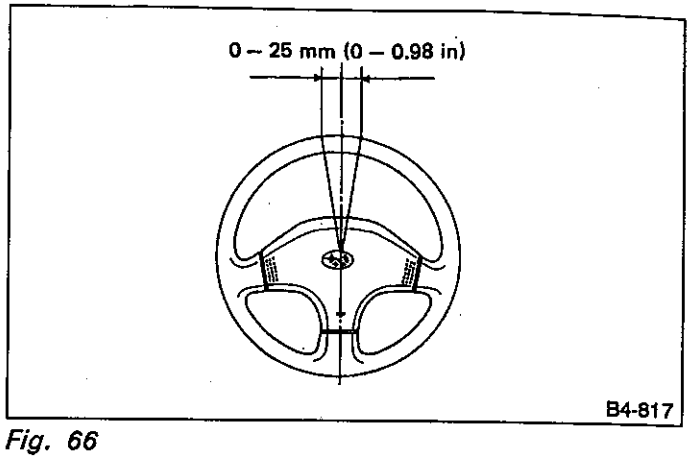

Fig. 66

If steering wheel spokes are not horizontal with vehicle set in the straight ahead position after this adjustment, correct it by turning the right and left tie-rods in the same direction by the same amount.

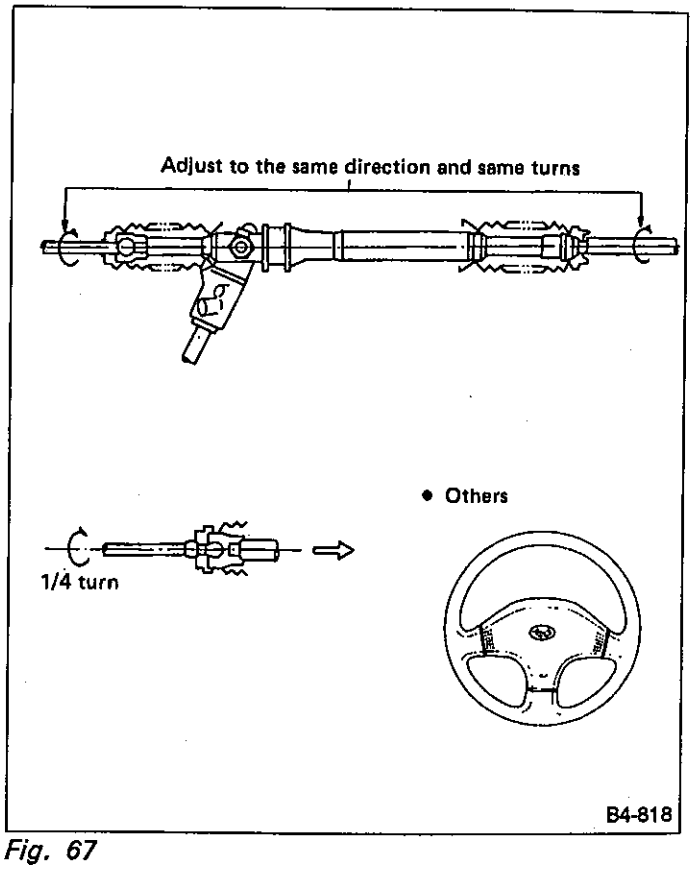

Fig. 67

4. Control Valve (Power Steering Gearbox)

This section focuses on the disassembly and reassembly of control valve. For the inspection and adjustment and the service procedures for associated parts, refer to "Steering Gearbox (Power Steering System)".

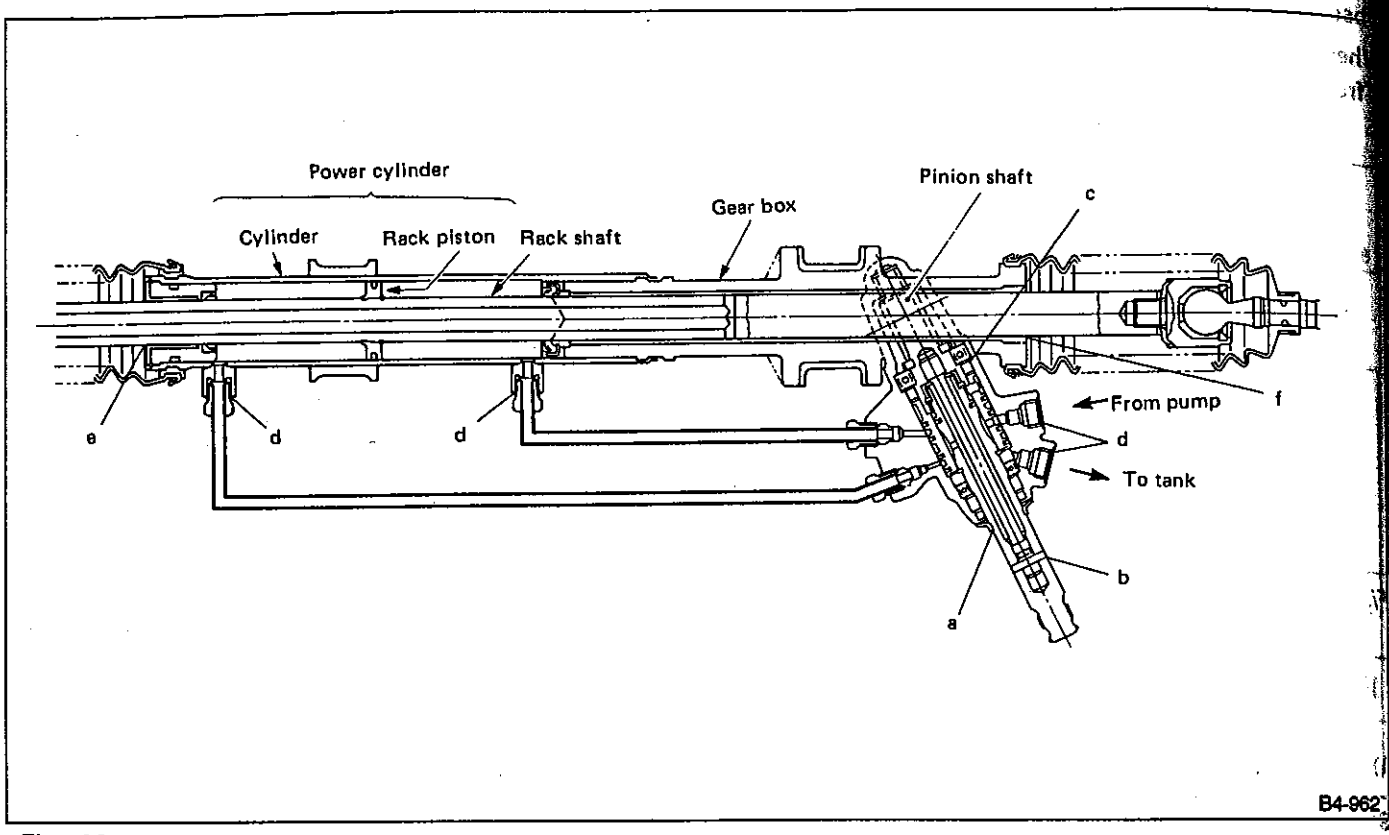

Fig. 68

A: CHECKING OIL LEAKING POINTS

1. OIL LEAKING POINTS

a. If leak point is other than a, b, c, or d, perform check (5) in 2) before dismounting gearbox ASSY from vehicle. If gearbox ASSY is dismounted without confirming where the leak is, it must be mounted again to locate the leak point.

b. Even if the location of the leak can be easily found by observing the leaking condition, it is necessary to thoroughly remove the oil from the suspected portion and turn the steering wheel from lock to lock about 30 to 40 times with engine running, then make comparison of the suspected portion between immediately after and several hours after this operation.

c. Before starting oil leak repair work, be sure to clean the gearbox ASSY, hoses, pipes, and surrounding parts. After completing repair work, clean these areas again.

2. OIL LEAK CHECK PROCEDURE AND REPLACEMENT PARTS

Parts requiring replacement are described in the smallest unit of spare parts including damaged parts and spare parts damaged. In actual disassembly work, accidental damage as well as inevitable damage to some related parts must be taken into account, and spare parts for them must also be prepared. However, it is essential to pinpoint the cause of trouble, and limit the number of replacement parts as much as possible.

1) Leakage from "a"
The oil seal is damaged. Replace valve ASSY with a new one.

2) Leakage from "b"
The torsion bar O-ring is damaged. Replace valve ASSY with a new one.

3) Leakage from "c"
The oil seal is damaged. Replace valve ASSY with a new one.

4) Leakage from "d"
The pipe ASSY is damaged. Replace the faulty pipe ASSY or O-ring.

5) If leak is other than a, b, c, or d, and if oil is leaking from the gearbox ASSY, move the right and left boots

toward tie-rod end side, respectively, with the gearbox ASSY mounted to the vehicle, and remove oil from the surrounding portions. Then, turn the steering wheel from lock to lock 30 to 40 times with the engine running, then make comparison of the leaked portion immediately after and several hours after this operation.

(1) Leakage from "e"
The cylinder seal is damaged. Replace rack bush ASSY with a new one.
(2) Leakage from "f"
There are two possible causes. Take following step first. Remove the pipe ASSY B from the valve housing, and close the circuit with PLUG (926420000). Turn the steering wheel from lock to lock 30 to 40 times with the engine running, then make comparison of the leaked portion between immediately after and several hours after this operation.

a. If leakage from "f" is noted again:
The oil seal of pinion & valve ASSY is damaged. Replace pinion & valve ASSY with a new one. Or replace the oil seal and the parts that are damaged during disassembly with new ones.
b. If oil stops leaking from "f":
The oil seal of rack housing is damaged.
Replace the oil seal and the parts that are damaged during disassembly with new ones.

B: DISASSEMBLY

1) Slide dust cover out.

- **Be careful not to scratch housing or input shaft during dust cover removal. Also do not allow foreign matter to enter housing interior.**
- **Replace dust cover with a new one if its inside bore or lips are worn or damaged.**

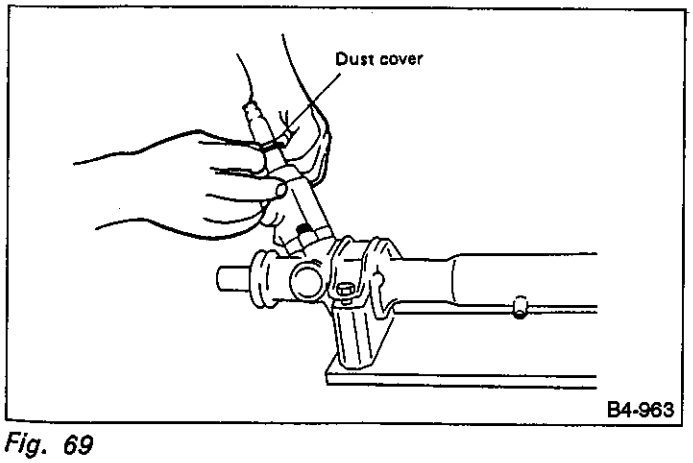

Fig. 69

2) Removal of valve ASSY

(1) Remove the two bolts securing valve housing ASSY.

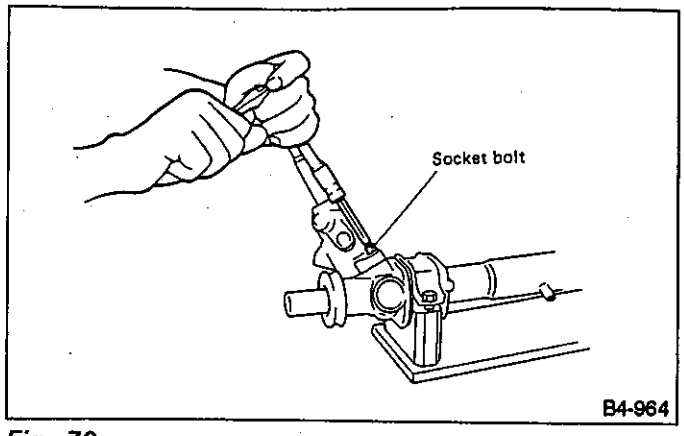

Fig. 70

(2) Remove valve housing ASSY, pinion and valve ASSY as a unit.

Extract input shaft when removing valve ASSY.

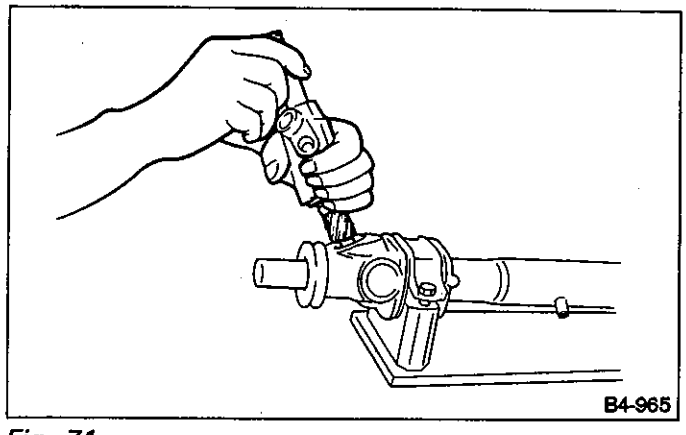

Fig. 71

3) Removal of snap ring from seal holder ASSY
While attaching small screwdriver blade to snap ring via groove on boot (on cylinder side of steering body ASSY), push the snap ring using another screwdriver.

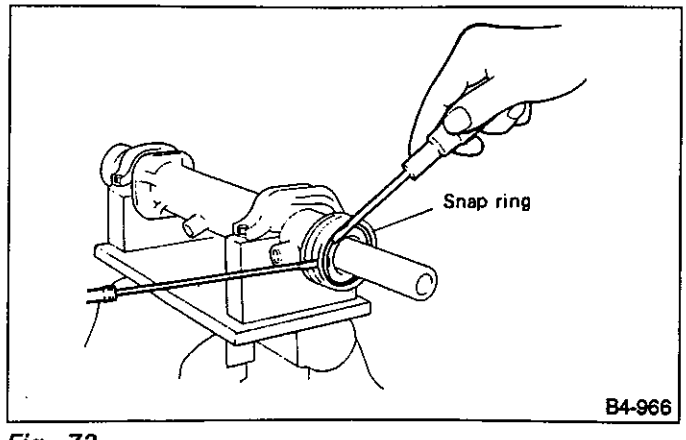

Fig. 72

4) Removal of rack ASSY
Push rack out of steering body ASSY while pushing it on valve side.

- **Block pipe connection of steering body ASSY to prevent fluid from flowing out.**
- **Do not allow rack to come in contact with inner wall of cylinder. Otherwise, cylinder wall may be scratched, resulting in oil leaks.**
- **Remove holder ASSY and rack ASSY as a unit.**
- **Check rack and steering body ASSY for bends or cracks; replace as required.**

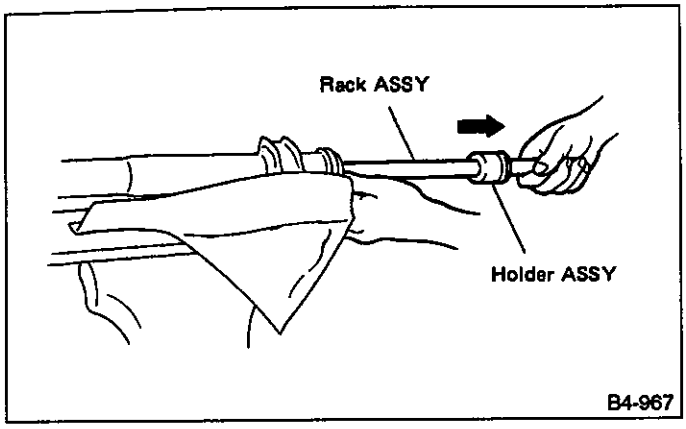

Fig. 73

5) Removal of high-pressure seal

Insert REMOVER from valve side, and lightly tap it using a hammer to drive out back-up ring and oil seal.

Discard back-up ring and oil seal after removal; replace with new ones.

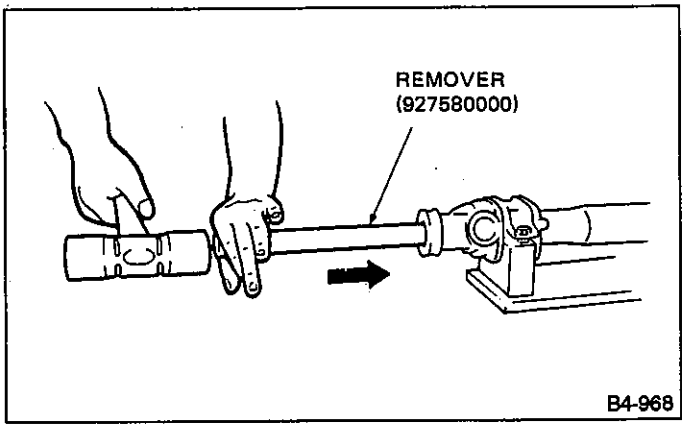

Fig. 74

6) Removal of Y-packing and O-ring

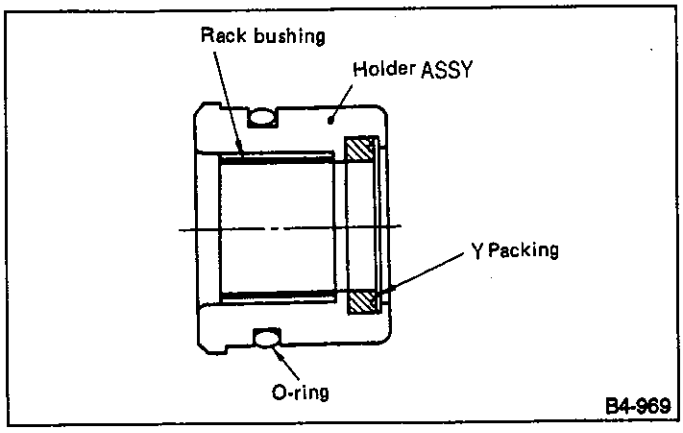

Fig. 75

(1) Using a small rod, pry out Y-packing.

- **Be careful not to scratch Y-packing groove on holder ASSY. A scratch may cause oil leaks.**
- **Be careful not to scratch mating surfaces of holder ASSY and rack. A scratch may cause oil leaks.**
- **Check rack bushing for wear or damage; replace as required.**
- **Discard Y-packing and O-ring after removal; replace with new ones.**

(2) Remove O-ring.

(3) Apply a coat of grease to Y-packing groove in holder ASSY.

(4) Install a new Y-packing and O-ring.

C: REPLACEMENT OF SEAL AND PACKING

1) Disassembly and reassembly of valve ASSY

(1) After removing dust cover, extract pinion & valve ASSY from valve housing.

- **If pinion & valve ASSY is difficult to remove, use a press.**
- **Discard Y-packing after removal; replace with a new one.**
- **Check rotor for bends and serrations for damage; replace as required.**

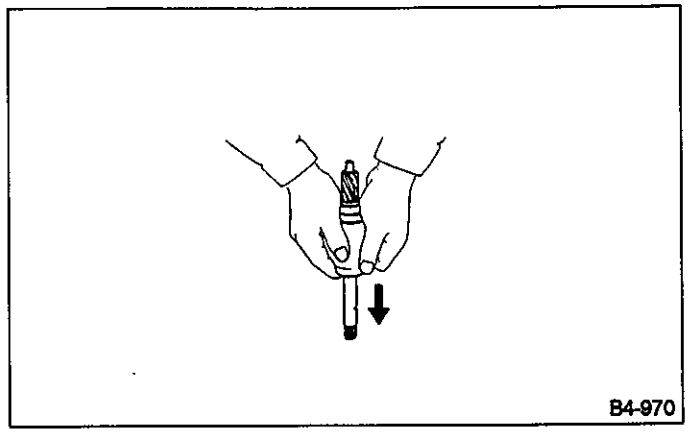

Fig. 76

(2) Using REMOVER and press, remove dust seal, back-up washer, Y-packing and ball bearing from valve housing.

- **Use the "A" end of remover.**
- **Do not apply a force to end surface of valve housing.**
- **Do not reuse Y-packing after removal.**

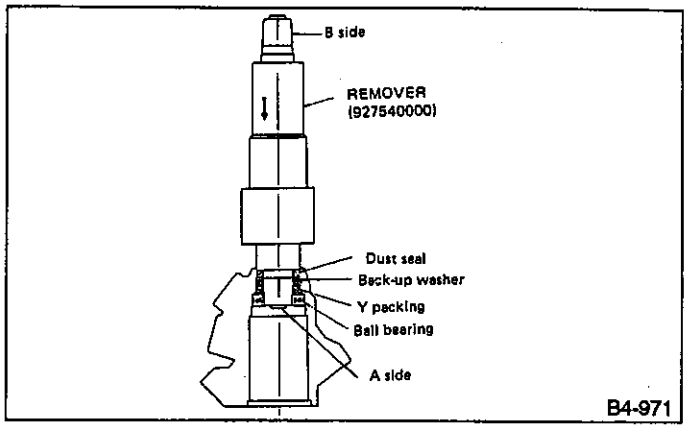

Fig. 77

(3) Remove snap ring securing valve sleeve to pinion & valve ASSY, and remove valve sleeve.

Be careful not to scratch pinion & valve ASSY when removing snap ring.

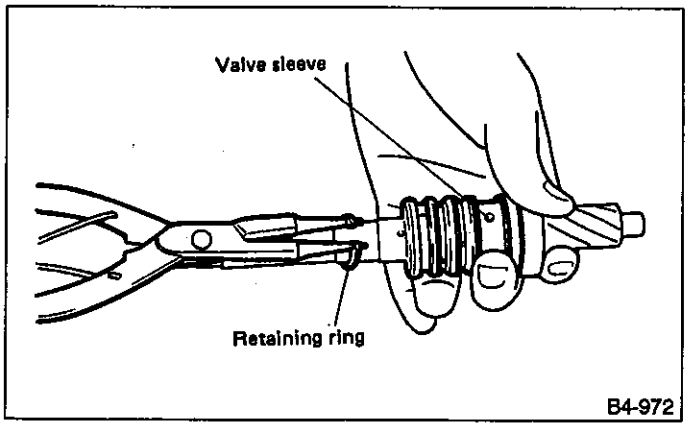

Fig. 78

(4) Remove oil seal and spacer.

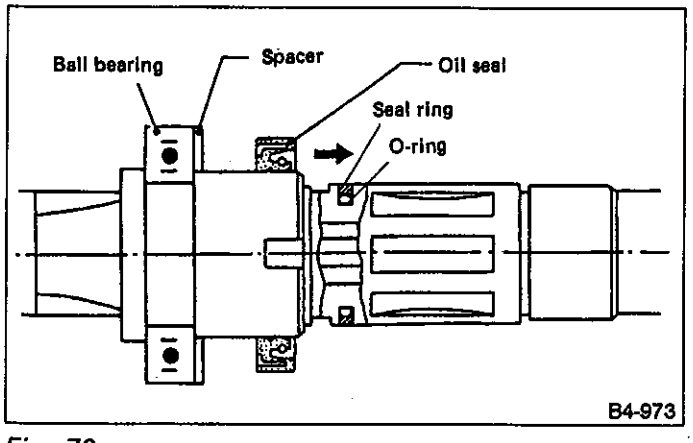

Fig. 79

(5) Using a long rod, remove seal ring and O-ring from pinion ASSY.

Be careful not to scratch outer surface and seal ring groove of input shaft. If scratched, sealing effect will be lost, resulting in a malfunctioning valve.

(6) Wash and clean pinion & valve ASSY and valve housing.

(7) Attach COVER to pinion ASSY, and apply grease to outer perimeter of the cover and mating surface of oil seal.

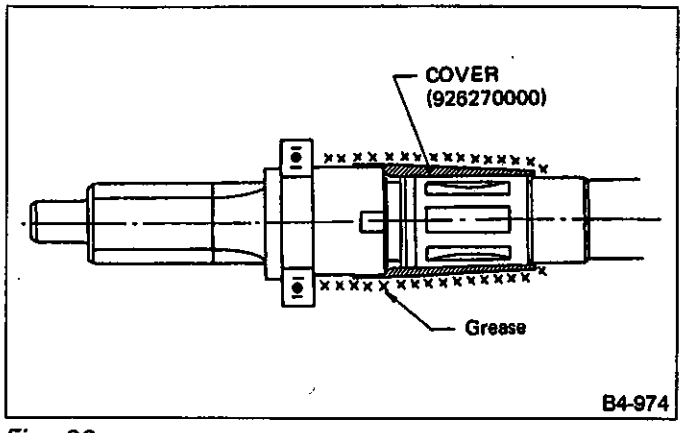

Fig. 80

(8) Apply a coat of grease to spacer and sealing lips of oil seal, and install spacer and oil seal.

- **Face chamfered side of spacer toward oil seal.**
- **Face oil seal in correct direction.**

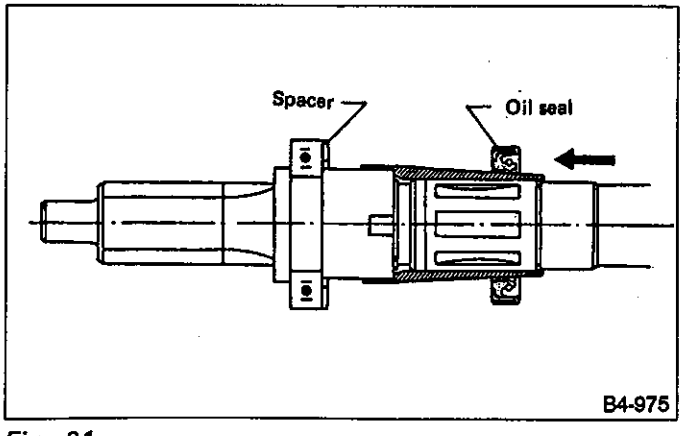

Fig. 81

(9) Install COVER to input shaft, and apply a coat of grease to the cover surface. Install O-ring and seal ring.

Do not expand O-ring and seal ring more than necessary.

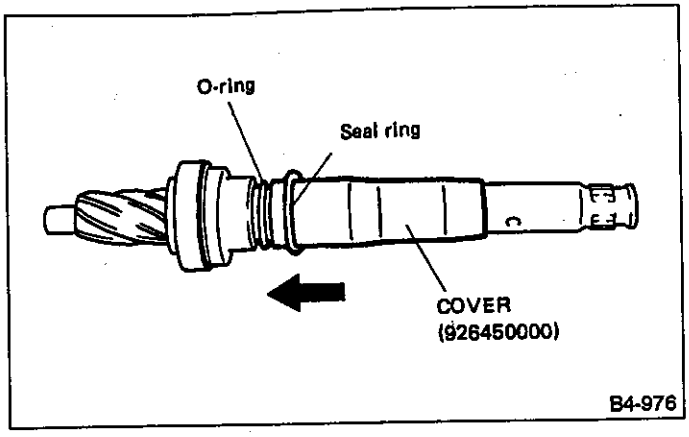

Fig. 82

(10) Apply a coat of grease to inner wall of FORMER, and secure seal ring assembled in step (9) as shown. Leave seal ring unattended for approximately 10 minutes until it settles down.

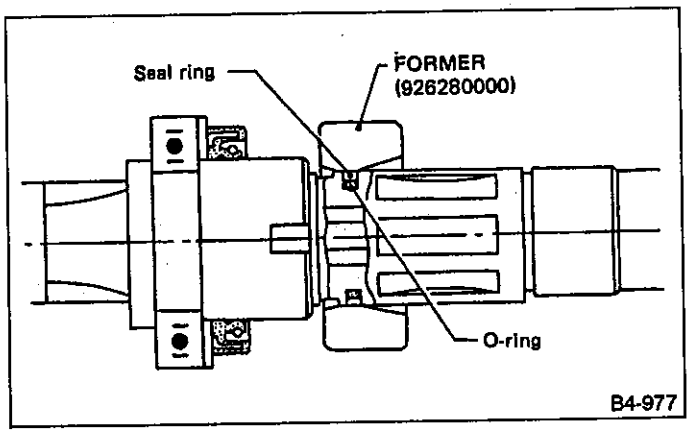

Fig. 83

(11) While aligning valve sleeve pin with groove on pinion ASSY, secure with snap ring.

- **Be careful not to damage inner wall of valve sleeve and contact surface of pinion.**
- **Before assembling valve sleeve and pinion ASSY, clean in kerosene and dry with compressed air.**

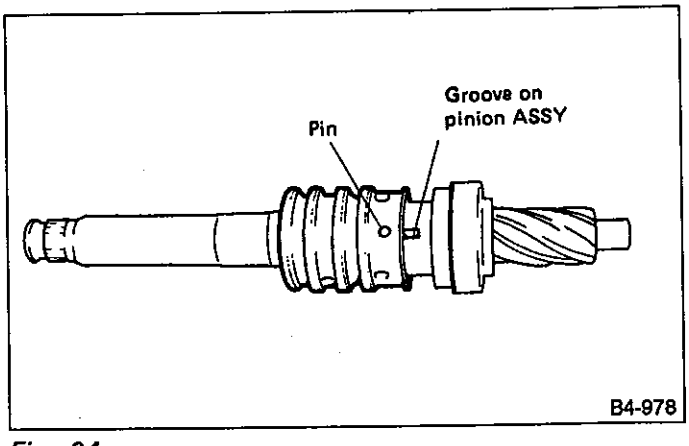

Fig. 84

2) Removal of rack piston seal ring and O-ring

(1) Using a sharp-edged, long rod, remove seal ring and O-ring from rack piston.

Be careful not to scratch outer surface of rack piston and seal ring groove. A scratch may reduce the sealing effect, resulting in faulty piston operation.

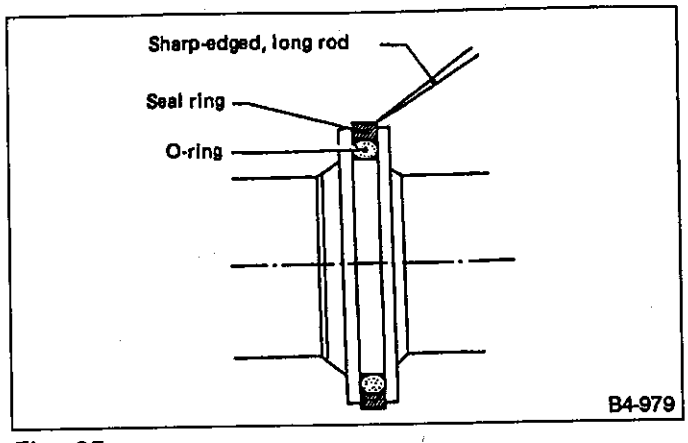

Fig. 85

(2) Wash clean rack piston.

(3) Install O-ring and seal ring in groove on rack piston.

- **Do not expand O-ring and seal ring more than necessary.**
- **To facilitate installation of seal ring, first position one half of entire seal ring in groove. Then slowly position the second half using a spatula, as shown.**

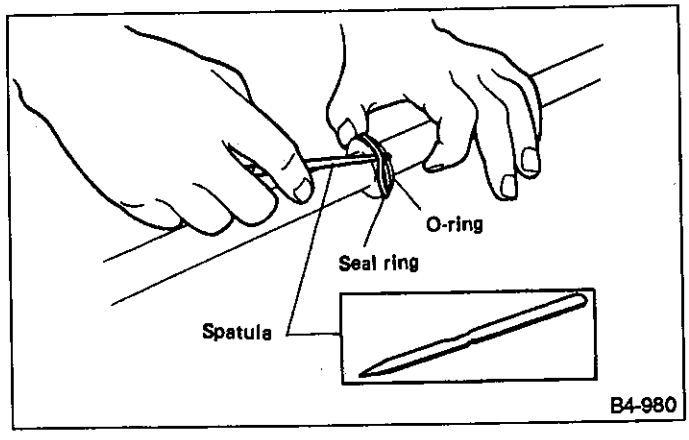

Fig. 86

(4) Apply a coat of grease to inner surface of FORMER (special tool) and insert rack piston into it. Leave FORMER at least 10 minutes until seal ring settles down in place.

Be careful not to scratch rack, piston and seal ring during installation.

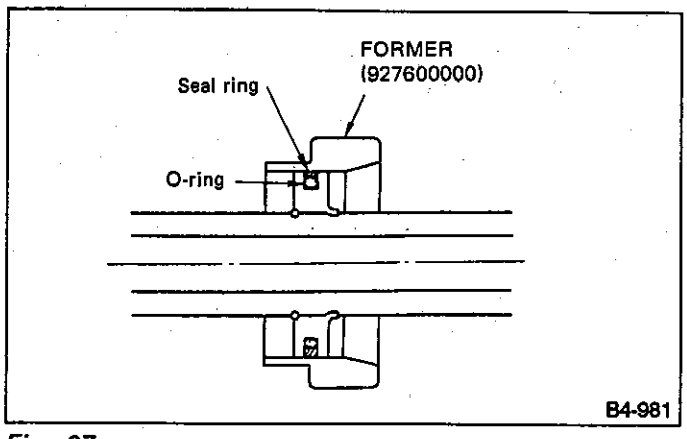

Fig. 87

3) Reassembly of valve ASSY

(1) Apply a coat of grease to inner wall of valve housing, Y-packing and outer perimeter of dust seal.

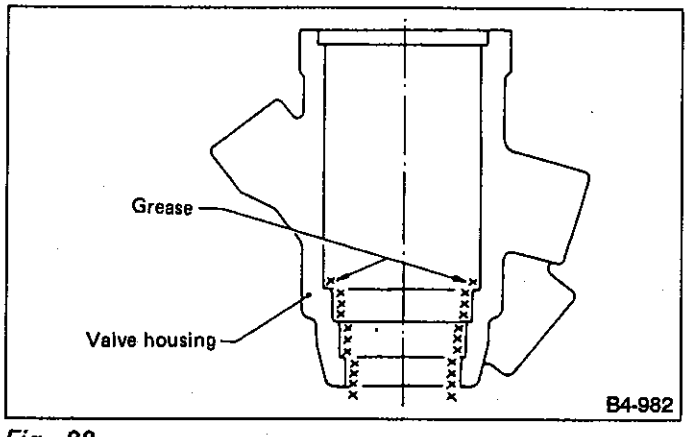

Fig. 88

(2) Using INSTALLER and press, install dust seal.

- **Face dust seal in the direction shown in Figure 91.**
- **Apply a coat of grease to contact surface of installer and dust seal when installing dust seal. Be careful not to scratch dust seal during installation.**

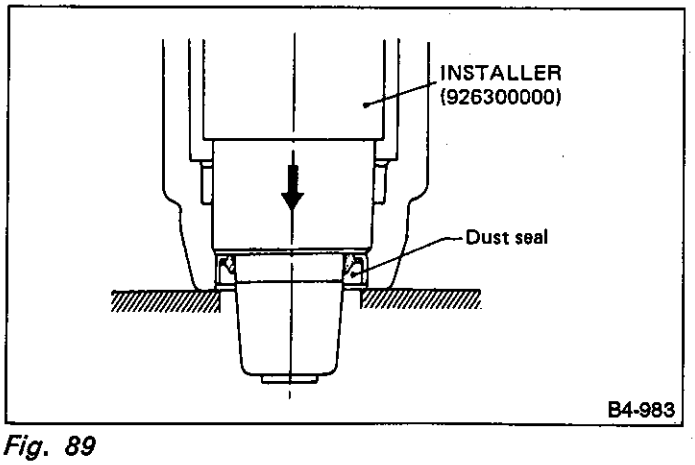

Fig. 89

(3) Using INSTALLER and press, install Y-packing and back-up washer in valve housing.

- **Face Y-packing in the direction shown in Figure 92 when installing.**
- **To avoid scratching Y-packing, apply a coat of grease to contact surface of installer and Y-packing.**
- **To facilitate installation, attach Y-packing and back-up washer to installer and position in valve housing before pressing into place.**

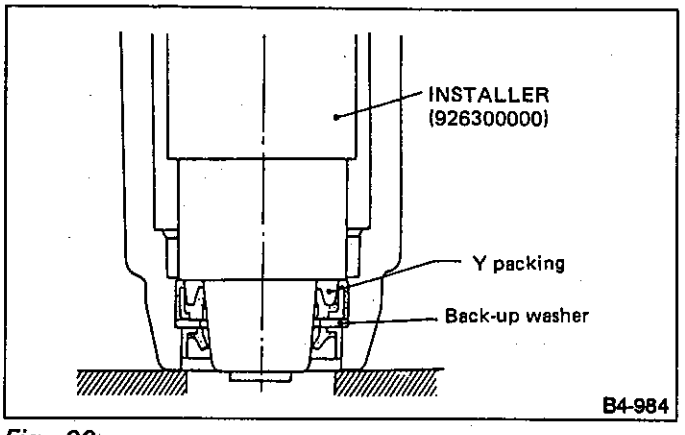

Fig. 90

(4) Attach SPACER to REMOVER, and press ball bearing into place using a press.

- **To facilitate installation, attach ball bearing to remover and position in valve housing before pressing it into place.**
- **Use the "B" end of remover.**

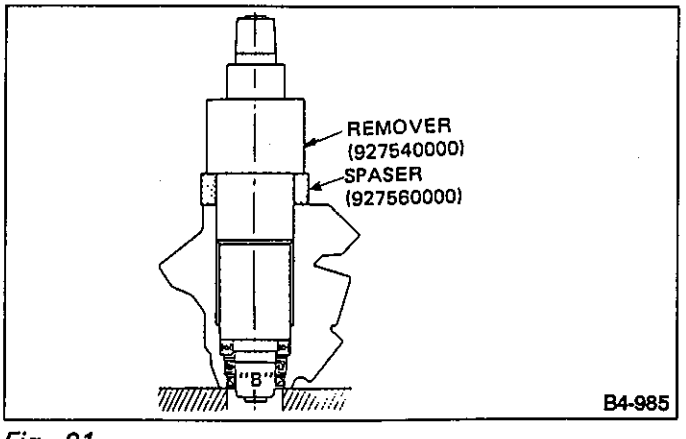

Fig. 91

(5) Charge dust seal with grease.

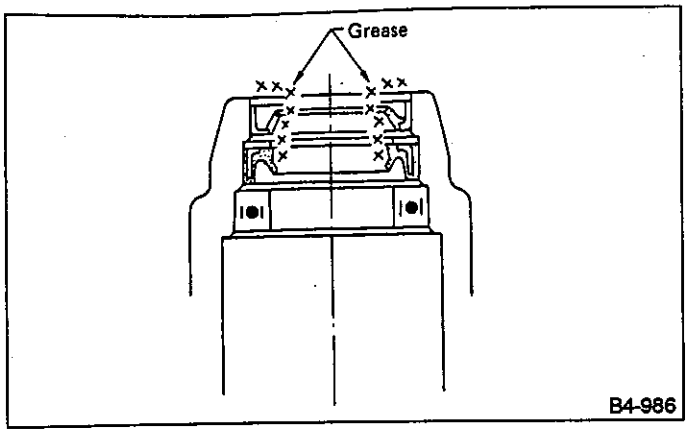

Fig. 92

(6) Apply a coat of grease to GUIDE surface, and install GUIDE onto end of input shaft. Insert pinion & valve ASSY until "A" of oil seal contacts "B" of valve housing. The GUIDE is used to prevent scratching Y-packing.

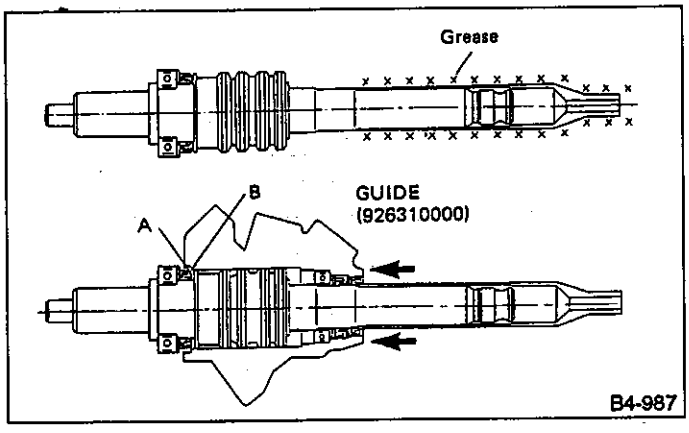

Fig. 93

(7) While supporting pinion & valve ASSY, push end of pinion until bearing contacts brazed end of valve housing.

Do not allow spacer to extend beyond brazed end. Otherwise, pinion cannot be inserted properly.

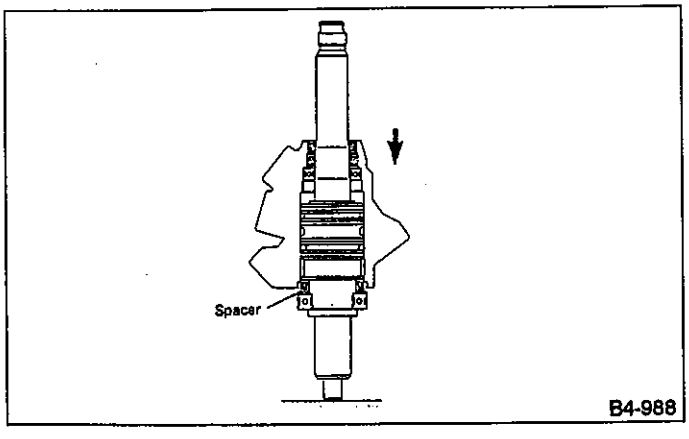

Fig. 94

(8) Apply a coat of grease to sealing lips of dust cover, and insert dust cover until it contacts staged portion of input shaft.

- **Adjust sealing lip-to-housing end clearance to 0 to 0.5 mm (0 to 0.020 in). If sealing lip is too close to housing end, steering wheel will not return smoothly; if it is too far from housing end, dust or dirt will enter the clearance.**
- **Ensure that pinion & valve ASSY is properly positioned in valve housing before adjustment.**

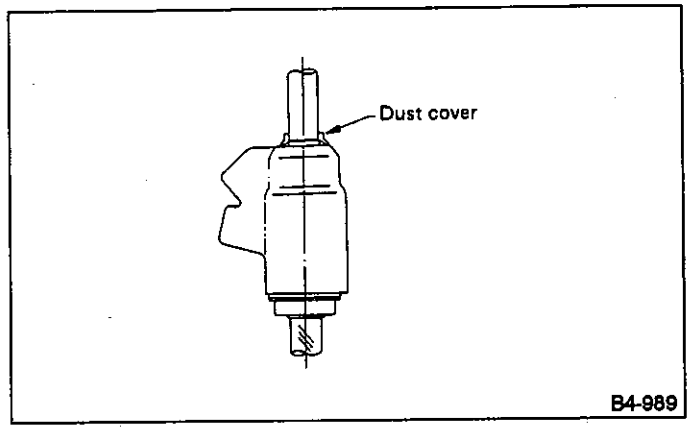

Fig. 95

D: ASSEMBLY

1) Reassembly of rack ASSY

(1) Attach steering body ASSY to STAND as shown. Apply a coat of grease to needle bearing.

- **Use a special tool to support steering body ASSY.**
- **If steering body ASSY is removed from vehicle, be sure to remove rust and clean.**
- **Ensure that needle bearing is free from defects. If it is faulty, replace steering body ASSY with a new one.**

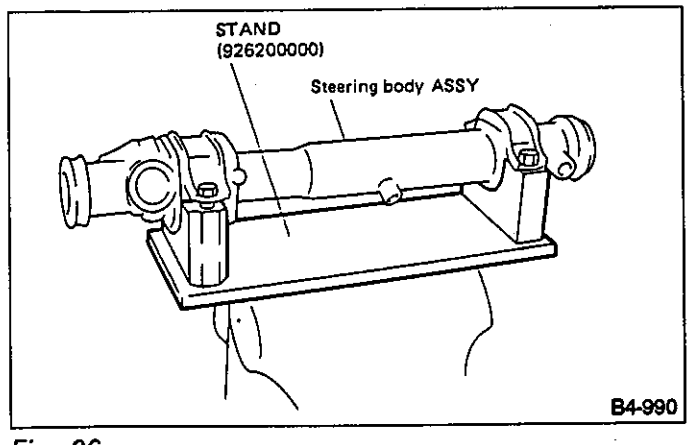

Fig. 96

(2) Using INSTALLERs B and C, attach oil seal to INSTALLER A. Insert INSTALLER A into rack ASSY from gear side. Remove oil seal from INSTALLER A when it approaches piston and remove INSTALLERs from rack ASSY.

Face oil seal in the direction shown in Figure 97.

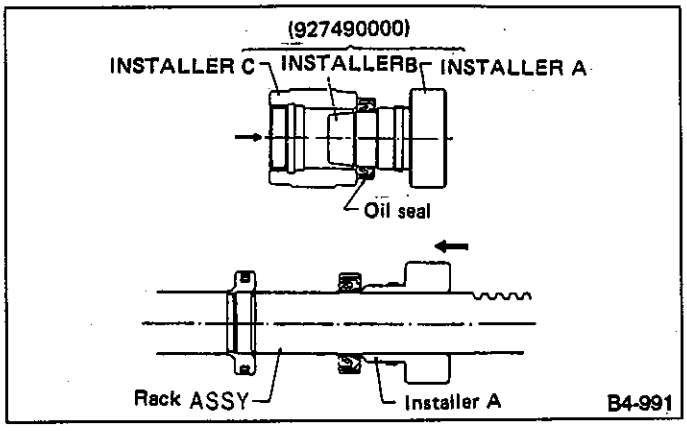

Fig. 97

(3) Install back-up ring from gear side of rack ASSY.

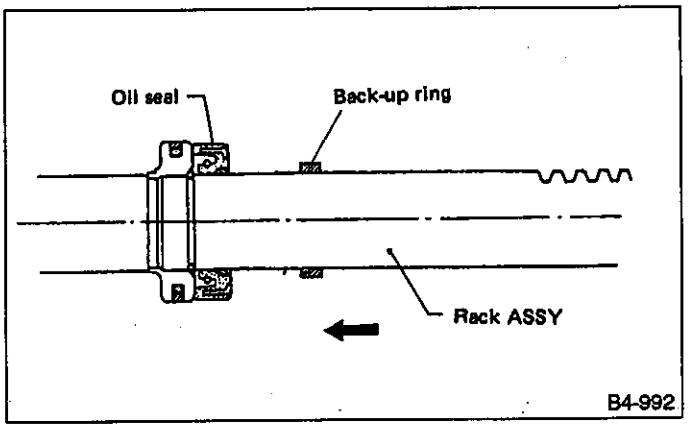

Fig. 98

(4) Apply a coat of grease to grooves in rack, sliding surface of sleeve and sealing surface of piston. Then insert rack ASSY into steering body ASSY from cylinder side.

- Be sure to apply grease so that it covers the entire surface of rack gear teeth.
- Do not allow grease to block air vent hole on rack.

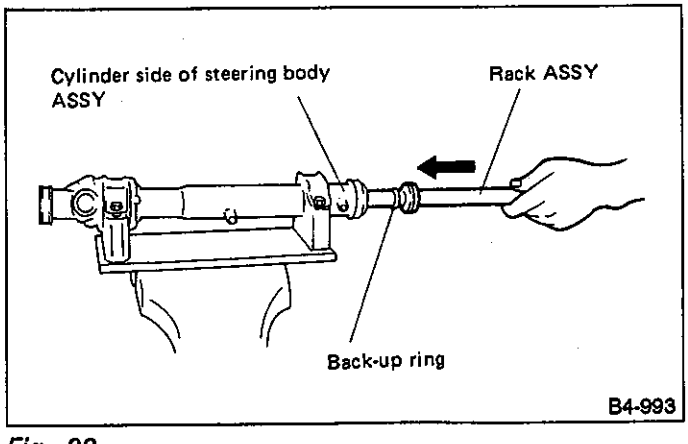

Fig. 99

(5) Installation of holder ASSY
Attach GUIDE to rack ASSY to prevent scratching cylinder, and apply a thin coat of grease to rack ASSY and GUIDE.

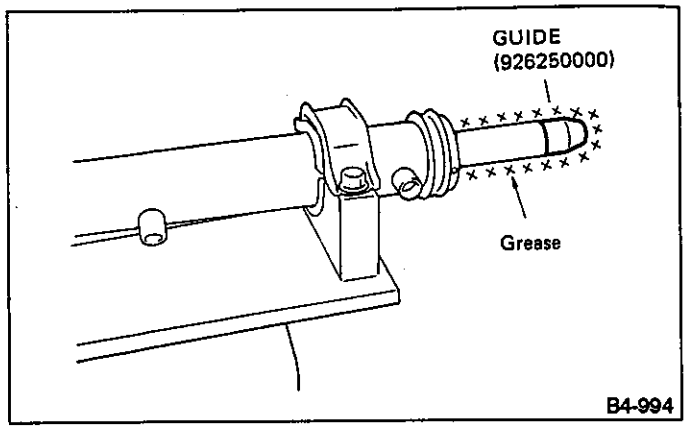

Fig. 100

(6) Apply a coat of grease to inner wall of holder ASSY and O-ring, and install holder ASSY on steering body ASSY.

- **Ensure that guide is free from scratches. Scratches may damage Y-packing.**
- **Be careful not to damage Y-packing lips when installing holder ASSY.**

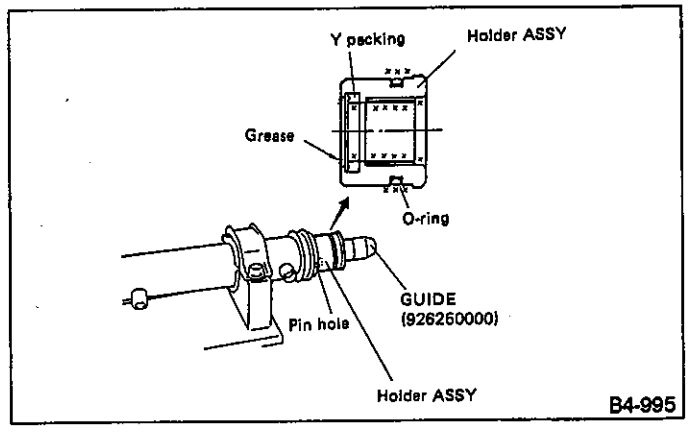

Fig. 101

(7) Apply a coat of grease to snap ring, and insert into groove in steering body ASSY. Secure holder ASSY.

Ensure that both ends of snap ring are close to pin hole when installed.

(8) Attach INSTALLER to rack ASSY's cylinder. Using a press, install back-up ring and oil seal.

Press INSTALLER until its groove is aligned with end of holder ASSY.

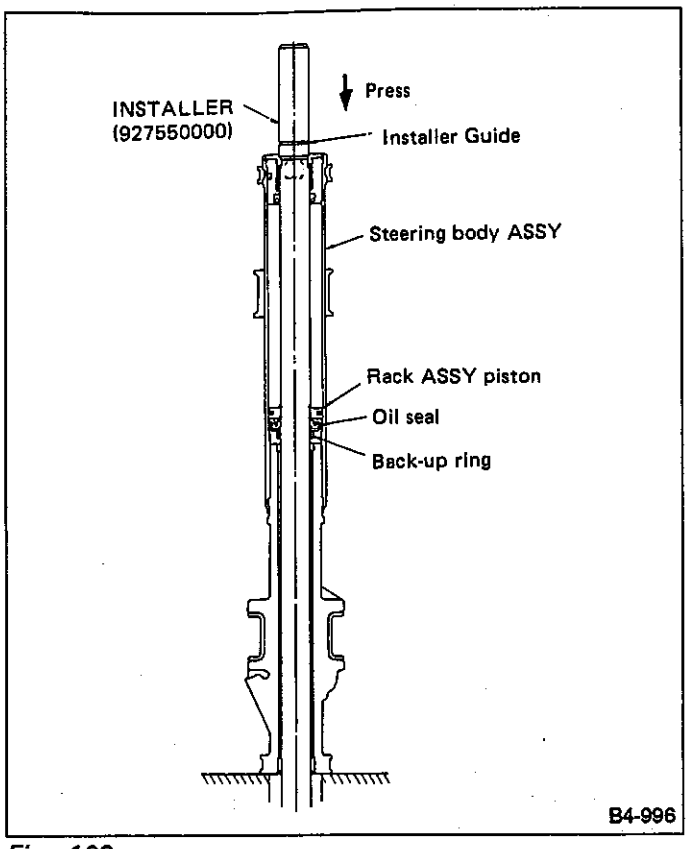

Fig. 102

2) Installation of valve ASSY

(1) Remove traces of sealer, oil, rust, etc., from mating surfaces of valve housing and steering body ASSY.

(2) Position a shim in graded portion of steering body ASSY's pinion housing, and apply an even coat of sealer (Fuji Bond: 004403004) to end of pinion housing.

- **Use the same number of shims as that used when steering body ASSY was removed.**
- **If steering body ASSY, valve housing or pinion & valve ASSY is replaced with a new one, add two or three shims, install valve ASSY on pinion housing and tighten with two bolts to 20 — 29 N•m (2.0 — 3.0 kg-m, 14 — 22 ft-lb). Then, measure clearance between steering body ASSY and valve housing using a thickness gauge. Remove shims so that the clearance is zero.**

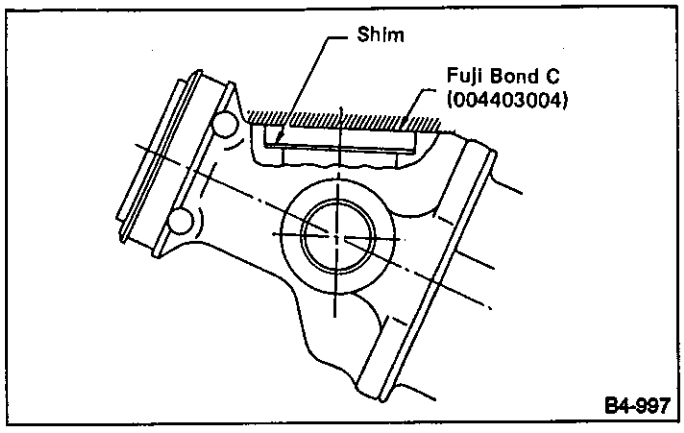

Fig. 103

(3) Extend rack ASSY 72.4 mm (2.850 in) beyond pinion side of steering body ASSY.

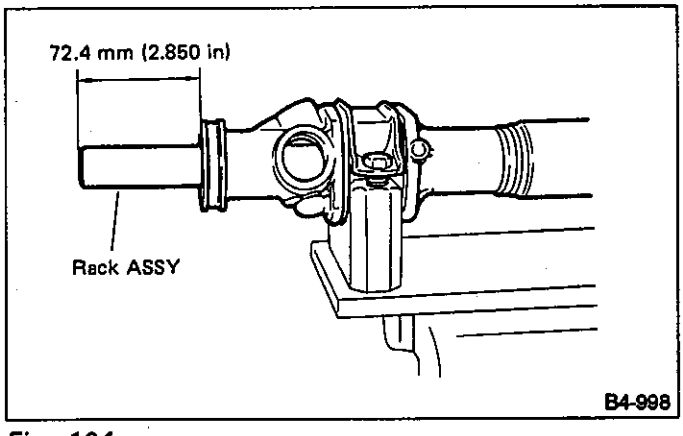

Fig. 104

(4) Apply grease to pinion gear teeth and ball bearing. Insert valve ASSY into place.

(5) Alternately and slowly tighten socket bolts.

Replace faulty parts before installing valve ASSY. Otherwise, valve ASSY may not be installed properly.

Tightening torque:
20 — 29 N•m (2.0 — 3.0 kg-m, 14 — 22 ft-lb)

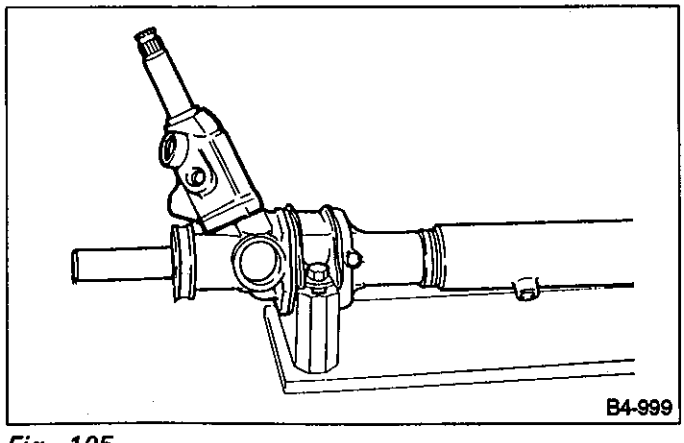

Fig. 105

5. Hose ASSY (Power Steering System)

A: REMOVAL

1) Disconnect battery minus terminal.
2) Lift vehicle and remove jack-up plate.

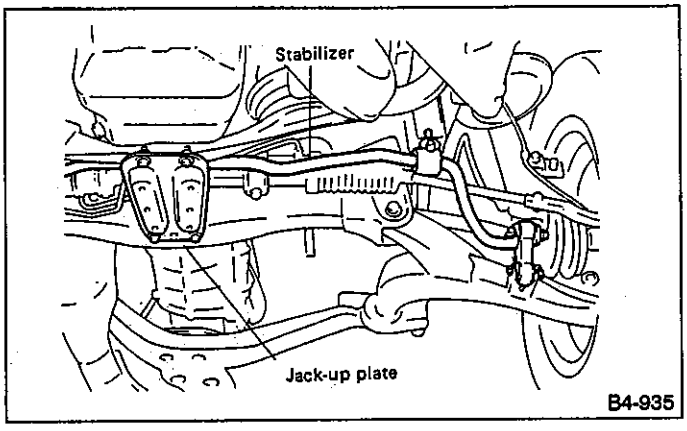

Fig. 106

3) Disconnect one pipe and joint from center of gearbox ASSY, and connect a vinyl hose to them. While turning the steering wheel to the left and right, drain fluid through the hose. Similarly, drain fluid from the other pipe and joint line.

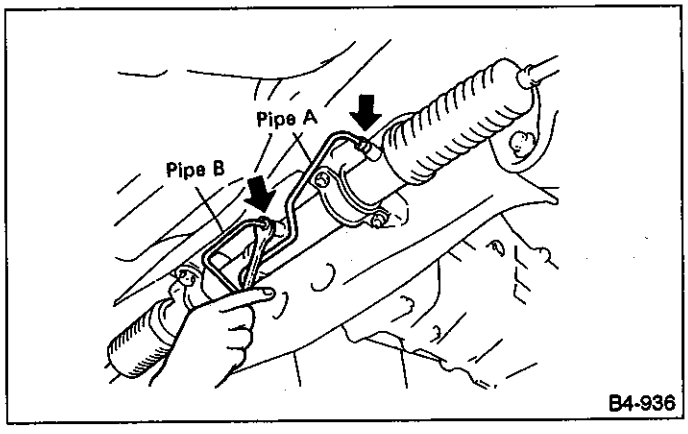

Fig. 107

4) Remove flare nuts from control valve of gearbox ASSY, and disconnect upper and lower hoses A and B.

- **Always disconnect hose A and hose B in that order.**
- **Be careful not to damage the hoses during removal.**

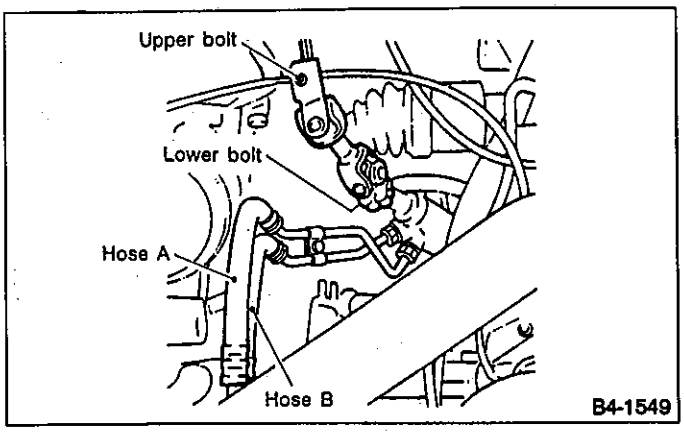

Fig. 108

5) Remove bolt A.
Disconnect pipe C from oil pump. Disconnect pipe D from oil tank.

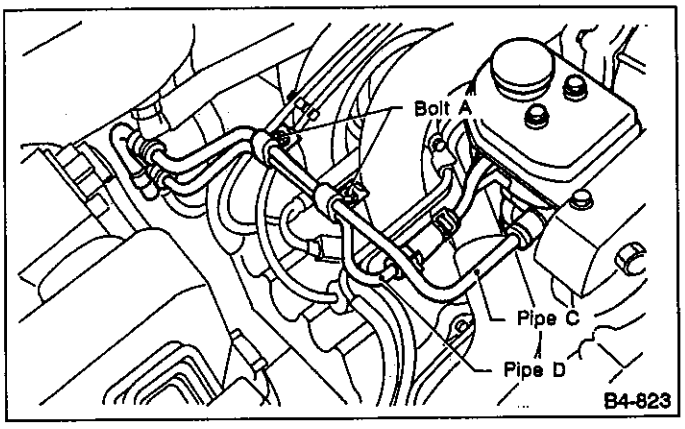

Fig. 109

a. Do not allow fluid from the hose end to come into contact with pulley belt.
b. To prevent foreign matter from entering the hose and pipe, cover the open ends of them with a clean cloth.

B: CHECK

Check all disassembled parts for wear, damage or other abnormalities. Repair or replace faulty parts as required.

Part name	Inspection	Remedy
Pipe	• O-ring fitting surface for damage • Nut for damage • Pipe for damage	Replace with new one.
Clamp	• Clamps for weak clamping force	Replace with new one.
Hose	• Flared surface for damage • Flare nut for damage • Outer surface for cracks • Outer surface for wear • Clip for damage • End coupling or adapter for degradation	Replace with new one.

C: ASSEMBLY

1) Interconnect pipes C and D.

Tightening torque:
Joint nut
10 — 20 N•m (1.0 — 2.0 kg-m, 7 — 14 ft-lb)

Visually check that hose between tank and pipe D is free from bending or twisting.

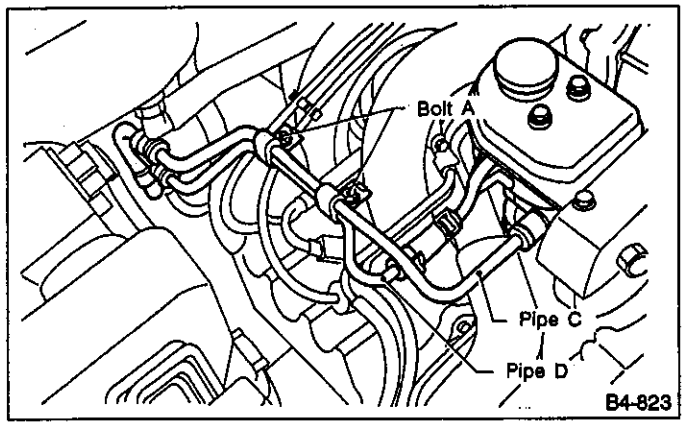

Fig. 110

2) Tighten bolt A.

Reference
Tightening torque:
10 — 16 N•m (1.0 — 1.6 kg-m, 7 — 12 ft-lb)

3) Temporarily connect pipes C and D to the gearbox (on the gearbox side).
4) Connect pressure and return hoses, and tighten pipes C and D to specified torque.

6. Oil Pump (Power Steering System)

A: REMOVAL

1) Remove ground cable from battery.
2) Remove belt cover.
3) Loosen slider bolt lock nut. Loosen slider bolt, and remove V-belt while lowering alternator.

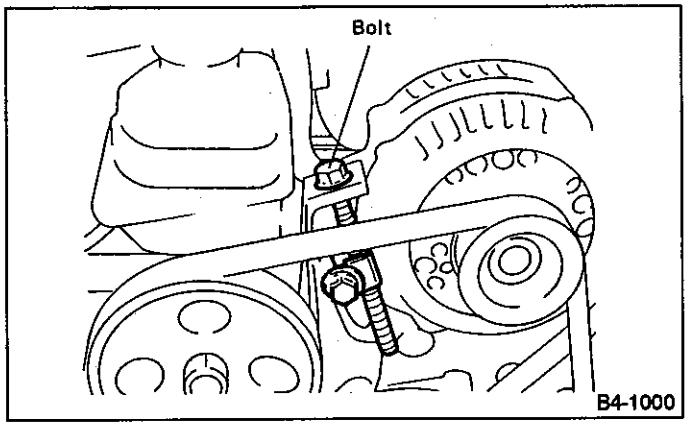

Fig. 111

4) Remove nut from front end of oil pump pulley, and detach oil pulley.

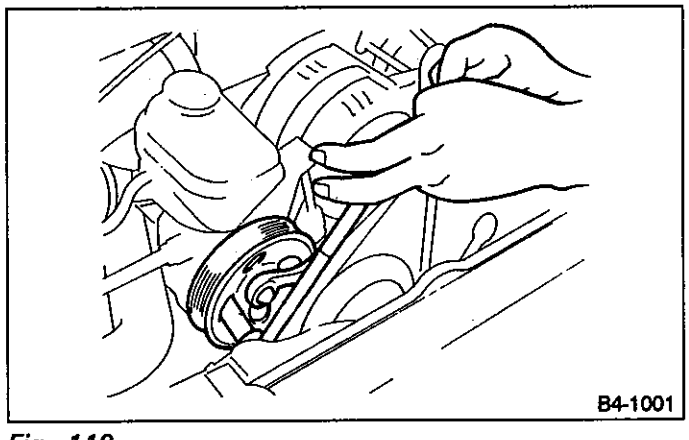

Fig. 112

5) Drain approximately 0.3 liters (0.3 US qt, 0.3 Imp qt) of fluid from oil tank.

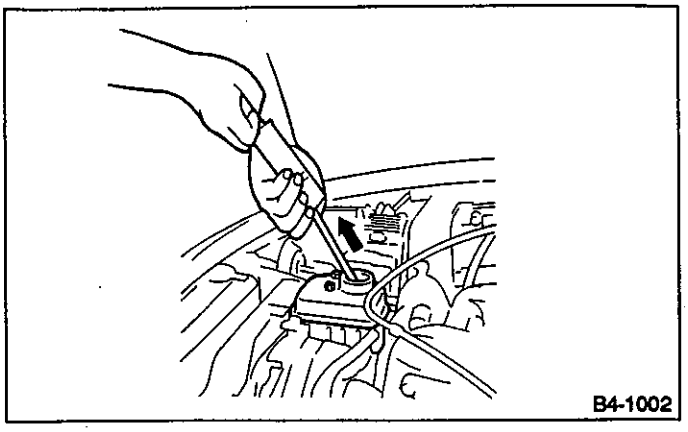

Fig. 113

6) Disconnect hose A from pump.
7) Disconnect hose B from oil tank.

- **Be careful not to spill fluid from hose end to V-belt.**
- **Cover open ends of hose and pipe with a clean cloth to prevent entry of foreign matter.**

8) Remove bolts from front of pump, and detach pump and tank.
9) Place pump in a vise, and remove bolts from upper surface of tank.

- **Use soft jaws and lightly tighten vise jaws.**
- **After bolts are loose enough to be rotated with your hand, press pump against tank while removing bolts. Failure to do so causes fluid to spill out. Remove tank as quickly as possible, and wipe clean fluid spilled on parts. Except when only tank is to be checked, remove tank and pump as a unit and separate from each other on a work bench. This prevents fluid from spilling on the engine.**

B. CHECK

- In accordance with the following table, check all removed parts for wear and damage, and make repair or replacement if necessary.

No.	Parts	Inspection	Corrective action
1	Oil pump (Outside)	(1) Crack, damage or oil leakage	Replace oil pump ASSY with a new one.
		(2) Play of pulley shaft	Measure radial play and axial play. If any of these exceeds the service limit, replace oil pump ASSY with a new one. (Refer to "Service limit".)
2	Pulley	(1) Damage	Replace it with a new one.
		(2) Bend	Measure V ditch deflection. If it exceeds the service limit, replace pulley with a new one. (Refer to "Service limit".)
3	Cap	Crack or damage	Replace it with a new one.
4	Strainer	(1) Clogging with dirt	Wash it.
		(2) Breakage	Replace it with a new one.
5	Oil pump (Interior)	(1) Defect or burning of vane pump	Check resistance to rotation of pulley. If it is past the service limit, replace oil pump ASSY with a new one. (Refer to "Service limit".)
		(2) Bend in the shaft or damage to bearing	Oil pump emits a noise that is markedly different in tone and loudness from a sound of a new oil pump when turning with a string put around its pulley, replace oil pump ASSY with a new one.
6	O-ring	Crack or deterioration	Replace it with a new one.
7	Oil tank	Crack, damage or oil leakage	Replace it with a new one.
8	Bracket	Crack	Replace it with a new one.

1. SERVICE LIMIT

Make a measurement as follows. If it exceeds the specified service limit, replace the parts with a new one.

a. Fix oil pump ASSY on a vise to make a measurement. At this time, hold oil pump ASSY with the least possible force between two wood pieces.
b. Do not set outside of flow control valve or pulley on a vise; otherwise outside or pulley might be deformed. Select properly sized wood pieces.
Play of pulley shaft

Service limit:
Radial play (Direction ⟷)
0.4 mm (0.016 in) or less
Axial play (Direction ⇔)
0.9 mm (0.035 in) or less

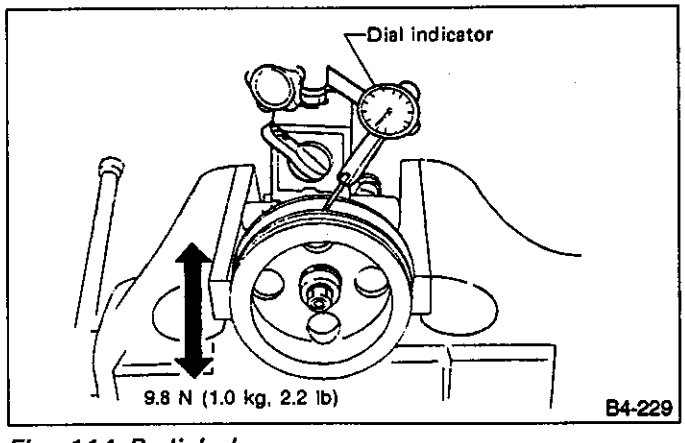

Fig. 114 Radial play

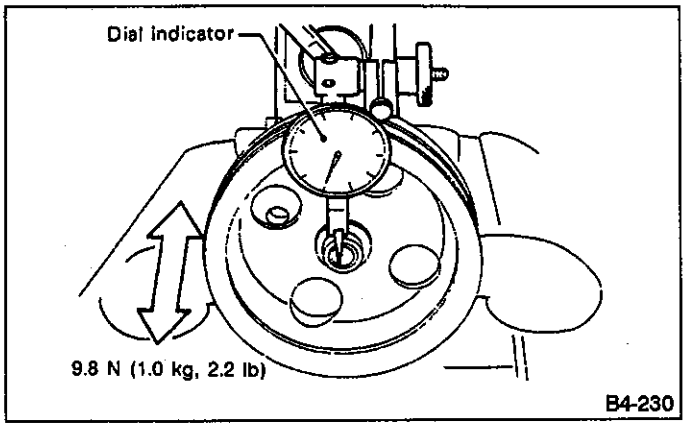

Fig. 115 Axial play

Ditch deflection of pulley

Service limit:
1.0 mm (0.039 in) or less

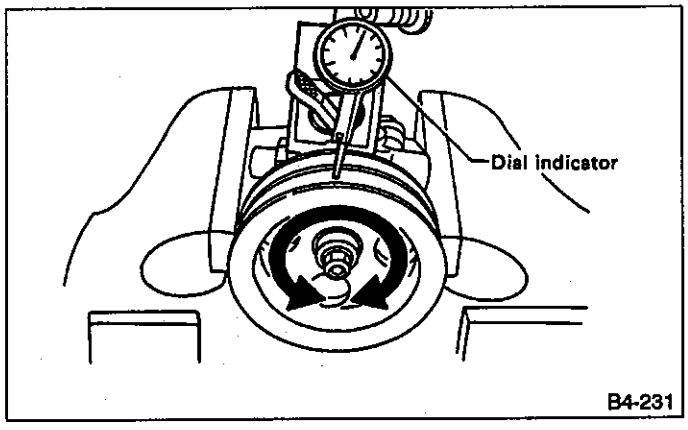

Fig. 116

Read the value for one surface of V ditch, and then the value for another off the dial.
Resistance to rotation of pulley

Service limit:
Maximum load; 9.22 N (0.94 kg, 2.07 lb) or less

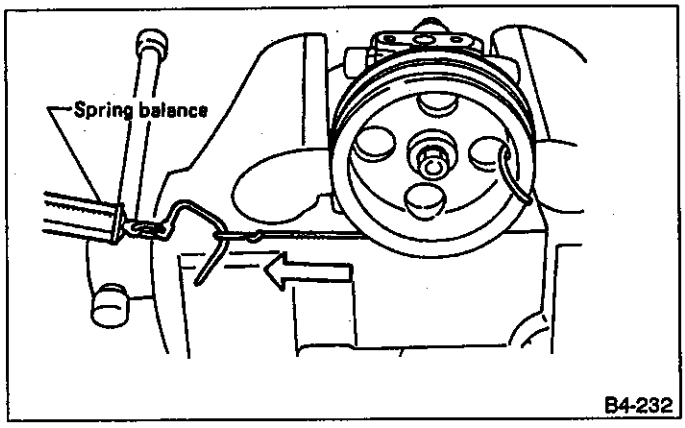

Fig. 117

A rather higher value may be indicated when pulley starts turning.
Measure the load during rotation and make a judgment.

C: DISASSEMBLY

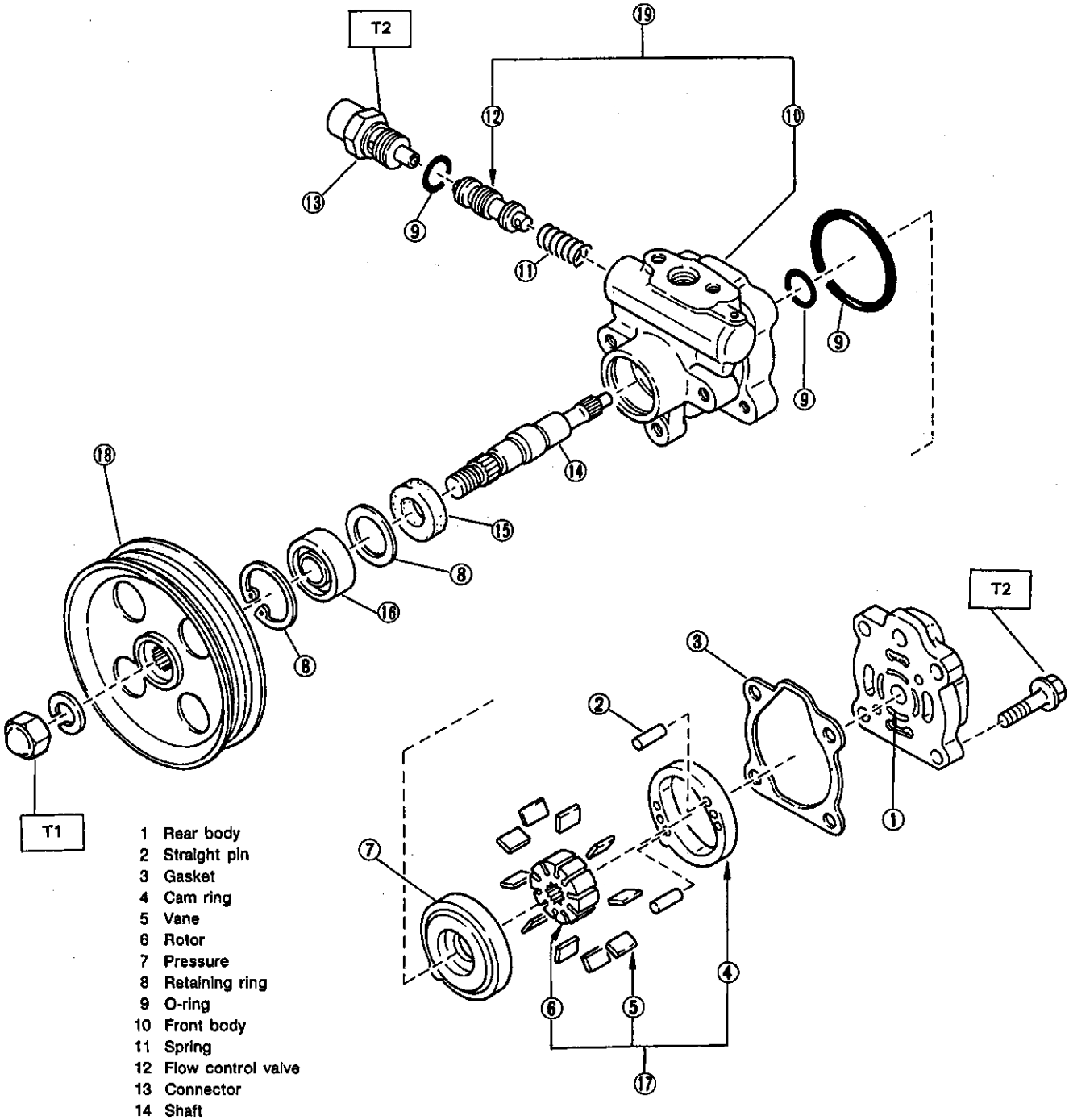

1 Rear body
2 Straight pin
3 Gasket
4 Cam ring
5 Vane
6 Rotor
7 Pressure
8 Retaining ring
9 O-ring
10 Front body
11 Spring
12 Flow control valve
13 Connector
14 Shaft
15 Oil seal
16 Ball bearing
17 Cartridge
18 Pulley
19 Front body & Valve ASSY

Tightening torque: N•m (kg-m, ft-lb)
T1: 42 — 62 (4.3 — 6.3, 31 — 46)
T2: 29 — 39 (3.0 — 4.0, 22 — 29)

B4-1550

Fig. 118

1) Place pump bracket (with pump installed) in a vise using soft jaws.

- **Do not place pump itself in a vise.**

2) Valve removal
Disconnect connectors and remove valve ASSY and spring.

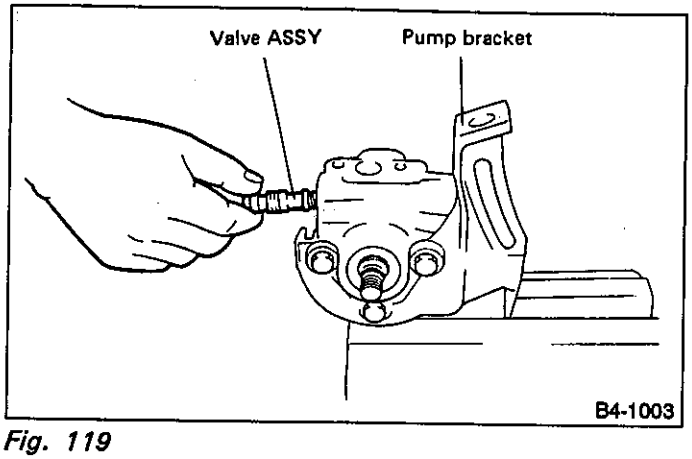

Fig. 119

3) Rear body removal

(1) Loosen bolts securing rear body so that they can be rotated by hand.

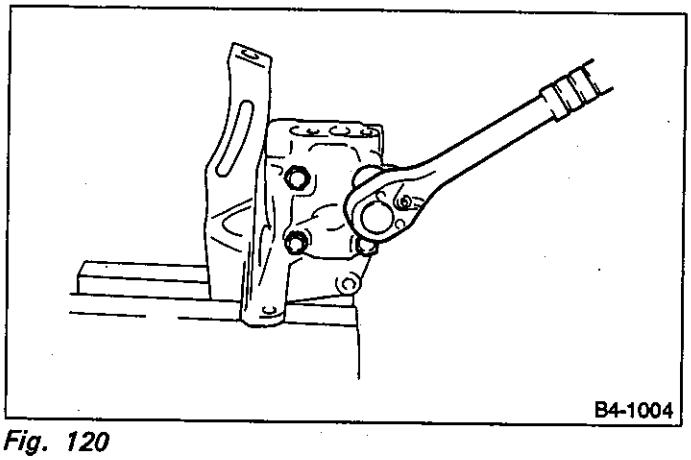

Fig. 120

(2) Remove pump from pump bracket.
(3) Remove pump bracket from vise.
(4) Place pump in a vise.

Use soft jaws.

(5) Remove bolts which have already been loosened in step (1) above.

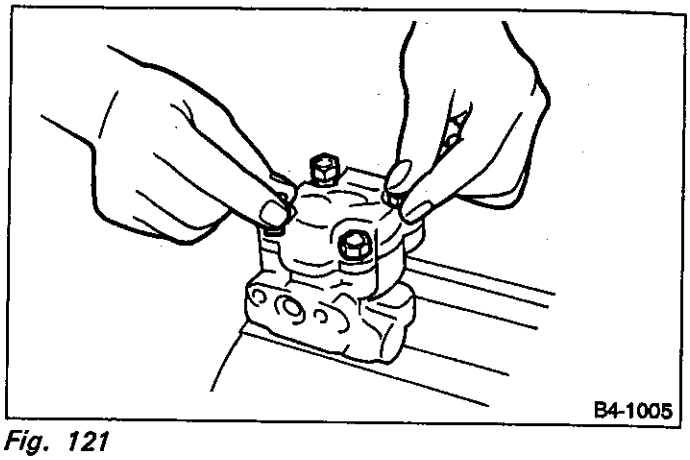

Fig. 121

(6) Remove gasket.

4) Removal of cartridge ASSY, pressure plate and pin
Remove cartridge ASSY, pressure plate and pin from front body as a unit. (Cartridge ASSY consists of a rotor, ten vanes and a cam.)

Be careful not to scratch cartridge ASSY.

5) Remove two types of O-rings by hand.

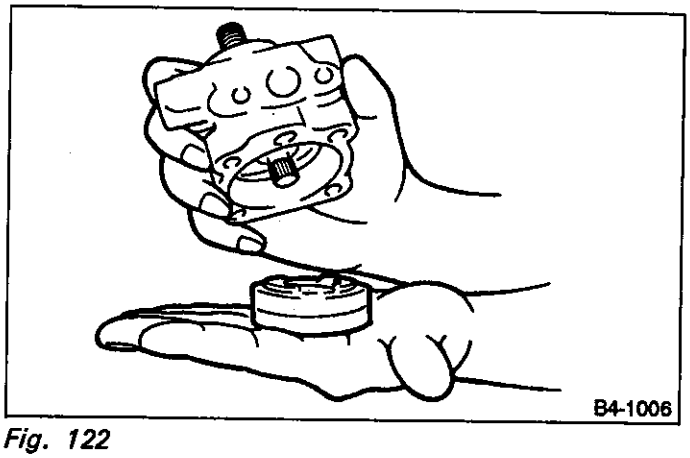

Fig. 122

6) Disassembly of front body

(1) Pry off retaining ring from inner perimeter groove of front body at pulley location.

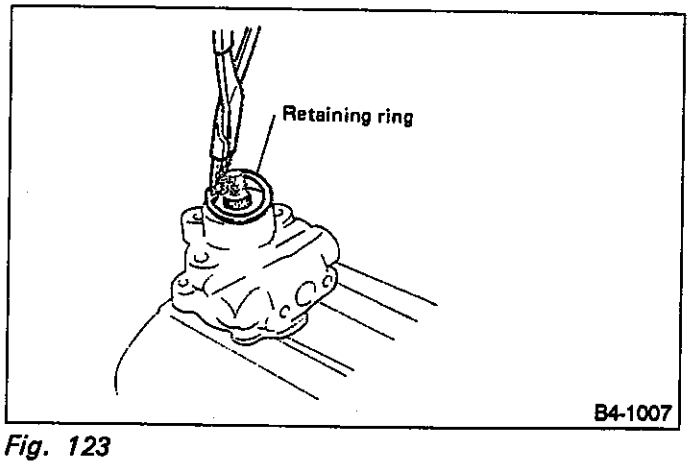

Fig. 123

(2) Using a hand press, press out drive shaft (on the cartridge side).
(3) Press ball bearing out of drive shaft using a hand press.
(4) Remove oil seal by attaching it to a hooked-end plate placed in a vise.

Use a plate without sharp edges.

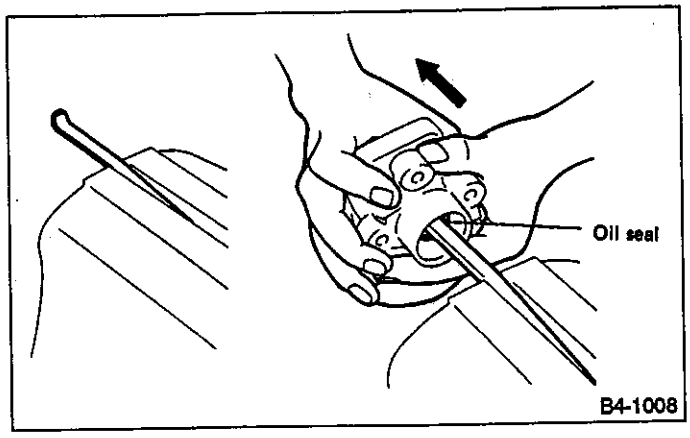

Fig. 124

D: INSPECTION

Perform following inspection procedures and repair or replace defective parts.

Part name	Description	Remedy
1. Front casing	1) Damage on body surfaces 2) Excessive wear on hole, into which spool valve is inserted. 3) Wear and damage on cartridge ASSY mounting surface 4) Wear and damage on surfaces in contact with shaft and oil seal	Replace with a new one together with spool valve as selective fit is made.
2. Rear cover	1) Damage on body surfaces 2) Wear and damage on sliding surfaces	Replace with a new one.
3. Shaft	1) Shaft bend 2) Wear and damage on surfaces in contact with bushing and oil seal 3) Wear and damage on rotor mounting surfaces 4) Bearing damage	Replace with a new one.
4. Side plate	Wear and damage on sliding surfaces	Replace with a new one.
5. Cam ring	Ridge wear on sliding surfaces	If damage is serious, replace with a new cartridge ASSY.
6. Vane	Excessive wear on nose radius and side surfaces	
7. Rotor	1) Wear and damage on sliding surfaces 2) Ridge wear on vane sliding grooves (If light leaks with vane in slit against light source)	
	3) Damage resulting from snap ring removal	Correct with oil stone. If damage is serious, replace with a new cartridge ASSY.
8. Spool valve	Damage or burrs on sliding surface periphery	Replace with a new one together with front casing as selective fit is made.
9. Connector	Damage on threads	Replace with a new one.
10. Spring	Damage	Replace with a new one.
11. Bolts and nuts	Damage on threads	Replace with a new one.

E: ASSEMBLY

1) Installation of oil seal
Apply a coat of lithium grease to outer perimeter of oil seal and charge sealing lips with grease. Using INSTALLER and a hand press, press oil seal into front body.

Place the seating surface of front body on a soft cloth to prevent it from sustaining scratches while pressing oil seal into place.

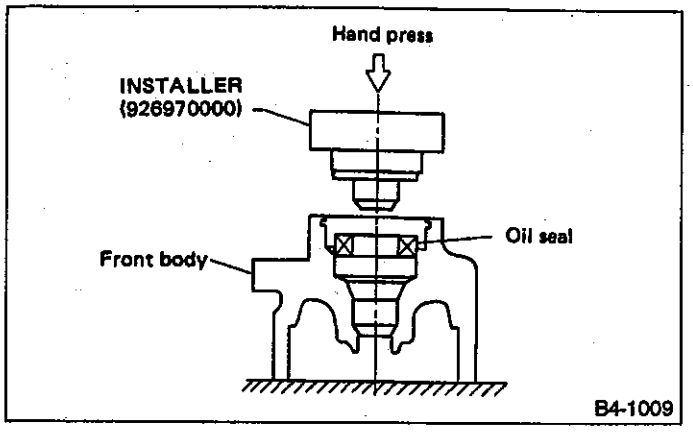

Fig. 125

2) Installation of drive shaft

(1) Using GUIDE and a hand press, drive bearing onto shaft.

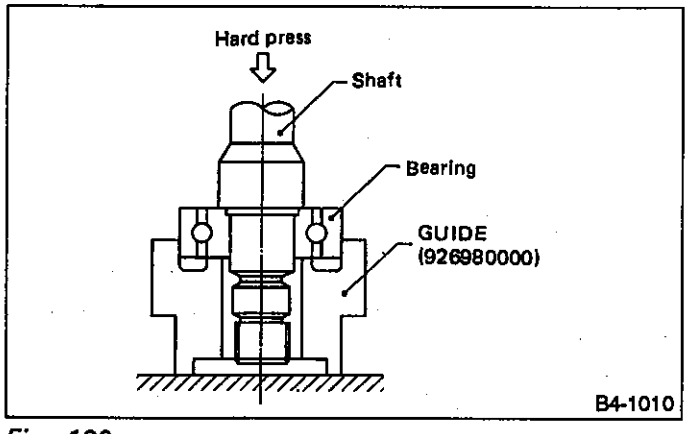

Fig. 126

(2) Install retaining ring on oil seal. Using GUIDE, press shaft & bearing ASSY into front body.

- **Be careful not to strike shaft splines on oil seal's sealing lips during installation.**
- **Do not hit end of shaft during installation.**

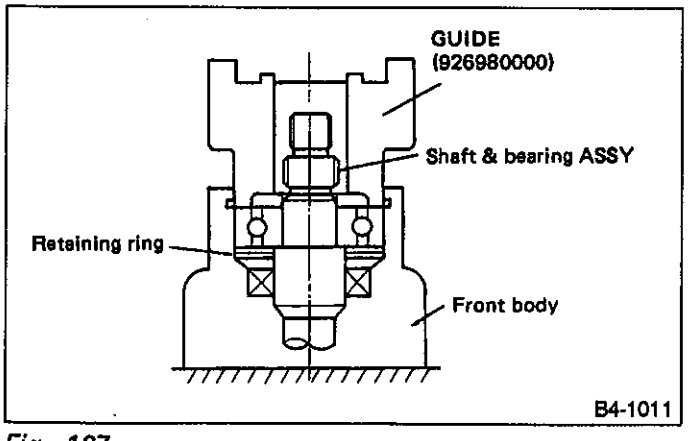

Fig. 127

(3) Lock drive shaft using a retaining ring.

3) Installation of pressure plate

Place front body in a vise with pulley side facing down. Position two O-rings and pressure plate in front body in that order.

Do not forget to install O-rings.

4) Installation of cartridge

(1) Install cam, rotor and vane in that order.
(2) Insert pin into holes in cam and pressure plate.

- **Ensure that vane is installed with "R" side facing the cam.**
- **Check that vane moves smoothly.**
- **Apply a coat of automatic transmission fluid (DEXRON II) to vane.**

5) Installation of rear body

(1) While aligning pin hole of rear body with pin on the pump, install rear body using a gasket and tighten bolts by hand.
(2) Remove pump from vise.
(3) Place pump bracket in a vise, install pump on pump bracket.
(4) Tighten rear body mounting bolts in a criss-cross fashion to one-half of specified torque, then tighten to specified torque.

After tightening rear body mounting bolts, ensure that shaft rotates properly.

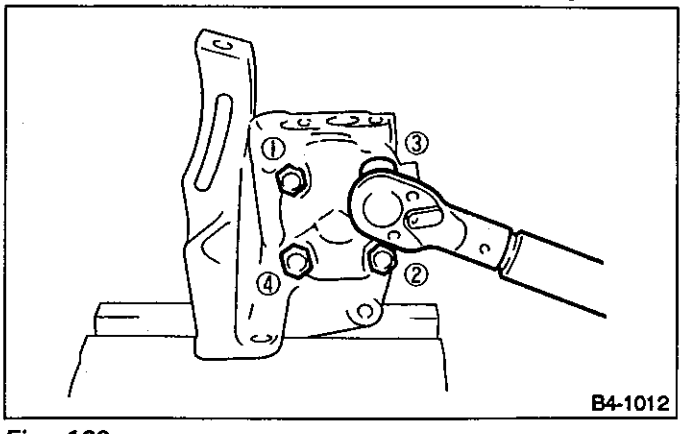

Fig. 128

6) Installation of valve

(1) Position spring and valve ASSY in front body in that order.
(2) Connect connector to front body with an O-ring in place.

Tightening torque:
29 — 39 N·m (3.0 — 4.0 kg-m, 22 — 29 ft-lb)

F: INSTALLATION

To install, reverse the order of removal procedures. Replenish specified fluid and purge air.

Do not operate engine before replenishing fluid as this will seize oil pump.

G: RECOMMENDED POWER STEERING FLUID

Recommended power steering fluid	Manufacturer
ATF DEXRON II	B.P.
	CALTEX
	CASTROL
	MOBIL
	SHELL
	TEXACO

1) Feed the specified fluid with its level being about 4 cm (1.6 in) lower than the mouth of tank.
2) Continue to turn steering wheel slowly from lock to lock until bubbles stop appearing in the tank while keeping the fluid at that level.

In case air is absorbed to deliver bubbles into piping because the fluid level is lower, leave it about half an hour and then do the step (2) all over again.

3) Start, and idle the engine.
4) Continue to turn steering wheel slowly from lock to lock again until bubbles stop appearing in the tank while keeping the fluid at that level.
It is normal that bubbles stop appearing after three times turning of steering wheel.

In case bubbles do not stop appearing in the tank, leave it about half an hour and then do the step (4) all over again.

5) Stop the engine, and take out safety stands after jacking up vehicle again.
Then lower the vehicle, and idle the engine.
6) Continue to turn steering wheel from lock to lock until bubbles stop appearing and change of the fluid level is within 3 mm (0.12 in).

In case the following happens, leave it about half an hour and then do step (6) again.
a. The fluid level changes over 3 mm (0.12 in).
b. Bubbles remain on the upper surface of the fluid.
c. Grinding noise is generated from oil pump.

7) Check the fluid leakage at flare nuts after turning steering wheel from lock to lock with engine running.

a. Before checking, wipe off any fluid on flare nuts and piping.
b. In case the fluid leaks from flare nut, it is caused by dust (or the like) and/or damage between flare and tapered seat in piping.
So remove the flare nut, tighten again it to the specified torque after cleaning flare and tapered seat. If flare or tapered seat is damaged, replace it with a new one.

8) Inspect fluid level on flat and level surface with engine "OFF" by indicator of filler cap.
If the level is at lower point or below, add fluid to keep the level in the specified range of the indicator. If at upper point or above, drain fluid by using a syringe or the like.

Fluid capacity:
0.7 ℓ (0.7 US qt, 0.6 Imp qt)

(1) Check at temperature 21°C (70°F) on reservoir surface of oil pump.

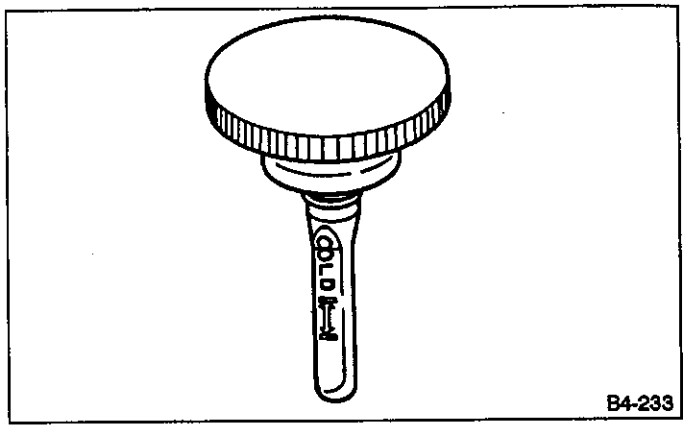

Fig. 129

(2) Check at temperature 60°C (140°F) on reservoir surface of oil pump.

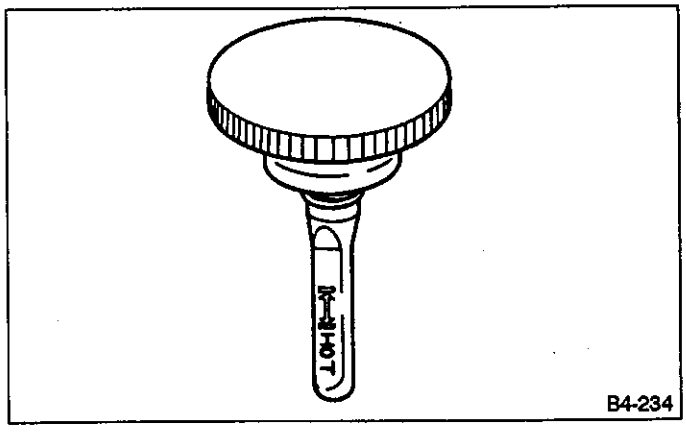

Fig. 130

T TROUBLESHOOTING

1. Power Steering

1. STEERING CONDITION

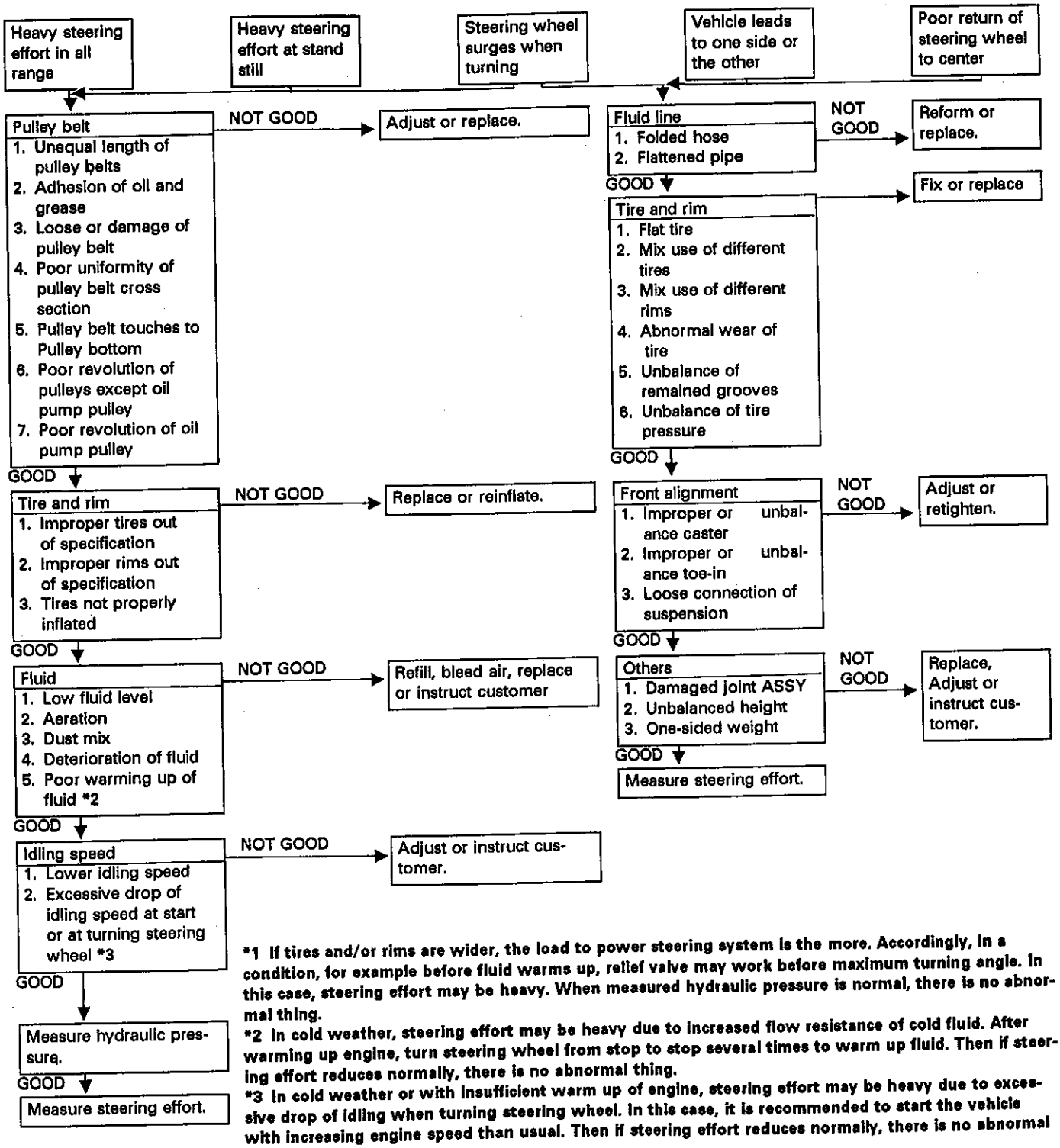

***1 If tires and/or rims are wider, the load to power steering system is the more. Accordingly, in a condition, for example before fluid warms up, relief valve may work before maximum turning angle. In this case, steering effort may be heavy. When measured hydraulic pressure is normal, there is no abnormal thing.**

***2 In cold weather, steering effort may be heavy due to increased flow resistance of cold fluid. After warming up engine, turn steering wheel from stop to stop several times to warm up fluid. Then if steering effort reduces normally, there is no abnormal thing.**

***3 In cold weather or with insufficient warm up of engine, steering effort may be heavy due to excessive drop of idling when turning steering wheel. In this case, it is recommended to start the vehicle with increasing engine speed than usual. Then if steering effort reduces normally, there is no abnormal thing.**

2. MEASUREMENT OF HYDRAULIC PRESSURE

Be sure to complete all items aforementioned in article 1), prior to measuring hydraulic pressure. Otherwise, pressure can not be measured correctly.

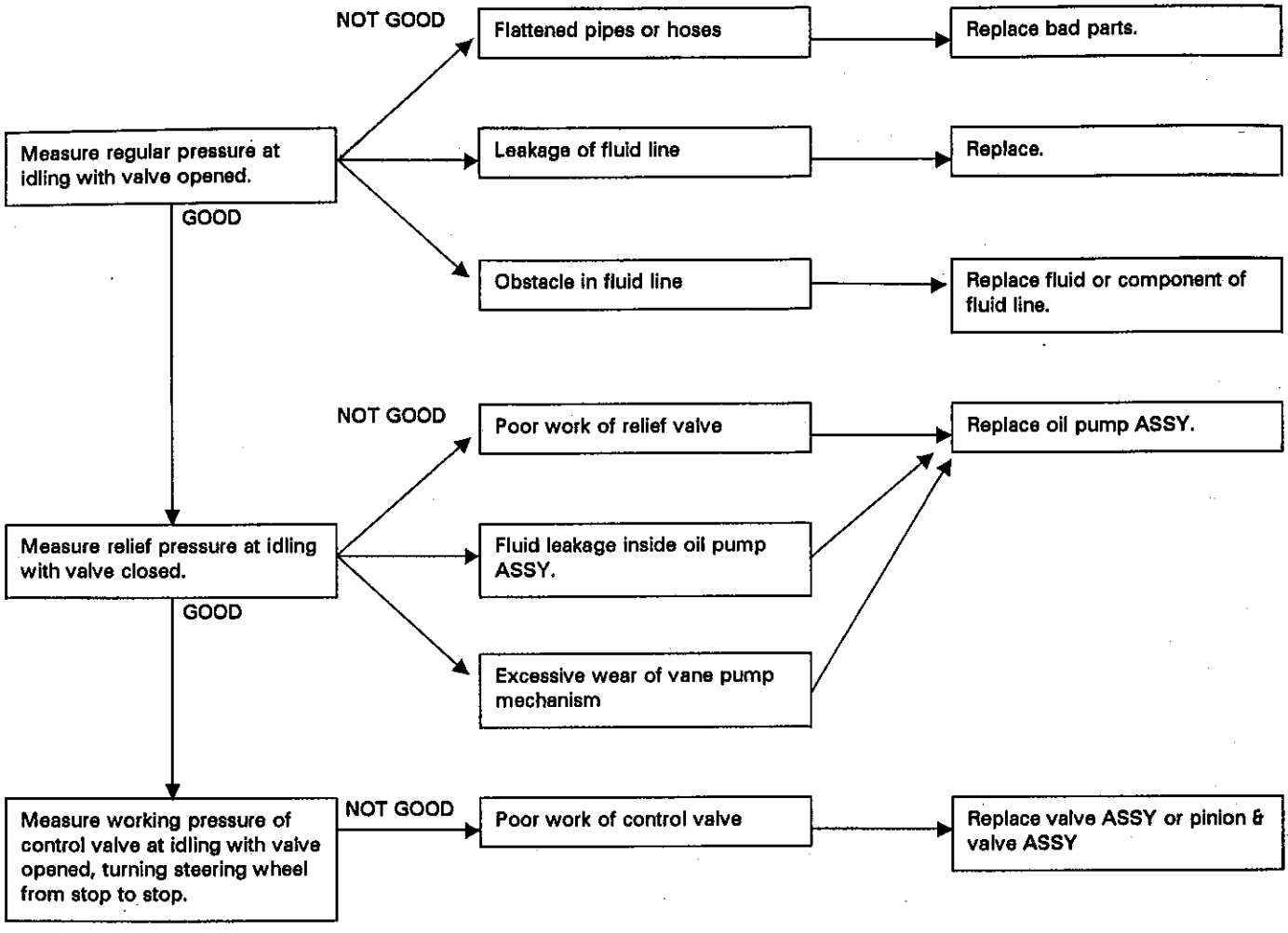

a. Do not leave the valve of pressure gauge closed or hold the steering wheel at stop end for 5 seconds or more in any case, as the oil pump may be damaged due to long keep of these conditions.
b. Put cotton cloth waste at a place where fluid drops before pressure gauge is installed. Wipe off split fluid thoroughly after the measurement.
c. Keep engine idling during the measurement.

Regular pressure:
981 kPa (10 kg/cm², 142 psi) or less

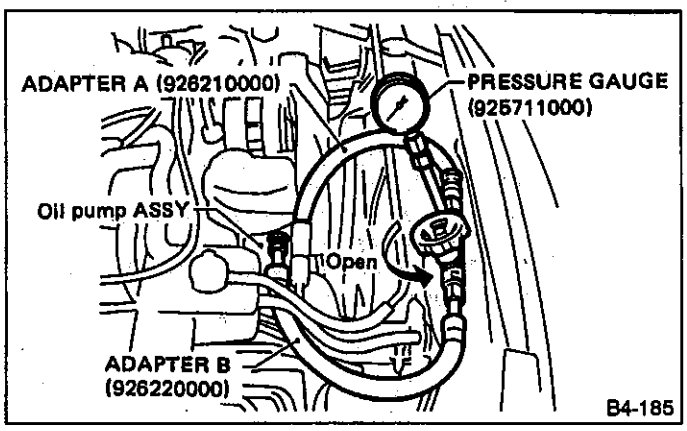

Fig. 131

Relief pressure:
7,355 — 7,846 kPa (75 — 80 kg/cm², 1,067 — 1,138 psi)

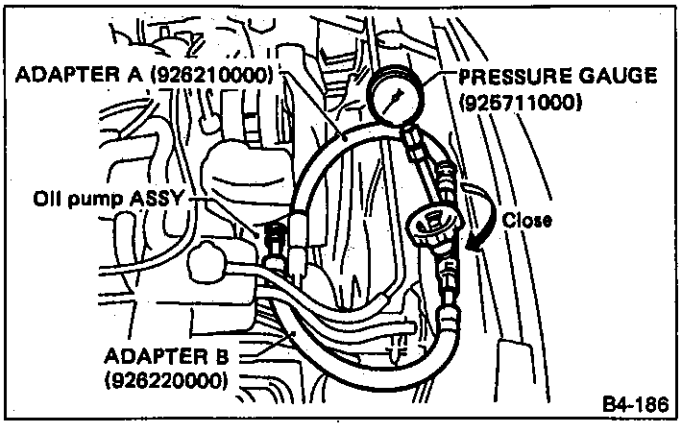

Fig. 132

3. MEASUREMENT OF STEERING EFFORT

*4

Measure steering efforts in stand still with engine idling on concrete road.
Result: 29.4 N (3.0 kg, 6.6 lb) or less in both direction

NOT GOOD → Adjust backlash.

GOOD ↓

Measure steering efforts in stand still with engine stalled on concrete road.
Result: 294.2 N (30.0 kg, 66.2 lb) or less in both direction

GOOD → Remove joint ASSY.

NOT GOOD ↓

Adjust back-lash.

Remove joint ASSY.

Measure steering wheel effort.
Result: Maximum force is 2.26 N (0.23 kg, 0.51 lb) or less in both direction.
Fluctuation width is 1.08 N (0.11 kg, 0.24 lb) or less.

NOT GOOD → Check, readjust, replace if necessary.

GOOD ↓

Measure folding torque of the joint ASSY.
Result: 5.49 N (0.56 kg, 1.23 lb) or less for long yoke.
8.43 N (0.86 kg, 1.90 lb) or less for short yoke.

NOT GOOD → Replace with a new one.

GOOD ↓

Check front wheels for unsteady revolution or rattling and brake for dragging.

NOT GOOD → Inspect, readjust, replace if necessary.

GOOD ↓

Remove tie-rod ends.

↓

(To be continued)

***4 When turning steering more quickly than necessary from a direction to the other direction at an engine speed over 2,000 rpm, steering effort may be heavy. This is caused by flow characteristic of oil pump and is no problem.**

Check tie-rod ends, tie-rods and ball joints of suspension for unsteady revolution or rattling.

NOT GOOD → Inspect, replace if necessary.

GOOD ↓

Measure rotating and sliding resistance of gearbox ASSY.
Result: Rotating resistance is 11.18 N (1.14 kg, 2.51 lb) or less around center position and 15.7 N (1.6 kg, 3.5 lb) or less in all positions within 20% difference between clockwise and counterclockwise.
Sliding resistance is 304 N (31 kg, 68 lb) or less with 20% difference between left and right directions.

NOT GOOD → Readjust backlash, if ineffective replace bad parts.

Measurement of steering effort

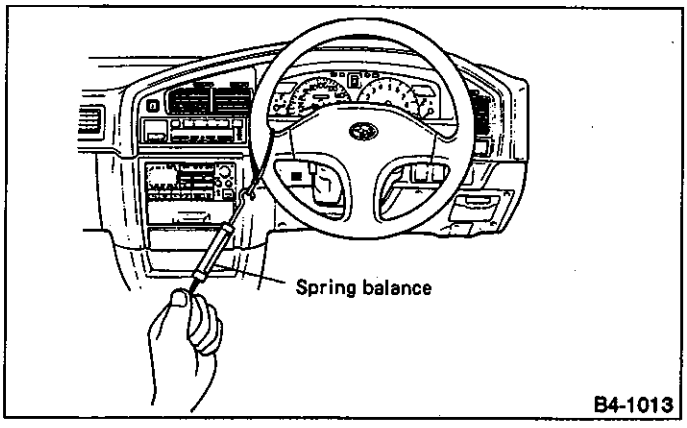

Fig. 133

Measurement of folding torque of joint assembly

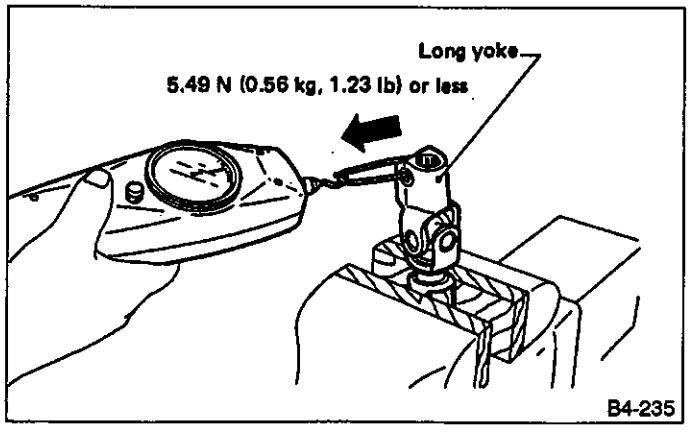

Fig. 134

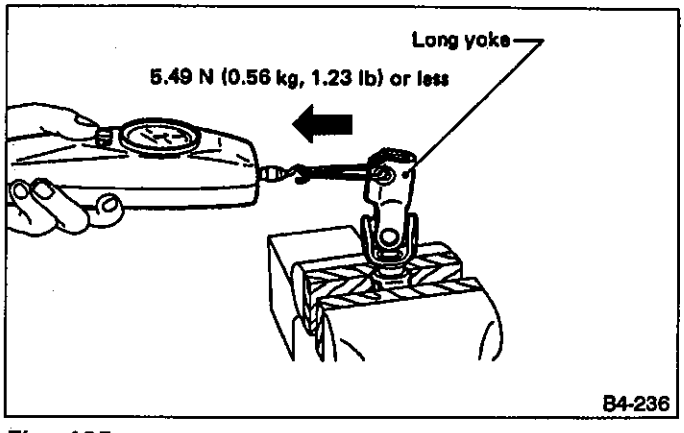

Fig. 135

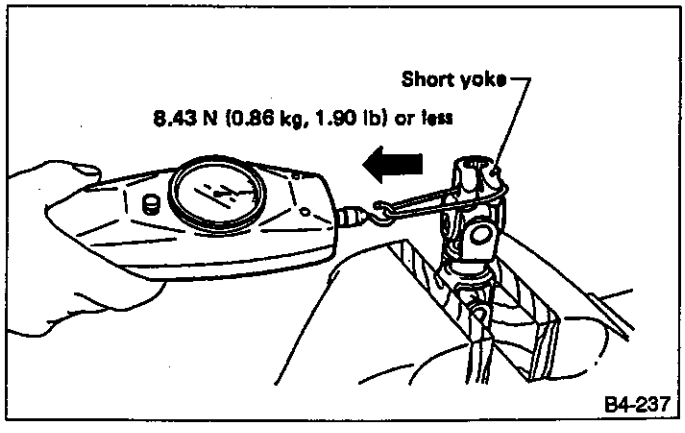

Fig. 136

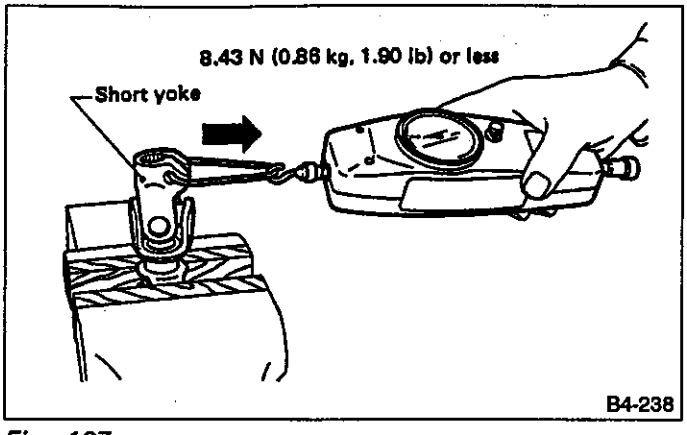

Fig. 137

Measurement of resistances of gearbox assembly

Rotating resistance:
Straight-ahead position within 30 mm (1.18 in) from rack center
Less than 11.18 N (1.14 kg, 2.51 lb)
Maximum allowable torque
15.7 N (1.6 kg, 3.5 lb)

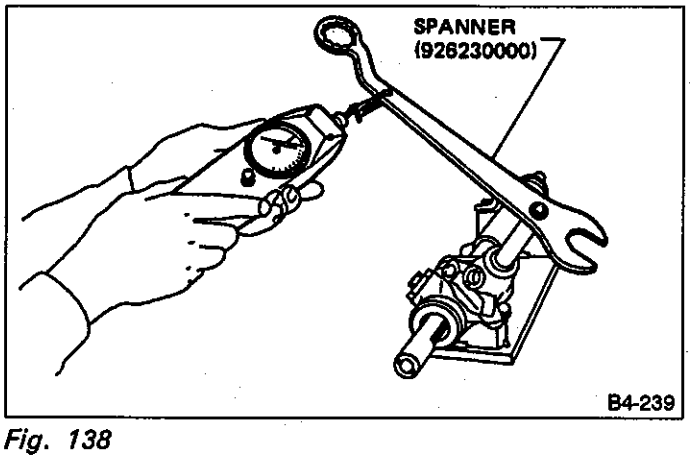

Fig. 138

Sliding resistance:
Right-turn steering
304 N (31 kg, 68 lb) or less
Left-turn steering
304 N (31 kg, 68 lb) or less

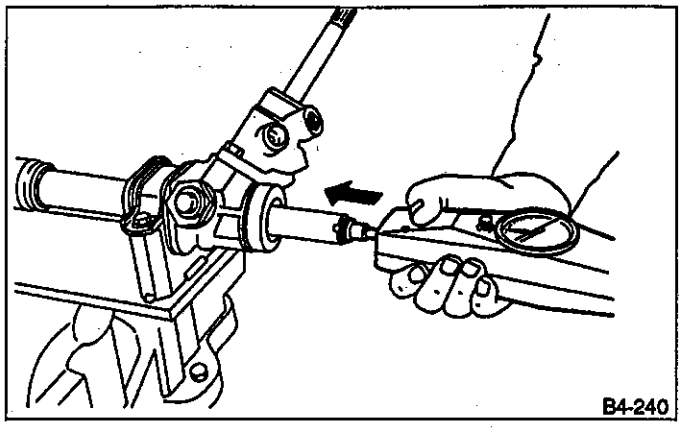

Fig. 139

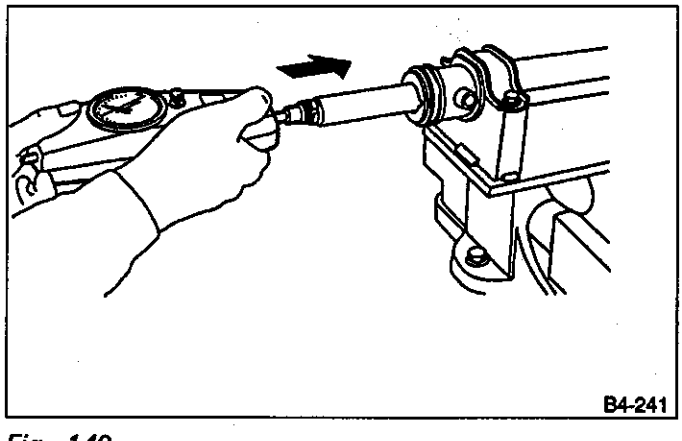

Fig. 140

4. FLUID LEAKAGE

It is likely that although one judges fluid leakage, there is actually no leakage. This is because the fluid spilt during the last maintenance was not completely wiped off. Be sure to wipe off spilt fluid thoroughly after maintenance.

Leaks at pipe and hose connections Locations ① — ⑨	Improper flare nut tightening, foreign matter, damaged flare nut	Loosen and tighten. If this does not correct problem, replace flare nut.
	Improper hose insertion or faulty clamp	Retighten or replace clamp.
	Faulty O-ring	If replacement of O-ring or pipe and hose does not correct problem, replace gearbox ASSY.
Leaks around hose Locations ⑩ and ⑪	Cracked or damaged hose	Replace with a new one.
	Cracked or damaged hose end fitting	
Leaks at or around cast portion of oil pump Location ⑫	Damaged gasket	Replace with a new one.
	Damaged oil seal	Replace with a new one.
Leaks at oil tank Location ⑬	Cracked oil tank	Replace with a new one.
	Damaged O-ring	Replace with a new one.
Leaks at filler neck Location ⑭	Damaged cap packing	Replace cap.
	Cracked filler neck	Replace oil pump ASSY.
	Fluid level too high	Reduce to specified level.

Severe operation of vehicle may cause fluid to ooze out at air vent in cap. However, this is not a problem.

Leaks around gearbox power cylinder Location ⑮	Damaged Y-packing	Replace with a new one.
Leaks at gearbox control valve Locations ⑯ and ⑰	Damaged Y-packing or oil seal	Replace faulty part(s).
	Damaged control valve	Replace control valve ASSY.

Wipe clean spilled fluid after servicing.

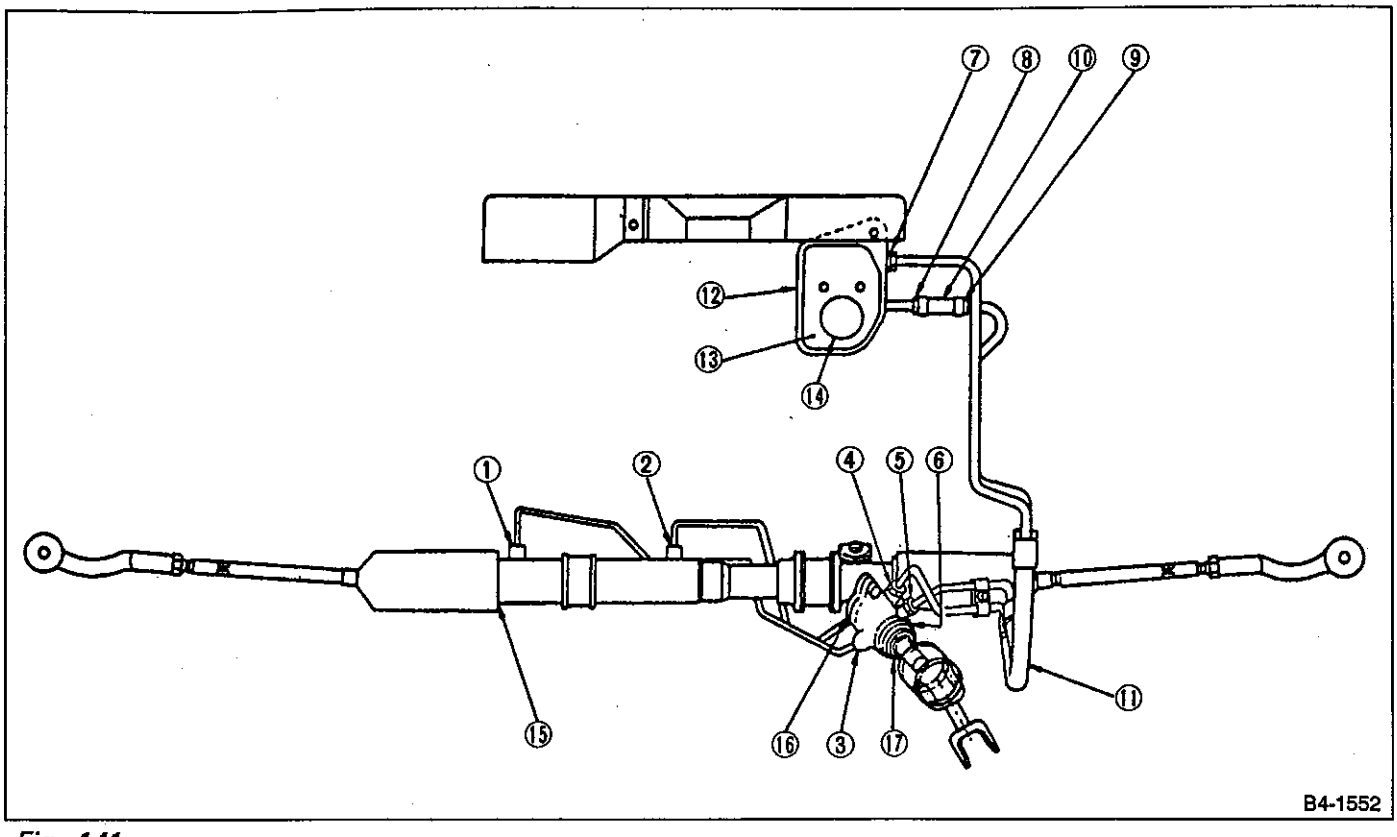

Fig. 141

5. NOISE AND VIBRATION

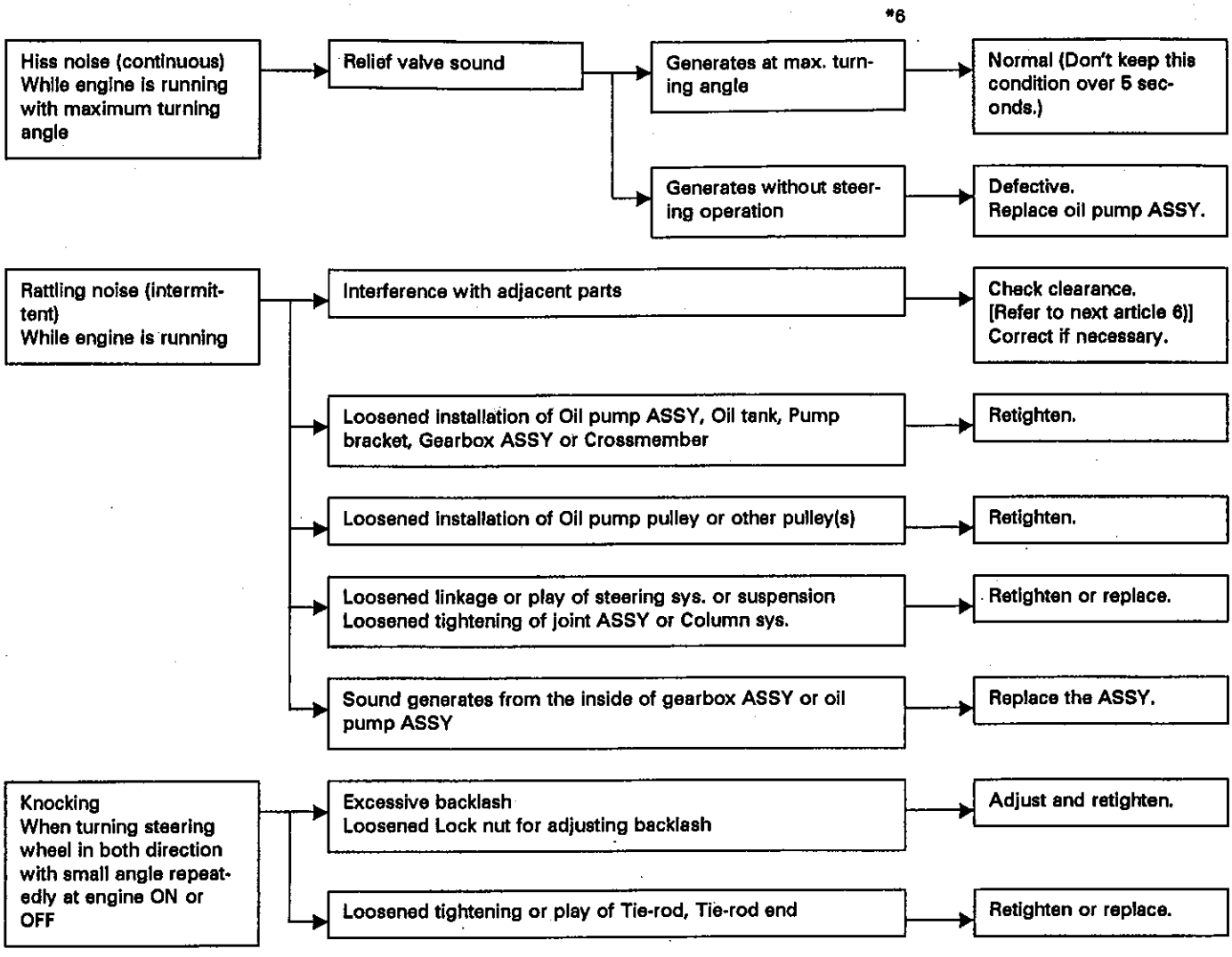

***6 Don't keep the relief valve operated over 5 sec. at any time or inner parts of the oil pump may be damaged due to rapid increase of fluid temperature.**

Grinding noise (continuous) While engine is running	Vane pump aeration *7	→	Inspect and retighten fluid line connection. Refill fluid and vent air.
	Vane pump seizing	→	Replace Oil pump ASSY.
	Pulley bearing seizing of Oil pump ASSY		
	Folded hose, flat pipe	→	Replace.
Squeal, squeak. (intermittent or continuous) While engine is running	Maladjustment of pulley belt Damaged or charged pulley belt Unequal length of pulley belts	→	Adjust or replace (Replace two belts as a set.)
	Run out or soilage of V-groove surface of Oil pump pulley	→	Clean or replace.
Sizzling noise (continuous) While engine is running	Fluid aeration	→	Fix wrong part causing aeration. Replace fluid and vent air.
	Damaged pipe of Gearbox ASSY	→	Replace pipe.
	Abnormal inside of hose or pipe. Flat hose or pipe	→	Rectify or replace.
	Abnormal inside of oil tank	→	Replace.
	Removed oil tank cap	→	Install cap.
Whistle (continuous) While engine is running	Abnormal pipe of Gearbox ASSY or abnormal inside of Hose	→	Replace Bad parts of Gearbox ASSY or Hose

***7 Grinding noise may be heard immediately after the engine start in extremely cold condition. In this case, if the noise goes off during warm up there is no abnormal function in the system. This is due to the fluid characteristic in extremely cold condition.**

Whine or growl (continuous or intermittent) While engine is running with/ without steering turned	Loosened installation of Oil pump ASSY, Oil pump bracket	Retighten.
	*8 Abnormal inside of Oil pump ASSY, Hose	Replace Oil pump ASSY, Hose, if the noise can be heard when running as well as stand still.
	Torque converter growl Air conditioner compression growl	Remove power steering pulley belt and confirm.
Creaking noise (intermittent) While engine is running with steering turned	Abnormal inside of Gearbox ASSY.	Replace bad parts of Gearbox ASSY
	Abnormal bearing for Steering shaft	Apply grease or replace.
	*9 Generates when turning steering wheel with brake (service or parking) applied	If the noise goes off when brake is released, normal.
*10 Vibration While engine is running with/ without steering turned	Tool low engine speed at start	Adjust and Instruct customers.
	Vane pump aeration	Fix wrong part. Vent air.
	Damaged valve in Oil pump ASSY, Gearbox ASSY	Replace Oil pump ASSY, bad parts of Gearbox ASSY.
	Looseness of play of Steering, Suspension parts	Retighten.

***8 Oil pump makes whine or growl noise slightly due to its mechanism. Even if the noise can be heard when steering wheel is turned at standstill there is no abnormal function in the system provided that the noise eliminates when the car is running.**

***9 When stopping with service brake and/or parking brake applied, power steering can be operated easily due to its light steering effort. If doing so, the disk rotates slightly and makes creaking noise. The noise is generated by creaking between the disk and pads. If the noise goes off when the brake is released, there is no abnormal function in the system.**

***10 There may be a little vibration around the steering devices when turning steering wheel at standstill, even though the component parts are properly adjusted and have no defects.**
Hydraulic systems are likely to generate this kind of vibration as well as working noise and fluid noise because of combined conditions, i.e.,
Road surface and tire surface, Engine speed and turning speed of steering wheel, Fluid temperature and braking condition.
This phenomena does not indicate there is some abnormal function in the system.
The vibration can be known when steering wheel is turned repeatedly at various speeds from slow to rapid step by step with parking brake applied on concrete road and in "D" range for automatic transmission vehicle.

6. CLEARANCE TABLE

This table lists various clearances that must be correctly adjusted to ensure normal vehicle driving without interfering noise, or any other faults.

No.	Location	Minimum clearance mm (in)	No.	Location	Minimum clearance mm (in)
①	Pipe-to-pipe clearance of crossmember and hose ASSY and pipe-to-pipe clearance of hose ASSY	5 (0.20)	⑦	Exhaust pipe-to-gearbox boot clearance	18 (0.71)
②	DOJ-to-shaft and DOJ-to-joint clearances	14 (0.55)	⑧	Side frame-to-hose clearance	15 (0.59)
③	DOJ-to-valve housing clearance	11 (0.43)	⑨	Blow-by hose-to-hose clearance	5 (0.20)
④	Pipe-to-pipe and pipe-to-cross-member clearance	2 (0.08)	⑩	Master cylinder-to-hose clearance	20 (0.79)
⑤	Stabilizer-to-power steering feed pipe clearance	5 (0.20)	⑪	Cruise control pump-to-hose clearance	12 (0.47)
⑥	Exhaust pipe-to-power steering feed pipe clearance	15 (0.59)			

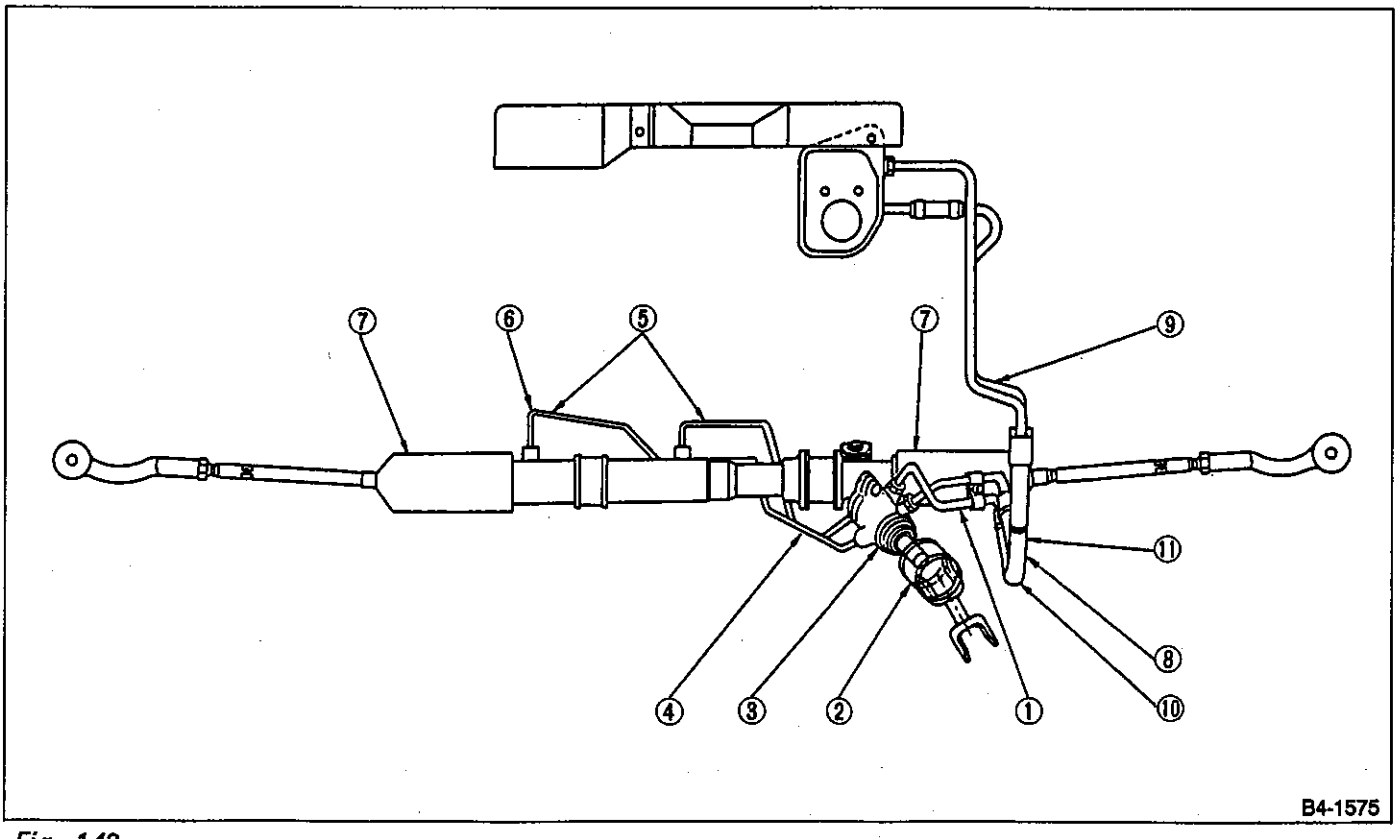

Fig. 142

7. BREAKAGE OF HOSES

Pressure hose burst	Excessive holding time of relief status	Instruct customers.
	Malfunction of relief valve	Replace Oil pump ASSY.
	Poor cold characteristic of fluid	Replace fluid.
Forced out Return hose	Poor connection	Correct.
	Poor holding of clip	Retighten.
	Poor cold characteristic of fluid	Replace fluid.
Fluid bleeding out of hose slightly	Wrong layout, tensioned	Replace hose.
	Excessive play of engine due to deterioration of engine mounting rubber	Replace defective parts.
	Improper stop position of pitching stopper	Replace defective parts
Crack on hose *11	Excessive holding time of relief status	Replace Instruct customer.
	Excessive tightening torque for return hose clip	Replace
	Power steering fluid, brake fluid, engine oil, electrolyte adhere on the hose surface	Replace Pay attention on service work.
	Too many times use in extremely cold weather	Replace Instruct customers.

***11 Although surface layer materials of rubber hoses have excellent weathering resistance, heat resistance and resistance for low temperature brittleness, they are likely to be damaged chemically by brake fluid, battery electrolyte, engine oil and automatic transmission fluid and their service lives are to be very shortened. It is very important to keep the hoses free from before-mentioned fluids and to wipe out immediately when the hoses are adhered with the fluids.**
Since resistances for heat or low temperature brittleness are gradually declining according to time accumulation of hot or cold conditions for the hoses and their service lives are shortening accordingly, it is necessary to perform careful inspection frequently when the car is used in hot weather areas, cold weather area and/or a driving condition in which many steering operations are required in short time. Particularly continuous work of relief valve over 5 seconds causes to reduce service lives of the hoses, the oil pump ASSY, the fluid, etc. due to over heat.
So, avoid to keep this kind of condition when servicing as well as driving.

SUBARU®

1992

SERVICE MANUAL

		Page
M	MECHANISM AND FUNCTION	2
	1. Disc Brake	2
	2. Rear Drum Brake	3
	3. Master Cylinder	4
	4. Brake Booster	5
	5. Proportioning Valve	9
	6. Proportioning Valve (models equipped with ABS)	11
	7. Hill-Holder	12
	8. Anti-lock Brake System	15
	9. Parking Brake (Rear Disc Brake)	27
	10. Parking Brake (Rear Drum Brake)	29
S	SPECIFICATIONS AND SERVICE DATA	30
C	COMPONENT PARTS	35
W	SERVICE PROCEDURE	44
	1. Front Disc Brake	44
	2. Rear Disc Brake	52
	3. Rear Drum Brake	57
	4. Parking Brake (Rear Disc Brake)	62
	5. Master Cylinder	65
	6. Brake Booster	66
	7. Brake Hose	69
	8. Hill-Holder	70
	9. Parking Brake Lever	71
	10. Parking Brake Cable	72
	11. Air Bleeding	73
	12. Brake Fluid Replacement	74
	13. Proportioning Valve	75
	14. ABS Sensor	76
	15. Hydraulic Unit for ABS System	80
	16. Electronic Control Unit for ABS System	83
	17. G Sensor for ABS System	84
	18. Brake Hose and Pipe	85
T	TROUBLESHOOTING	86
	1. Entire Brake System	86
	2. Hill-Holder	88
	3. Troubleshooting for ABS	90
	4. ABS Control Unit I/O Signal	94
	5. Diagram of ABS	96
	6. Troubleshooting Chart with Trouble Code	98
	7. General Troubleshooting Chart	112

M MECHANISM AND FUNCTION

1. Disc Brake

A: OUTLINE

The front brakes are ventilated disc types which feature high heat dissipation and superb braking stability. In addition, the front brake quickly restores the original braking performance even when wet.
The brake disc, which is externally mounted, is secured together with the disc wheel using the hub bolts, to facilitate removal or installation when servicing the vehicle.
The outer brake pad is provided with an indicator which indicates pad wear limits.

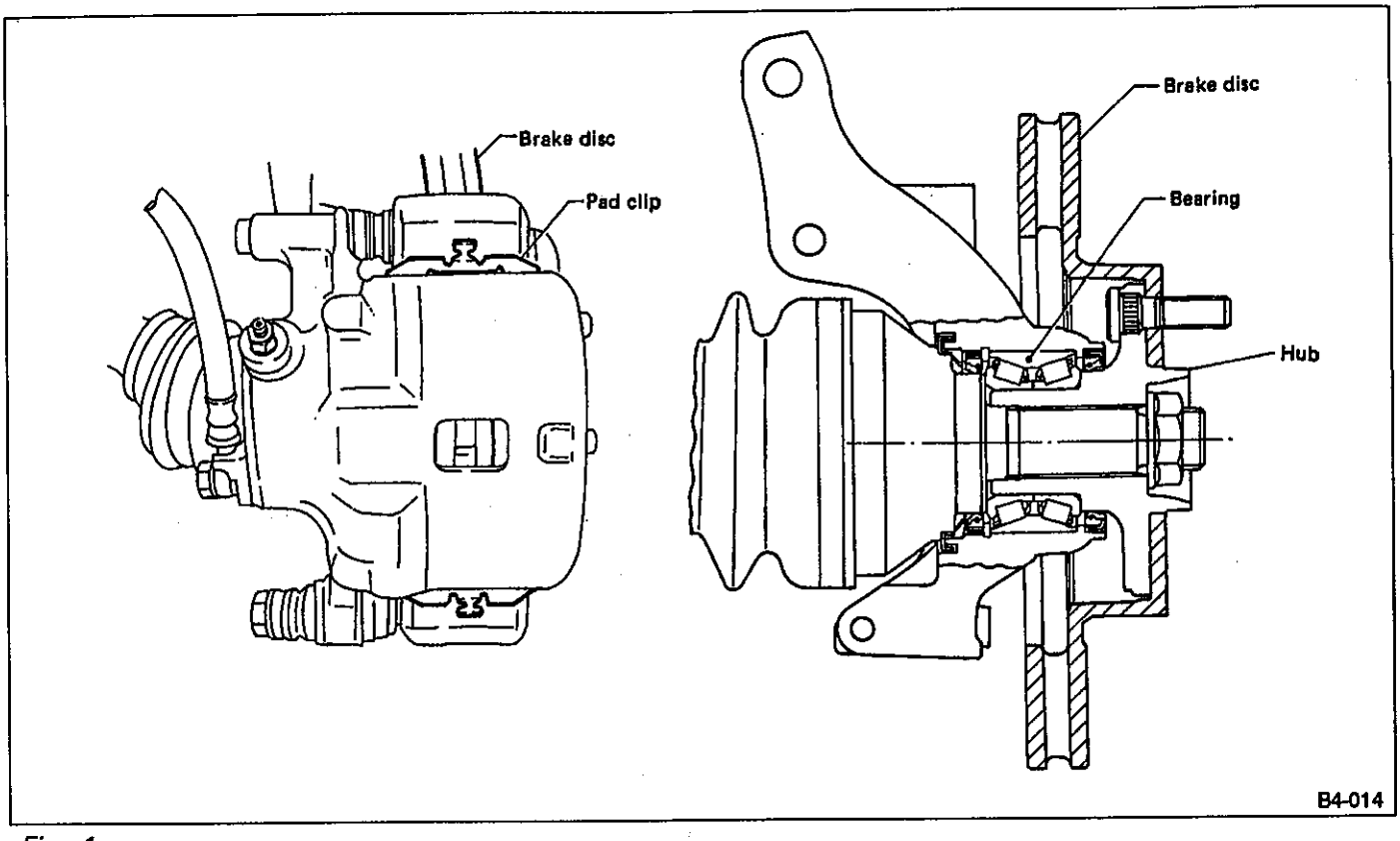

Fig. 1

B: DESCRIPTION OF BRAKE PADS

1. PAD WEAR INDICATOR

A wear indicator is provided on the outer disc brake pads. When the pad wears down to 1.5 mm (0.059 in) the tip of the wear indicator comes into contact with the disc rotor, and makes a squeaking sound as the wheel rotates.
This indicates that the pad needs to be replaced.

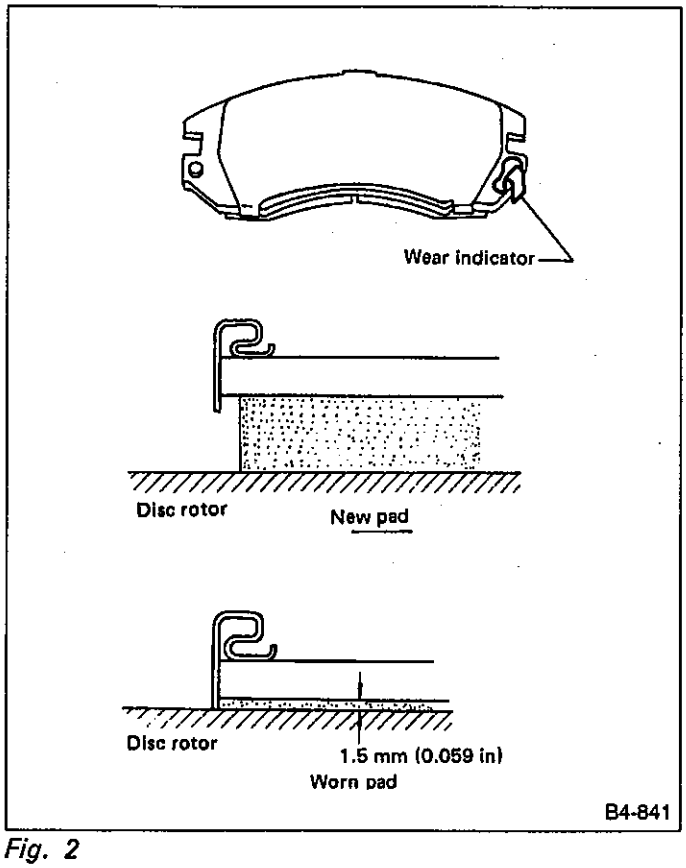

Fig. 2

2. FRICTIONAL MATERIAL OF BRAKE PADS

Frictional brake pad materials do not contain asbestos and are not harmful.

2. Rear Drum Brake

A: GENERAL

The drum brake is a leading-trailing type. When fluid pressure is applied to the wheel cylinder, the piston moves to expand the leading and trailing shoes while the lower shoe return spring joint acts as a pivot. Thus, the shoes come in contact with the inner surface of the drum, producing braking action.

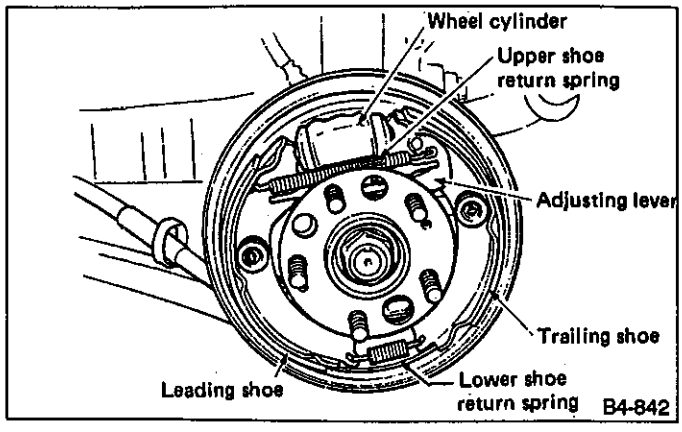

Fig. 3

When brakes are applied during the forward movement, the tip of the brake leading shoe lining is pressed against the inner surface of the drum so as to oppose the drum direction. This increases the braking force. The trailing shoe, however, undergoes a force that pushes back so that braking force applied to the trailing shoe decreases.
The above shoe operation is reversed while the vehicle is backing up, with the braking force exerted on the trailing shoe greater than that on the leading shoe. It follows that there is no difference in braking force between the directions in which the vehicle moves.

B: OPERATION

1. AUTOMATIC ADJUSTER

The brake lining-to-drum clearance is automatically compensated for by the automatic adjuster. When the brake shoe is contracting after expansion, the adjuster lever rotates the adjuster ASSY's screw to lengthen adjuster ASSY so that the clearance is maintained at the specified value.

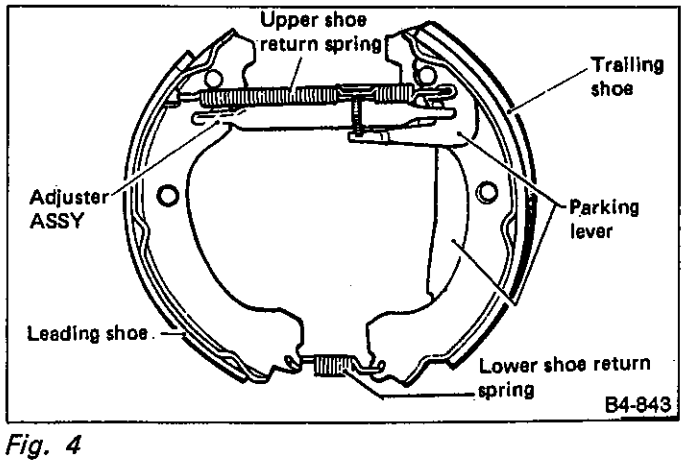

Fig. 4

3. Master Cylinder

A: FUNCTION

1) A sealed reservoir tank is adopted to extend the service life of the brake fluid.
2) The fluid level indicator is built into the reservoir tank for easy and correct monitoring of the fluid level when adding brake fluid.

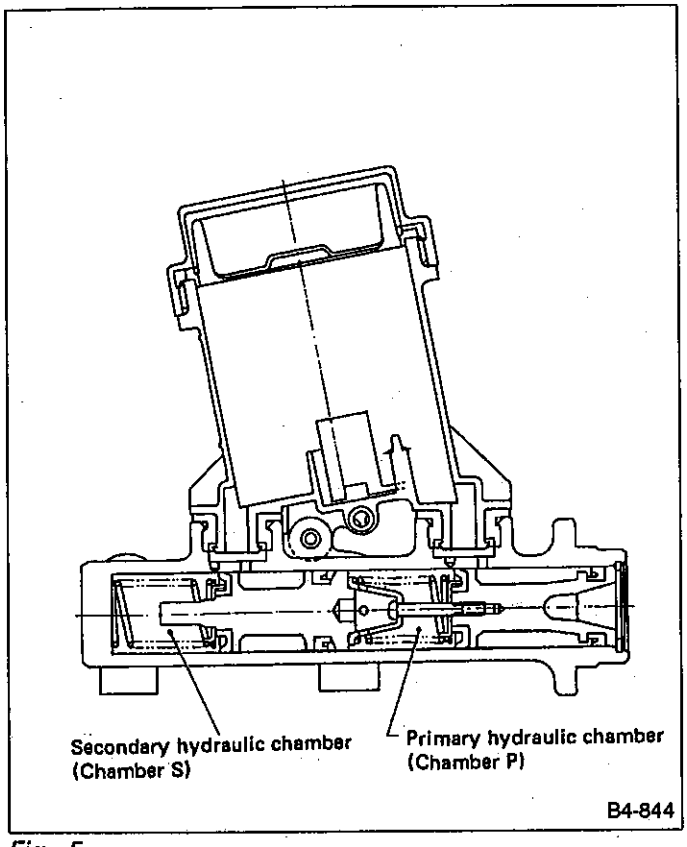

Fig. 5

1. BRAKE FLUID LEVEL INDICATOR

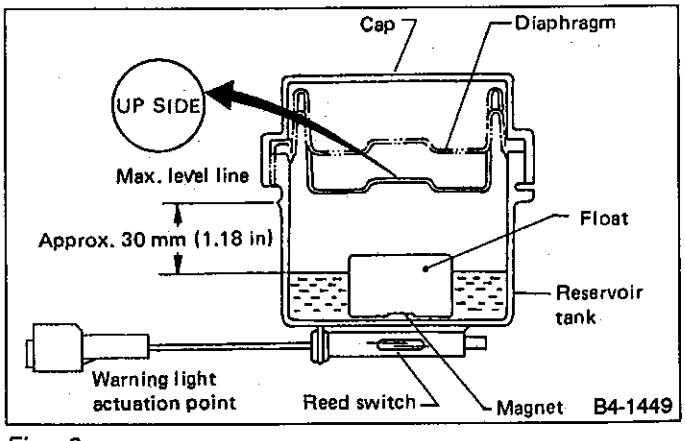

Fig. 6

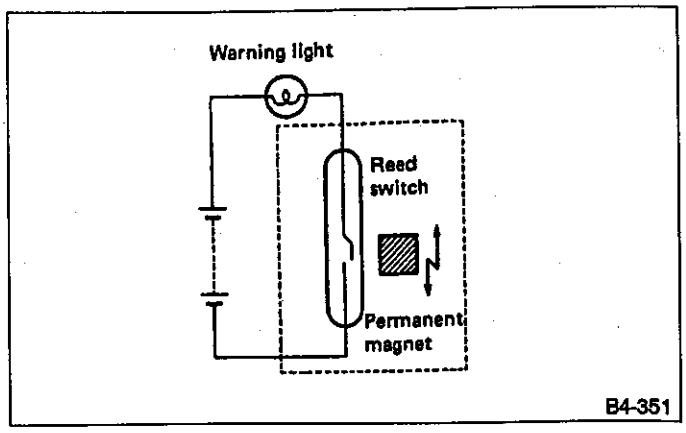

Fig. 7

Under normal conditions, the float remains above the reed switch, and the magnetic force from the permanent magnet in the float is unable to activate it. Therefore, the circuit is kept open, and the warning light remains off. The float lowers as the brake fluid level lowers, and if it falls below the specified fluid level [approx. 30 mm (1.18 in) below the MAX level line], the reed switch will be activated by the permanent magnet, closing the circuit. In this event, the warning light comes on and warns the driver of a reduction of the brake fluid level.
However, the lamp may be lighted momentarily even when the brake fluid surface is still above the specified level, if the vehicle body tilts or swings largely.

4. Brake Booster

A: GENERAL

The brake booster is a tandem type that utilizes two small diameter diaphragms to provide high brake boosting effects.

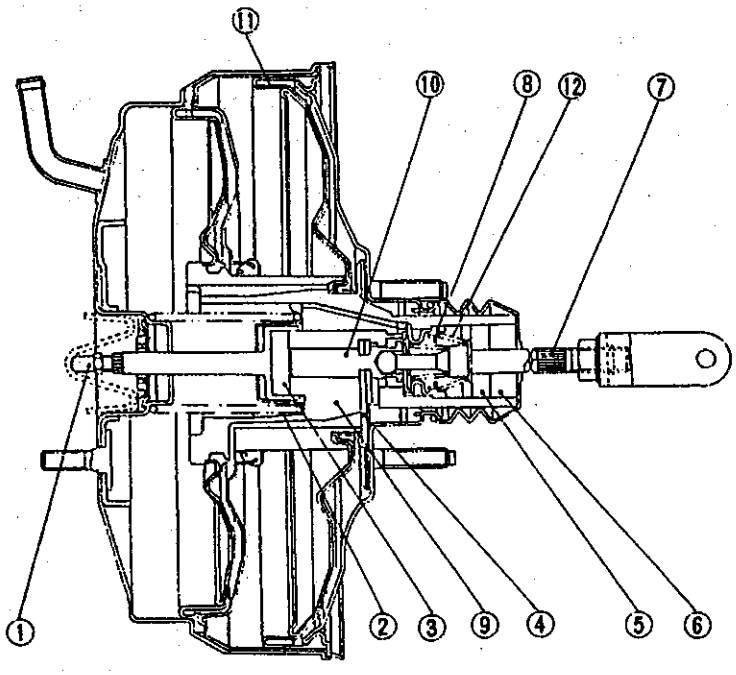

1 Push rod
2 Return spring
3 Reaction disc
4 Key
5 Filter
6 Silencer
7 Operating rod
8 Poppet valve
9 Valve body
10 Plunger valve
11 Diaphragm plate
12 Valve return spring

B4-1328

Fig. 8

B: OPERATION

1. BRAKE BOOSTER "OFF"

The plunger valve comes in contact with the poppet valve so that atmospheric air passing through the filter and silencer is shut out by the atmospheric valve (of the poppet valve).
The plunger valve is moved to the key at the right by the return spring so that the poppet valve is held at the right. Since the vacuum valve of the valve body and the poppet valve are kept away from each other, passage A is linked with passage B and the constant-pressure chamber is also linked with the variable-pressure chamber. At this point, pressure differential does not occur between the two chambers; the diaphragm plate is moved back to the right by return spring tension.

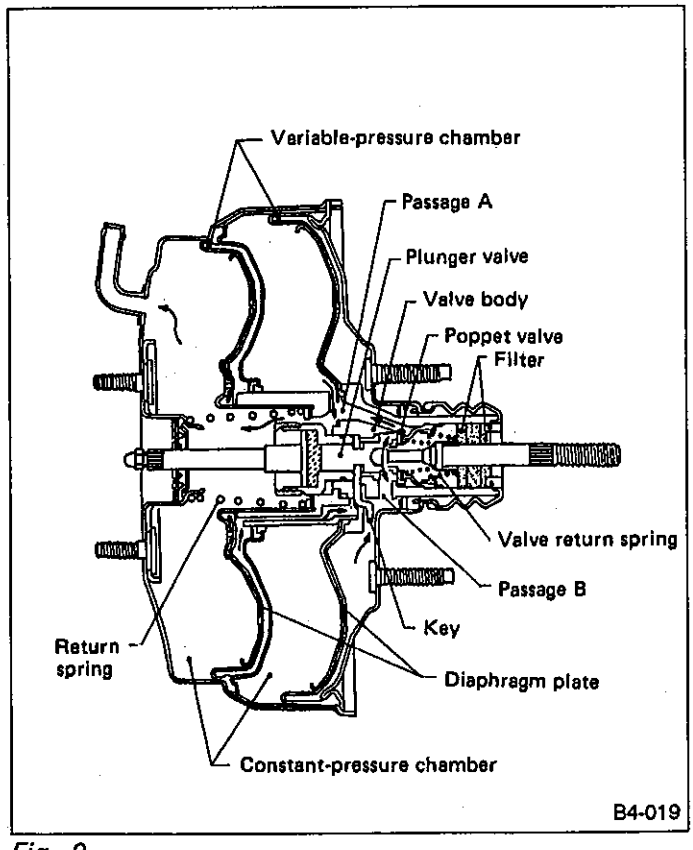

Fig. 9

2. BRAKE BOOSTER "ON"

When the brake pedal is depressed, the operating rod pushes the plunger valve so that the poppet valve comes in contact with the vacuum valve of the valve body. This shuts off the circuit between passages A and B, as well as the circuit between the constant- and variable-pressure chambers.
Further movement of the plunger valve moves the atmospheric valve away from it so that atmospheric air is directed to the variable-pressure chamber via passage B. This produces a pressure differential between the constant- and variable-pressure chambers.
As a result, the diaphragm and its plate are moved to the left as a single unit.
The power applied to the diaphragm plate by the pressure differential is then transmitted to the reaction disc via a hub, as well as to the push rod, and produces a booster output.

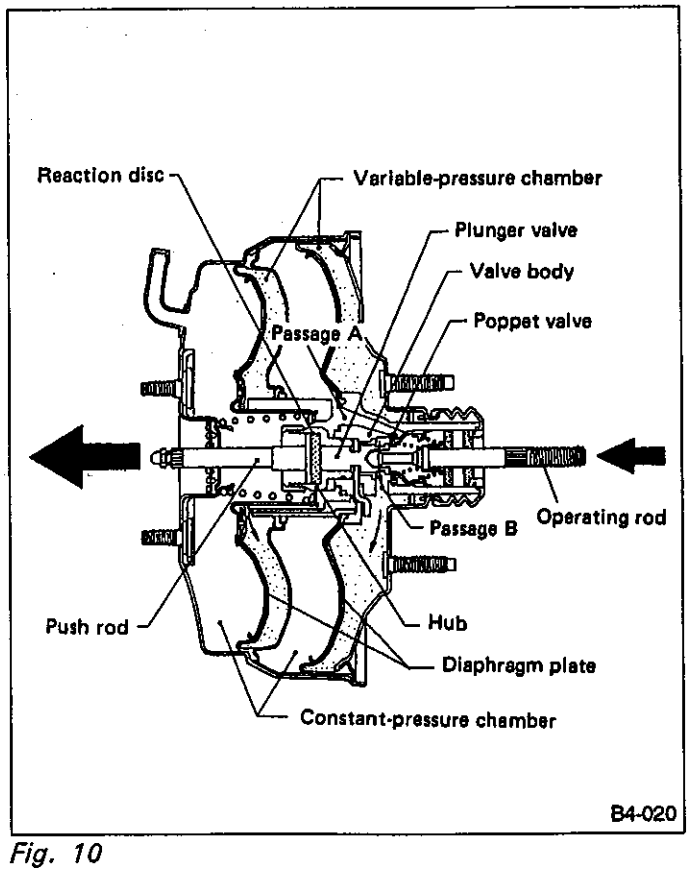

Fig. 10

3. BRAKE BOOSTER UNDER MEDIUM LOAD

The poppet valve comes in contact with the plunger valve and valve body when a force pushes the center of the reaction disc (at the contact portion of the plunger valve) via the operating rod and plunger valve. This occurs when brake pedal depression is balanced with a force pushing the plunger valve (via the push rod and reaction disc) due to the reaction force of oil pressure delivered from the master cylinder.
As a result, pressure differential is maintained between the constant-pressure chamber and variable-pressure chamber unless the pedal depression force is changed.

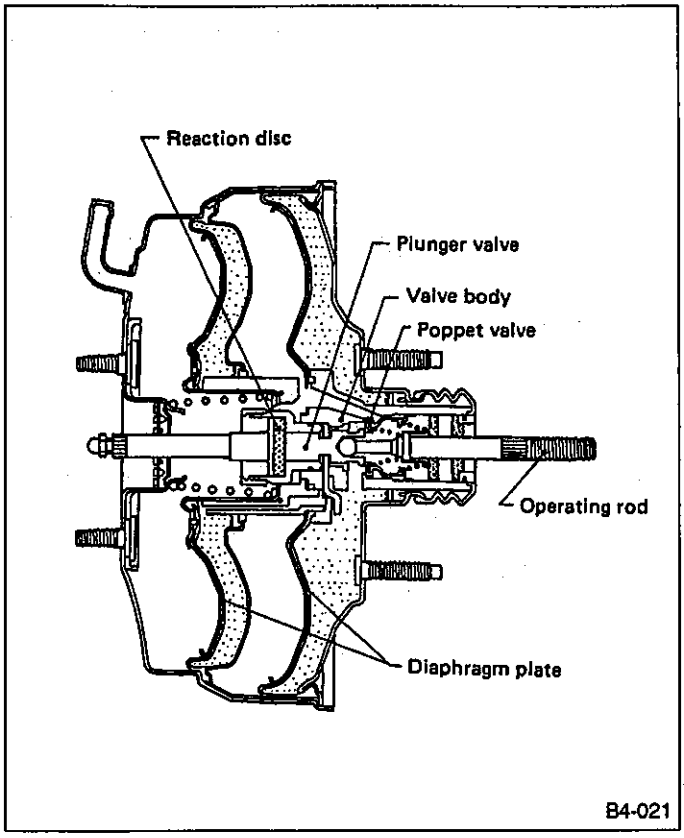

Fig. 11

4. BRAKE BOOSTER UNDER FULL-LOAD CONDITIONS

When pedal depression increases to such an extent that the variable-pressure chamber is maintained at atmospheric pressure, the maximum pressure differential acts on the diaphragm plate.
Further pedal depression does not act on the diaphragm plate but rather on the push rod.

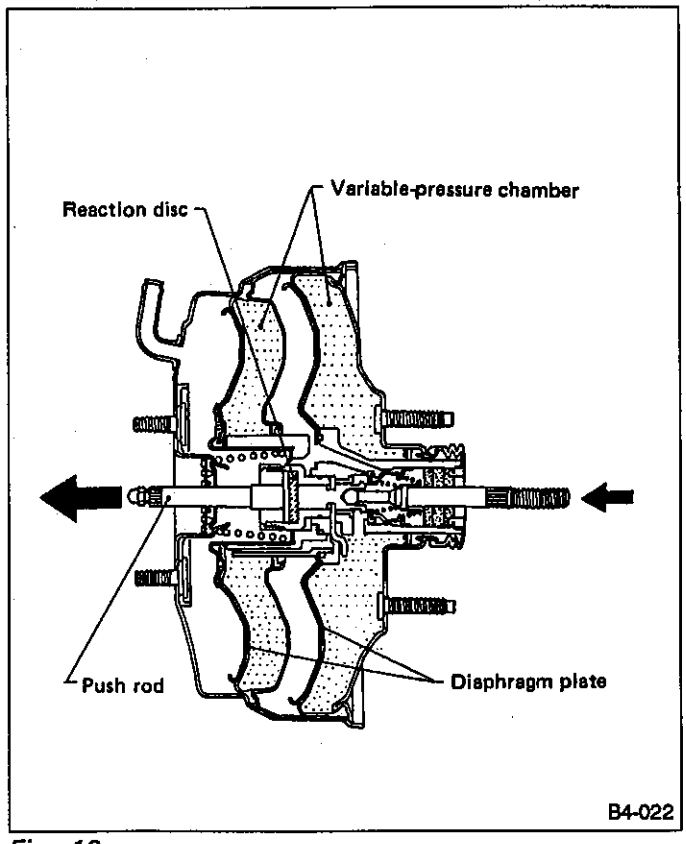

Fig. 12

5. BRAKE BOOSTER RELEASED

When the force of brake pedal depression decreases, the forces acting on the reaction disc and plunger valve are unbalanced, so that the plunger valve is moved to the right.
The plunger valve then comes in contact with the atmospheric valve of the poppet valve to shut off the passage between the variable-pressure chamber and atmospheric air and, at the same time, moves the poppet valve back. Movement of the poppet valve opens the vacuum valve so that passages A and B are linked with each other.
Air from the variable-pressure chamber is then delivered to the constant-pressure chamber. This eliminates any pressure differential between the two chambers. As a result, the diaphragm plate is pushed back to the "release" position by the return spring.

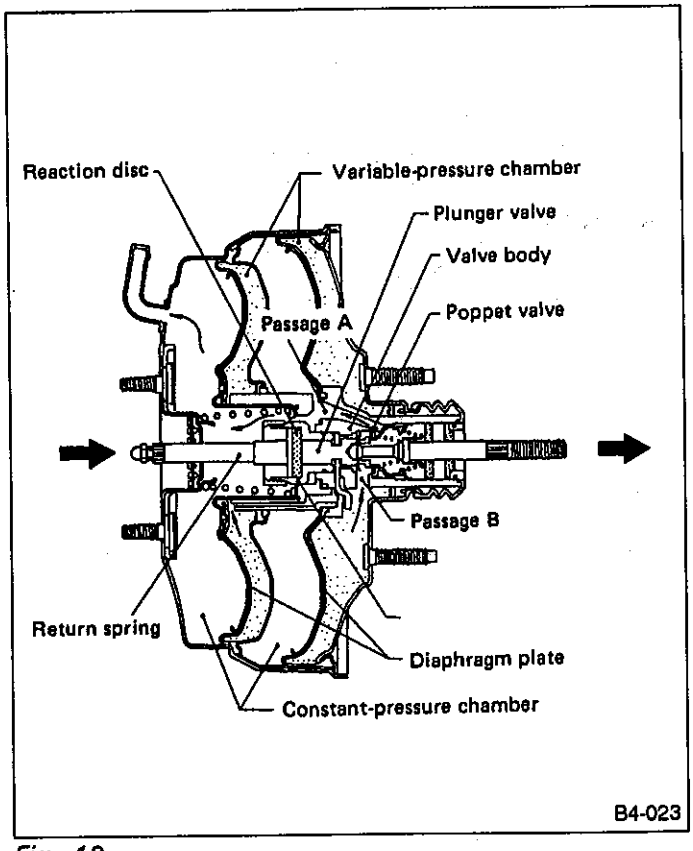

Fig. 13

6. BRAKE BOOSTER WITH NO VACUUM

When the brake pedal is depressed while the constant- and variable-pressure chambers are held at atmospheric pressure, the operating rod moves to the left. This moves the plunger valve which in turn pushes the hub via the key.
The reaction disc (which is built into the hub) then moves the master cylinder piston via the push rod. At this point a boosting force does not occur, but oil pressure is produced by movement of the master cylinder piston. As a result, the system serves as a hydraulic brake.

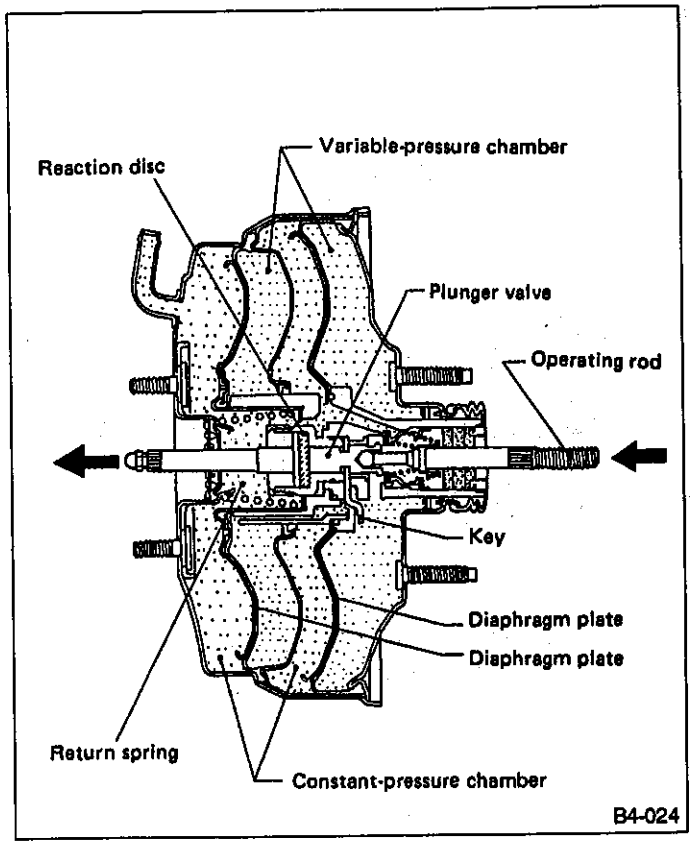

Fig. 14

5. Proportioning Valve

A: GENERAL

The proportioning valve for dual piping systems is adopted for controlling the braking force.

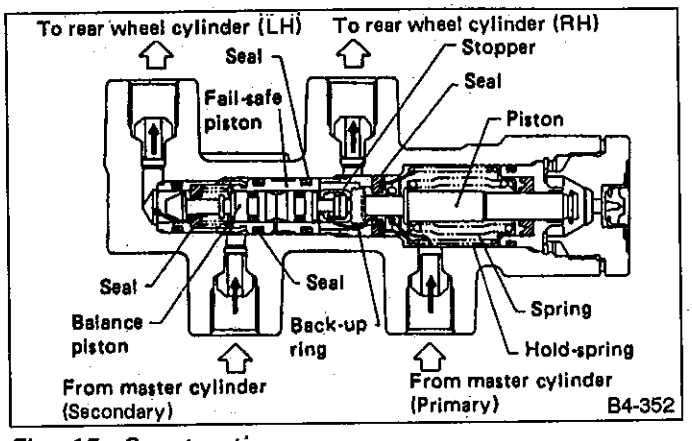

Fig. 15 Construction

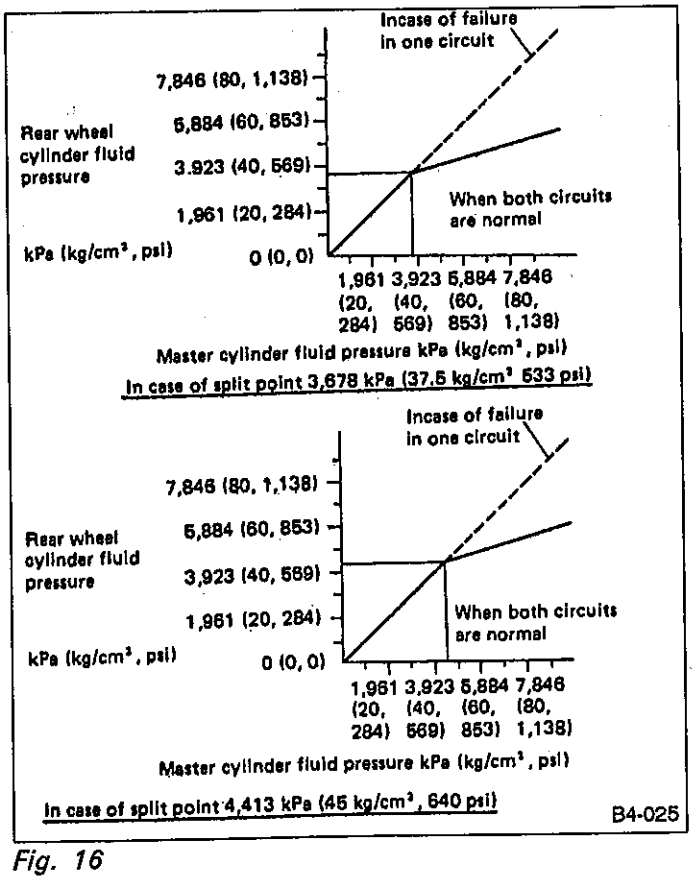

Fig. 16

B: OPERATION

1. OPERATION DURING NORMAL CONDITIONS

When the fluid pressure in the master cylinder is low (the fluid pressure before the split point), the piston is pressed by the spring load and the valve remains inoperative. As a result, the fluid pressure in the master cylinder is held equal to the fluid pressure in the rear wheel cylinder.

1) When the master cylinder fluid pressure rises, the piston in the primary circuit is moved rightward against the spring load, and brought into contact with the seal (1) (as shown in the figure). The master cylinder fluid pressure chamber (chamber A) is therefore cut off from the rear wheel cylinder fluid pressure chamber (chamber B), and the fluid pressure to the rear wheel cylinder is thus controlled. (The pressure at this moment is the split point pressure.)

If the fluid pressure in chamber A rises further, the piston is moved leftward, off the seal (1), and this causes the fluid pressure in chamber B to rise. The piston is then moved rightward, and brought into contact with the seal (1) again. After this, the piston repeats this contact with the seal (1) in this way, thereby controlling the fluid pressure in the rear wheel cylinder.

2) When the fluid pressure in chamber B is controlled in the secondary circuit, the balance piston is moved rightward by the fluid pressure difference between chamber B and chamber C, and brought into contact with the seal (2), and the fluid pressure in chamber D is controlled. Since sectional areas A1 and A2 are equal, the balance piston is pushed by equal forces from the right and left. If the fluid pressure rises in chamber B, the balance piston performs control to equalize the fluid pressure in chamber D and chamber B by repeating open-close operation with the seal (2).

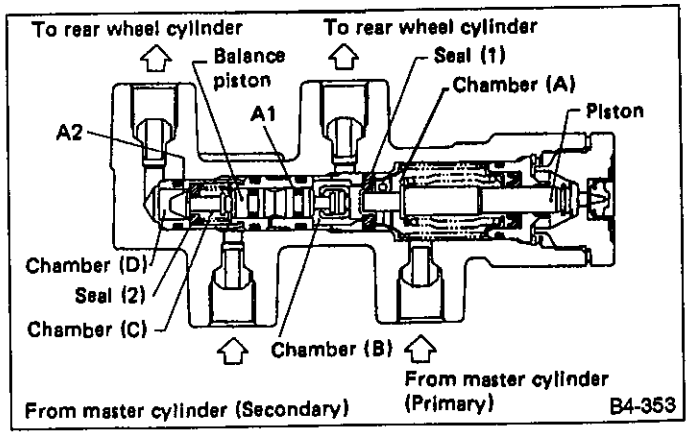

Fig. 17

2. OPERATION IN CASE OF CIRCUIT FAILURE

1) Failure of primary circuit

If the primary circuit fails, the fail-safe piston and balance piston are moved rightward by the fluid pressure in the master cylinder in the secondary circuit until the piston contacts the plug. In this case, the balance piston remains off the seal (2), and no split point is created in the graph. That is, the fluid pressure in the secondary side rear wheel cylinder is equal to the fluid pressure in the master cylinder.

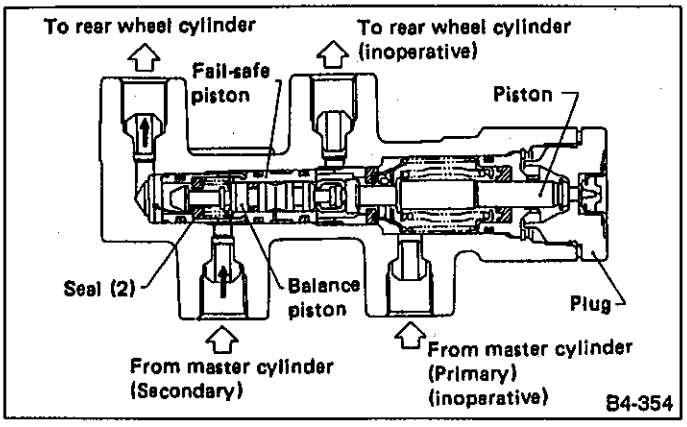

Fig. 18

2) Failure of secondary circuit

If the secondary circuit fails, the balance piston is moved leftward by the fluid pressure in chamber B until the end of the piston contacts the stopper. Since sectional area A1 is greater than A2, the piston remains unmoved even after the master cylinder fluid pressure has reached the split point, and the piston is kept off the seal (1). Hence, no split point is created in the graph, and the rear wheel cylinder fluid pressure of the primary circuit is kept equal to the master cylinder fluid pressure.

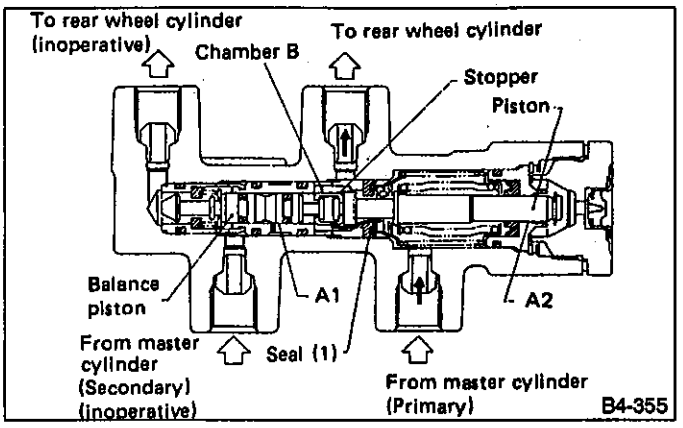

Fig. 19

6. Proportioning Valve (models equipped with ABS)

A: OPERATION

1. OPERATION DURING NORMAL CONDITIONS

1) Operation before the split point
Piston ① is held by spring ④ so that valve ③ is kept away from valve seat ②.
Under this condition, fluid pressure "P_3" to rear wheel cylinders equals fluid pressure "P_2" from master cylinder.

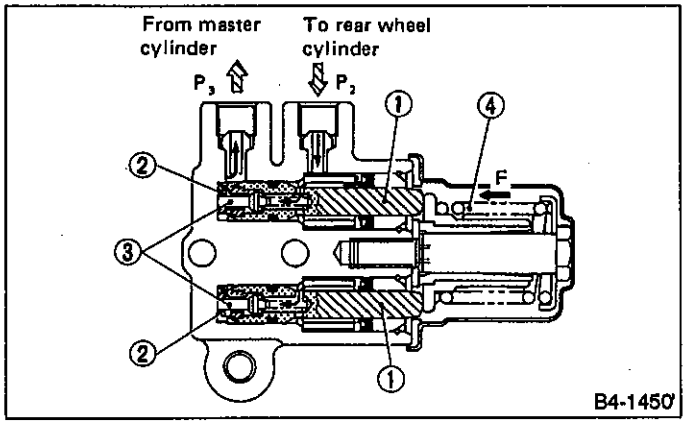

Fig. 20

2) Operation near the split point
Force "f_1", applied to piston ① by spring ④, is one-half of spring force "F". In other words, "f_1" = 1/2 "F"].
Force "f_2" is also applied to piston ① in the direction opposite to spring force "F" due to fluid pressure "P_2" generated by master cylinder according to cross sectional area "A".
Spring force "f_2" increases respondingly with fluid pressure "P_2". When "f_2" is greater than "f_1", piston ① moves in direction opposite to spring force "F". This causes valve ② to come in contact with valve seat ③, blocking fluid passage.

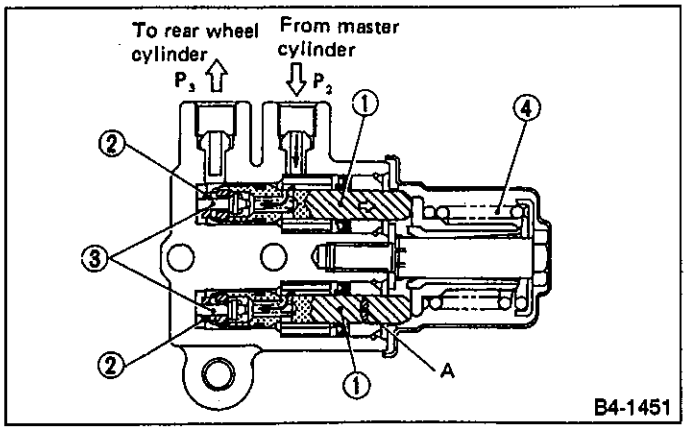

Fig. 21

3) Immediately before fluid passage is closed, fluid pressure "P_2" is held equal to pressure "P_3". When brake pedal is depressed to increase fluid pressure "P_2", piston ① moves in the same direction as spring force "F", opening fluid passage.
However, since fluid passage is closed again immediately after pressure "P_2" equals "P_3", pressure "P_3" is held at a value of less than pressure "P_2".

2. OPERATION IN CASE OF CIRCUIT FAILURE

If either primary or secondary circuit fails to operate, spring force "F" is supported by one of pistons ①. At this point, fluid pressure "P_2", which initially reaches the split point, is greater than that produced under normal conditions.

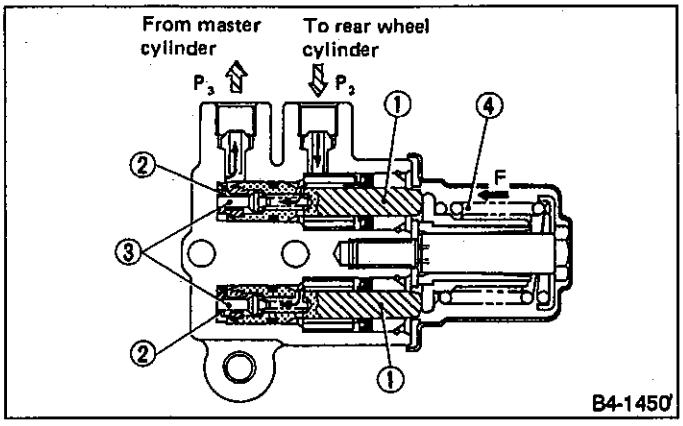

Fig. 22

7. Hill-Holder

A: OUTLINE

The hill-holder is a device to make starting on an uphill road easier and permits even a driver not yet familiarized with starting by use of the parking brake to start the vehicle smoothly.

When pressing down the clutch pedal with the brake pedal depressed in order to start the vehicle on an uphill road, this device holds the brake temporarily upon taking your foot off the brake pedal (until the clutch pedal is released). Therefore, smooth starting is enabled by usual engagement of the clutch while depressing the accelerator pedal.

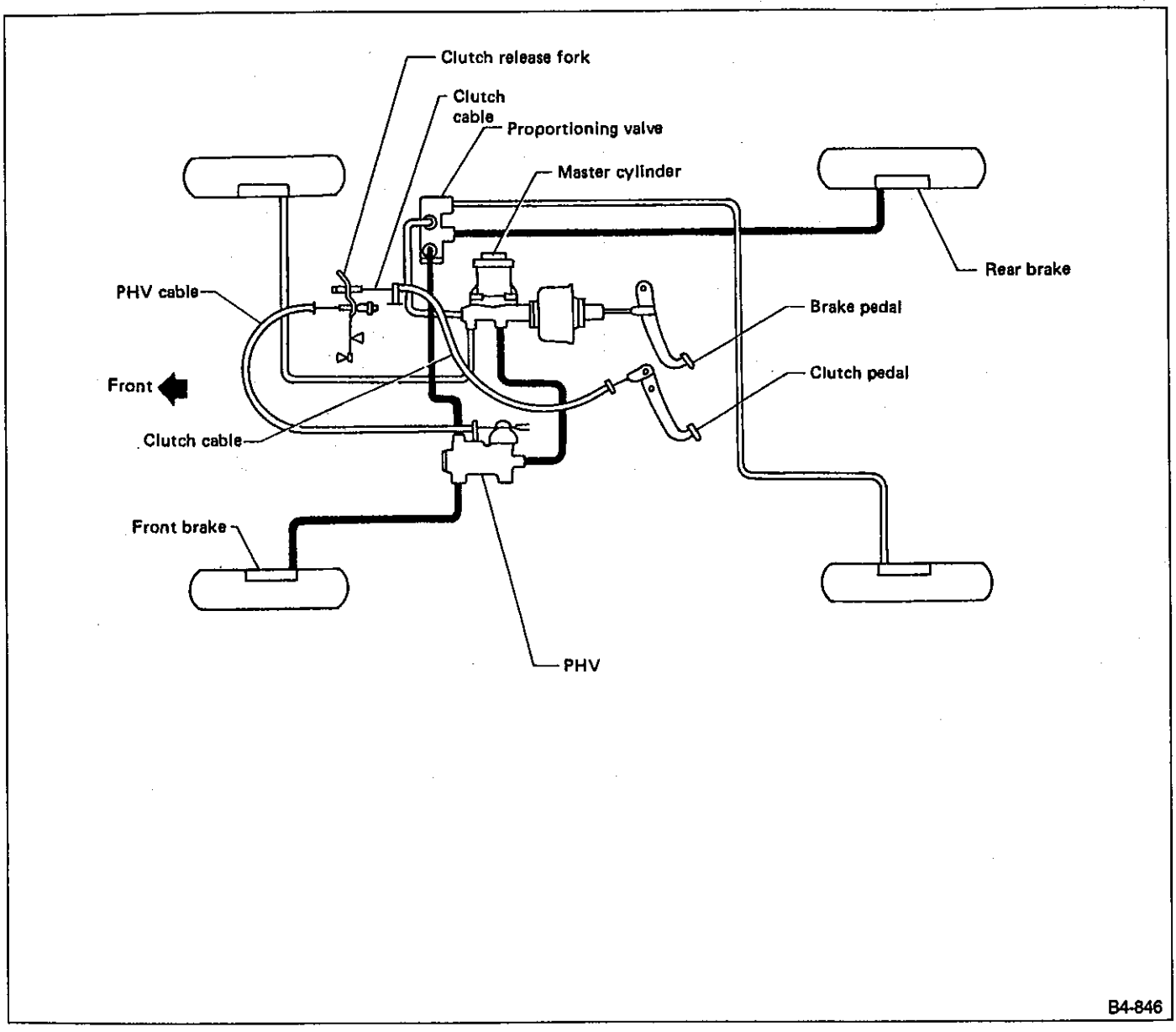

Fig. 23 Outline of hill-holder

B: PRESSURE HOLD VALVE (PHV)

PHV (Pressure Hold Valve) is connected to one of the service brake pipes and pushrod ⑧ is pushed in and/or pulled out by cam shaft ② interlinked with the clutch pedal to change the clearance between ball ③ and seal ⑤, thereby opening and/or closing the hydraulic circuit. Normally, on a flat road, ball ③ is located at the front and the valve is kept opened regardless of the position of the pushrod. (This status is the same as on a downhill road.)

When stopping the vehicle on an uphill road by depressing both brake and clutch pedals, the ball rolls toward the rear and, at the same time, the pushrod retracts to close the valve, so that hydraulic pressure is

maintained. Even when taking your foot off the brake pedal, the hydraulic pressure is maintained so far as the clutch pedal is kept depressed. In this status, when engaging the clutch ordinarily while depressing the accelerator pedal, the maintained hydraulic pressure is released simultaneously with the generation of driving force to permit smooth starting.

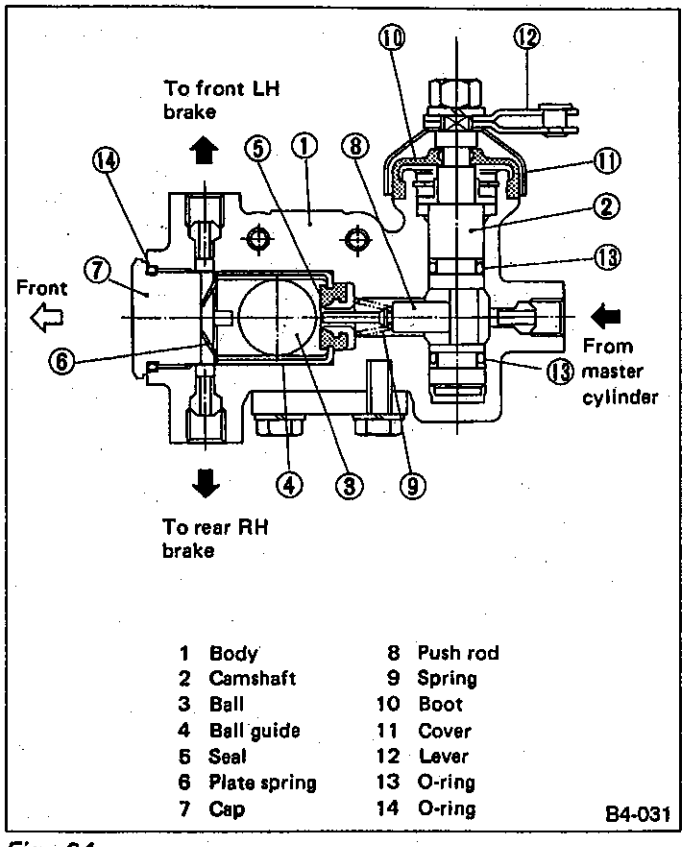

Fig. 24

1. ACTIVATING CONDITION

This device is activated only when depressing the clutch and brake pedals with the vehicle stopped on an uphill road.

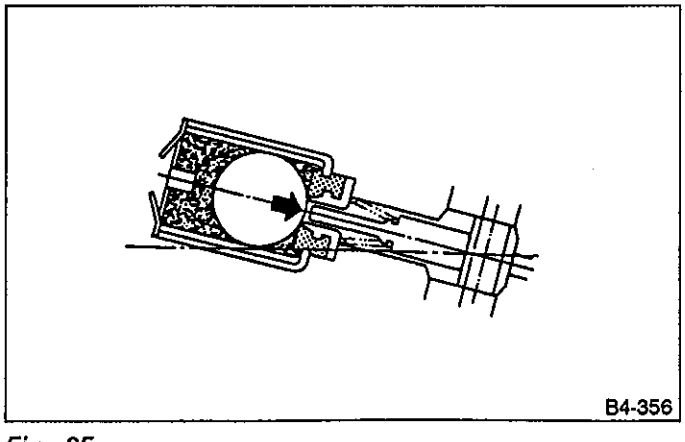

Fig. 25

When stopping the vehicle on an uphill road, the ball rolls toward the rear to seal the port and therefore the hydraulic pressure is maintained even by releasing the brake pedal.

2. INACTIVE STATUS

This accessory is not activated in any status other than the above.

1) While driving

(1) During acceleration or usual driving

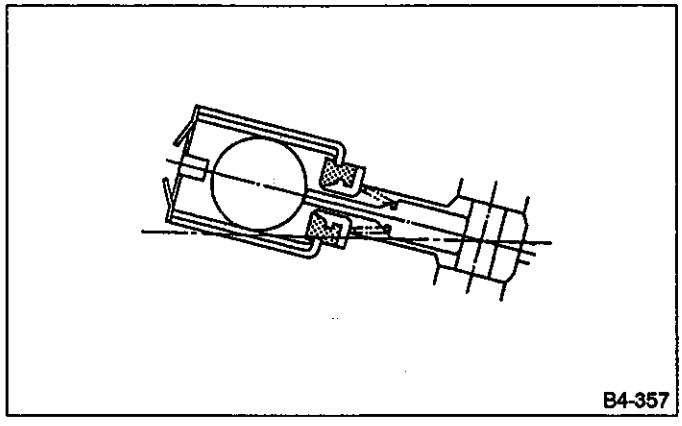

Fig. 26

Since the clutch pedal is not depressed, the pushrod is located outside the port. In this status, hydraulic pressure cannot be maintained.

(2) During deceleration

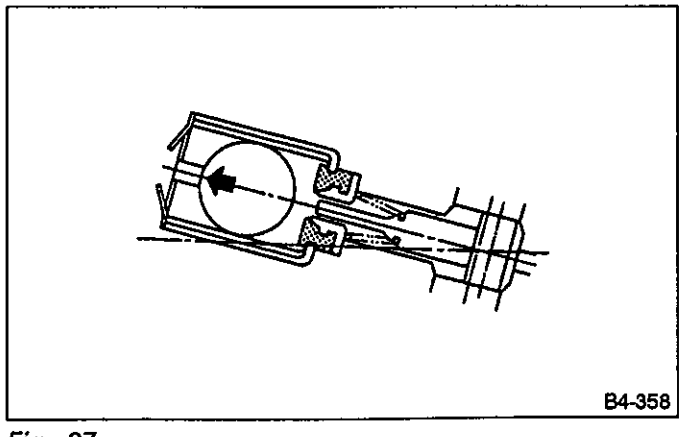

Fig. 27

Even when depressing the clutch pedal, the ball is kept at the front by decelerating force. In this status, hydraulic pressure is not maintained.

2) When stopping

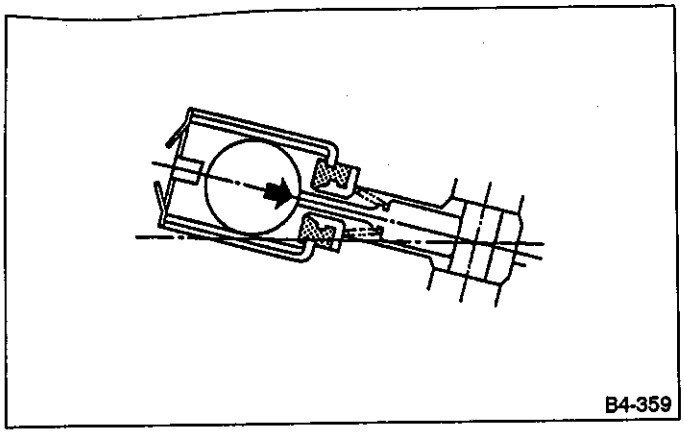

Fig. 28

Even when stopping on an uphill road, hydraulic pressure is not maintained unless the clutch pedal is depressed.

3) On a flat road

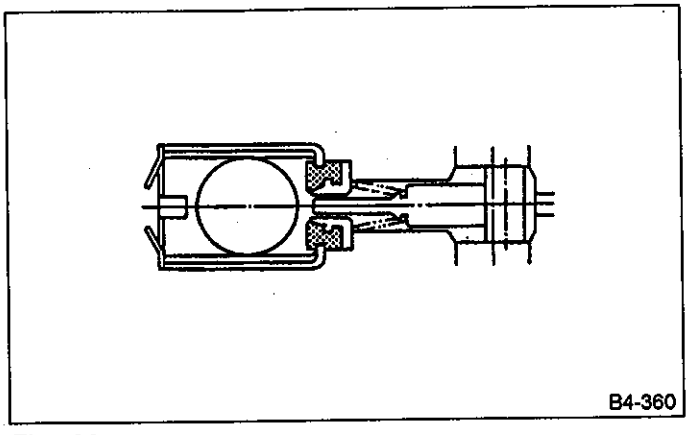

Fig. 29

This device is not designed to operate on a flat road, except for reversing.

C: OPERATIONAL PRECAUTIONS

1) The hill-holder is a device used to facilitate starting on an uphill road. When stopping on an uphill road, therefore, you must keep the brake pedal depressed or pull the parking brake.

2) The hill-holder may not be activated on a slope of an extremely small incline.

3) If the brake is not held sufficiently upon releasing the brake pedal with the clutch pedal depressed, press down the brake pedal a little more strongly once again.

4) If the clutch pedal is depressed again in the course of the starting operation, the brake may be released. In this case, depress the brake pedal again. (Because the brake is released when returning the clutch pedal halfway.) (For example, when interrupting starting operation or shifting gear from other than LOW because of misoperation.)

5) Before you leave the driver's seat, be sure to pull the parking lever and confirm that the vehicle is kept stopped upon releasing the clutch pedal.

6) When reversing the vehicle on a flat road, the following phenomena may be felt. These phenomena are caused by the activation of the hill holder, which does not constitute abnormality.

(1) Brake effect remains even after releasing the brake pedal if depressing the clutch and brake pedals when reversing the vehicle.

(2) A slight shock is given to the vehicle when starting the vehicle after stopping the reverse movement.

8. Anti-lock Brake System

A: OUTLINE

1. FEATURE

The ABS (Anti-lock brake system) electrically controls brake fluid pressure to prevent wheel "lock" during braking on slippery road surfaces, thereby improving directional/steering stability as well as shortening the braking distance.
If the ABS becomes inoperative, the fail-safe system activates to ensure it acts as a conventional brake system. The warning light also comes on to indicate that the ABS is malfunctioning.
The front-and-rear wheels utilize a 4-sensor, 4-channel control design: the front wheels have an independent control design*1 and the rear wheels have a select low control design*2.
*1: A system which independently controls fluid pressure to left and right front wheels.
*2: A system which provides the same fluid pressure control for the two rear wheels if either wheel starts to "lock."

2. COMPONENTS

The ABS consists of four tone wheels ⑤, four ABS sensors ④, an electronic control unit ⑧, a hydraulic control unit ⑦, a G sensor ⑥ and a warning light ⑩.
ABS component parts

Item	Function
Tone wheel	Attached to each wheel hub and rotates at the same speed as the hub.
ABS sensor	Emits a wheel speed signal during tone wheel rotation.
Electronic control unit	Receives wheel-speed signals from speed sensors and sends a control signal to hydraulic unit so that fluid pressure is optimally controlled.
Hydraulic control unit (There are two types of ABS, NIPPON ABS and BOSCH ABS.)	Receives a control signal from electronic control unit and controls respective wheel cylinder fluid pressure.
G sensor (4WD manual transmission model)	Detects vehicle deceleration.
Warning light	Comes on when ABS becomes inoperative.

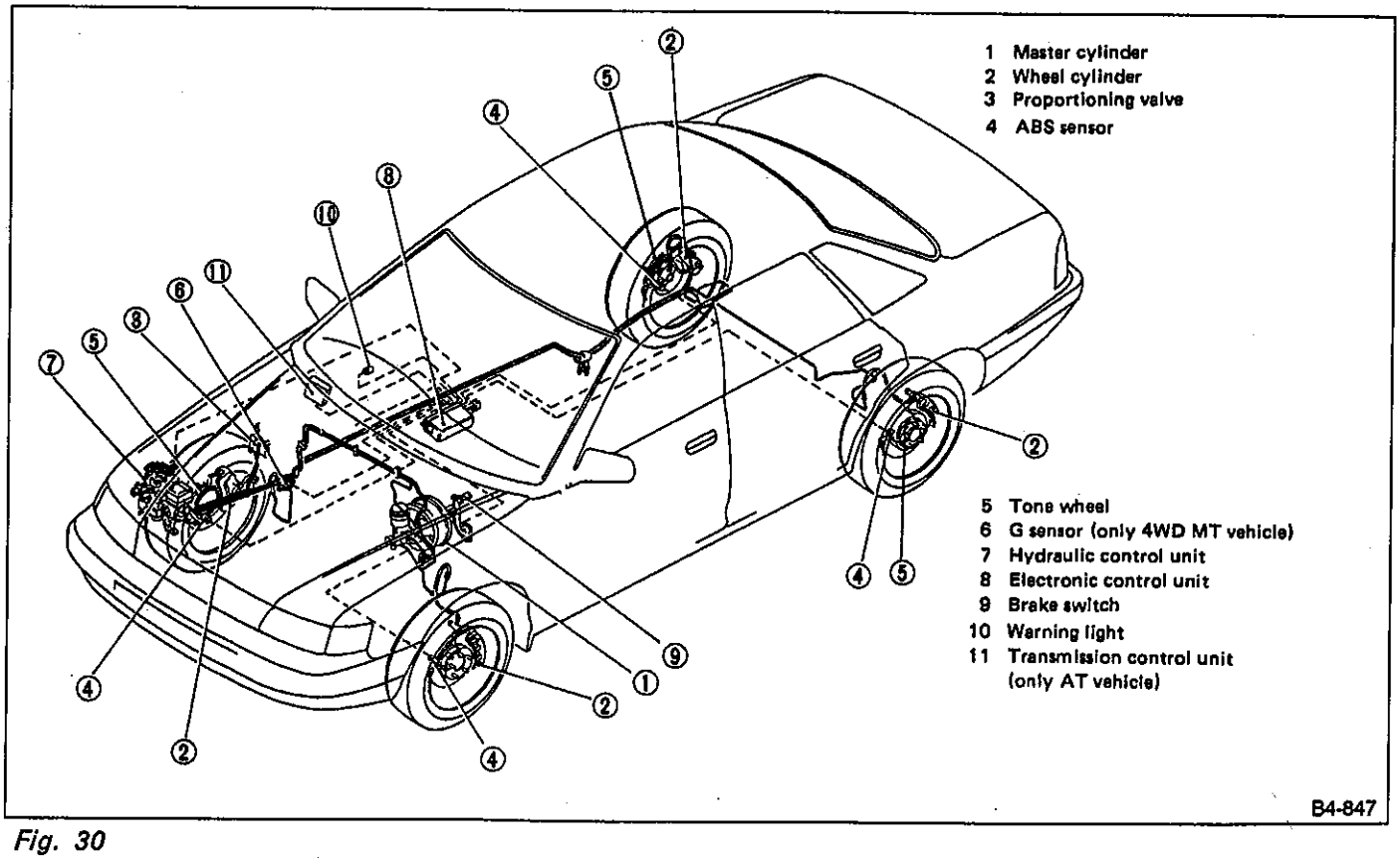

Fig. 30

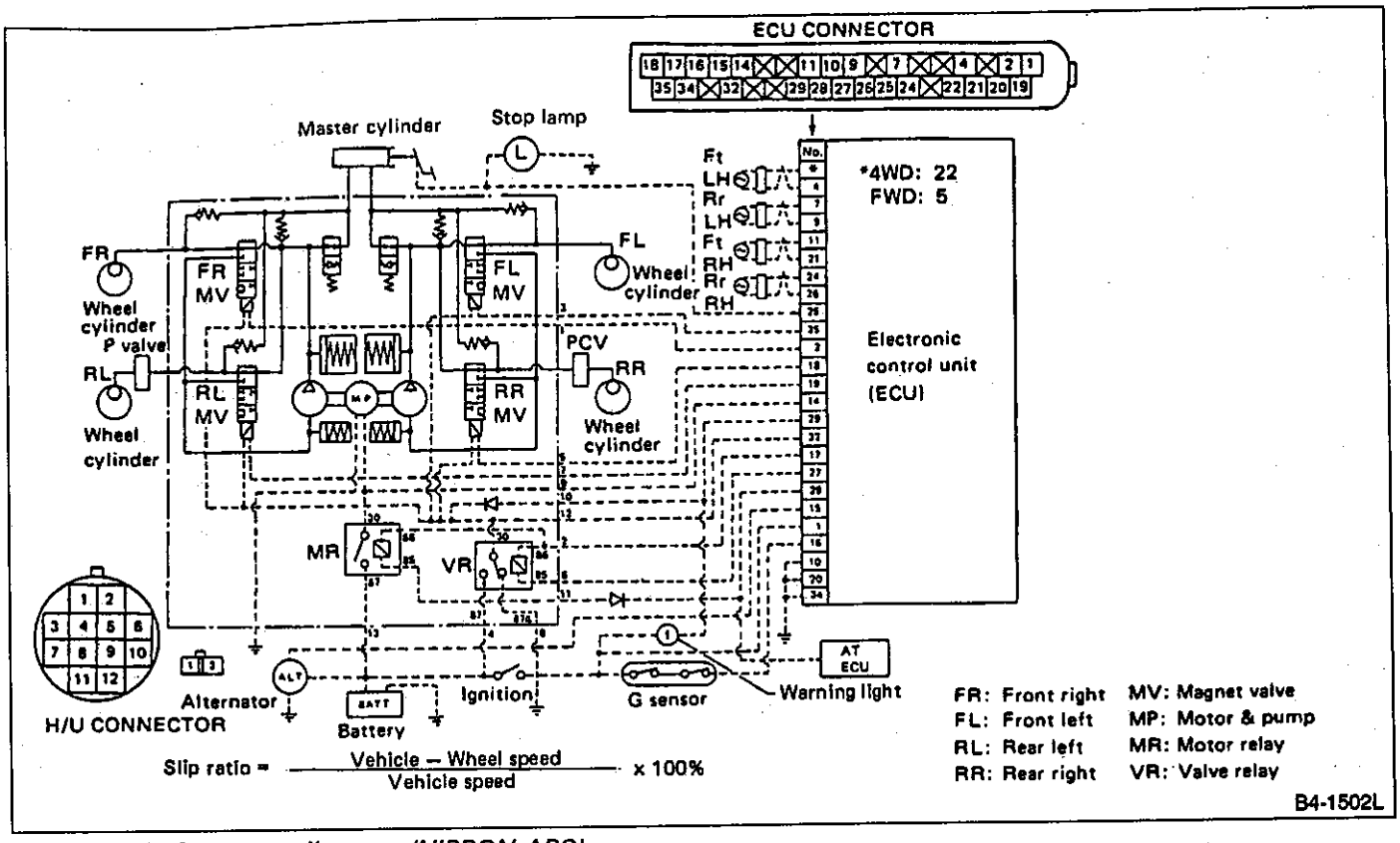

Fig. 31 ABS system diagram (NIPPON ABS)

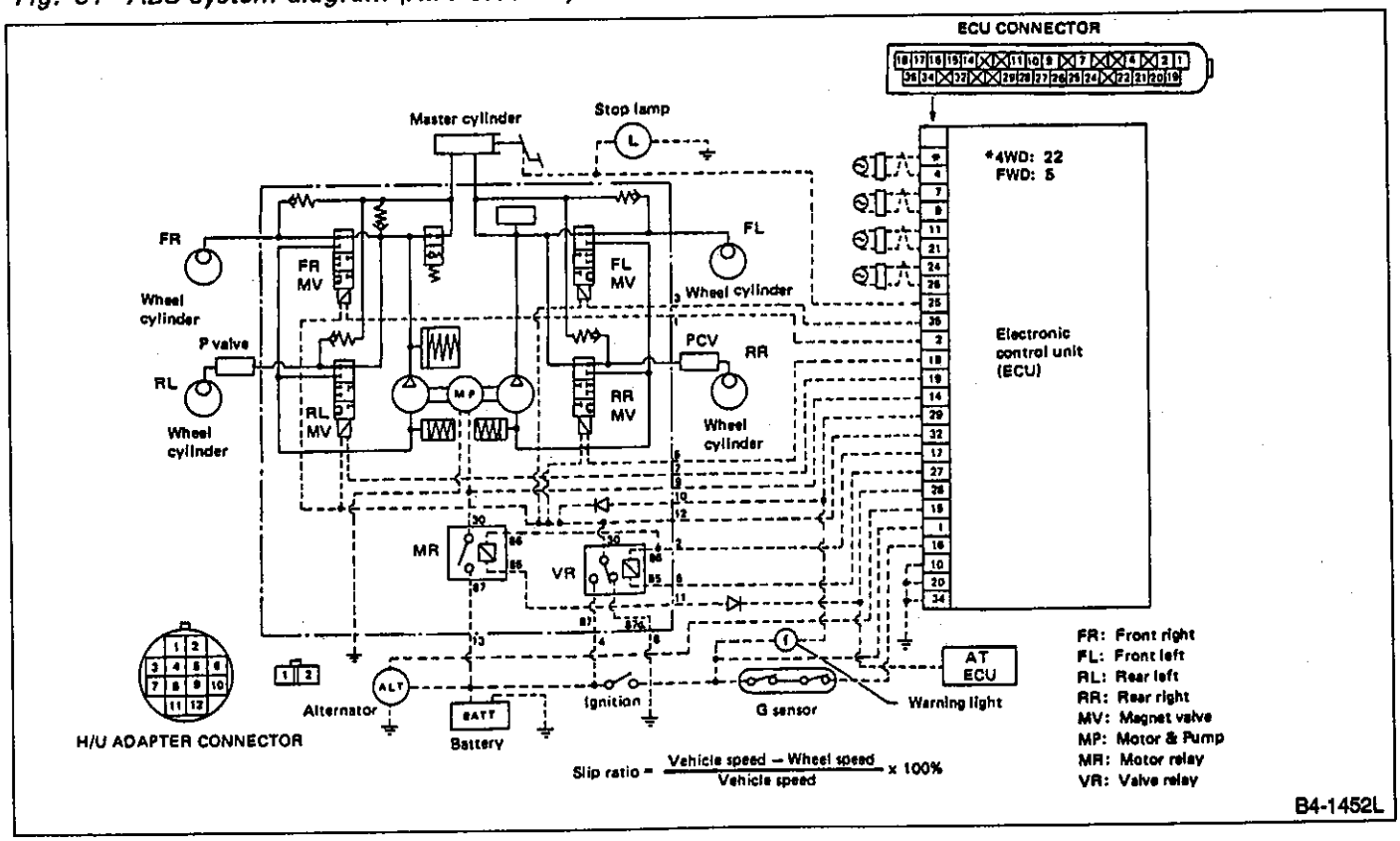

Fig. 32 ABS system diagram (BOSCH ABS)

3. THEORY OF ABS CONTROL

When the brake pedal is depressed during operation, wheel speed as well as vehicle speed decreases. The difference which occurs between wheel speed and vehicle speed is called the "slip" phenomenon. The magnitude of this action is expressed by "slip" the ratio which is determined by the following equation:

$$\text{Slip ratio} = \frac{\text{Vehicle speed} - \text{Wheel speed}}{\text{Vehicle speed}} \times 100\%$$

When the "slip" ratio is 0% vehicle speed equals wheel speed and the wheel rotates without any slippage. When the "slip" is 100%the wheel locks and does not rotate (wheel speed = 0) although vehicle speed exists. The relationship between the frictional force of a wheel in the fore-and-aft direction and the "slip" ratio is shown by two characteristic curves in Figure 33.
These curves are determined by the relationship between the wheel and road surface. Where the same type of wheel are used; the curve shown by a solid line indicates wheels driven on asphalt or paved roads, the curve shown by dotted lines refers wheels subjected to slippery (snowy or icy) roads.
When different types of wheels are used, although the road surface is the same, these curves will change. In general, the frictional coefficient between wheel and road surface in relation to an increase in the "slip ratio" will reach the maximum value in the 8 —30%range and will tend to decrease after that.

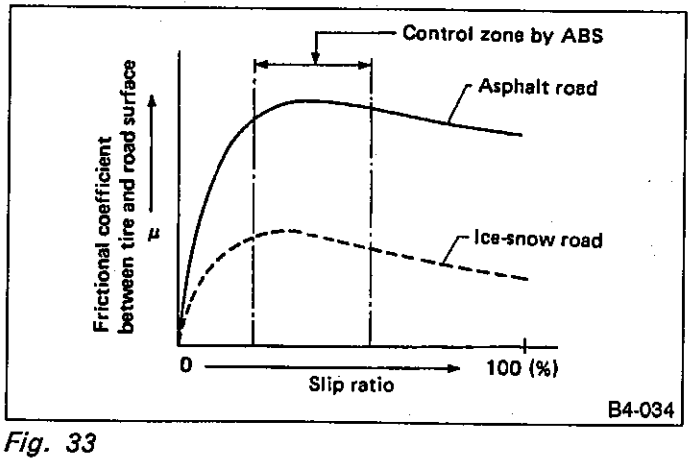

Fig. 33

B: CONSTRUCTION AND OPERATION

1. ABS SENSOR

The ABS sensor detects wheel speed and consists of a permanent magnet, coil, tone wheel, etc. The magnetic flux produced by the permanent magnet varies with the tone wheel (which rotates together with the wheel) and the sensor emits an alternating voltage corresponding with the wheel speed by electromagnetic induction.

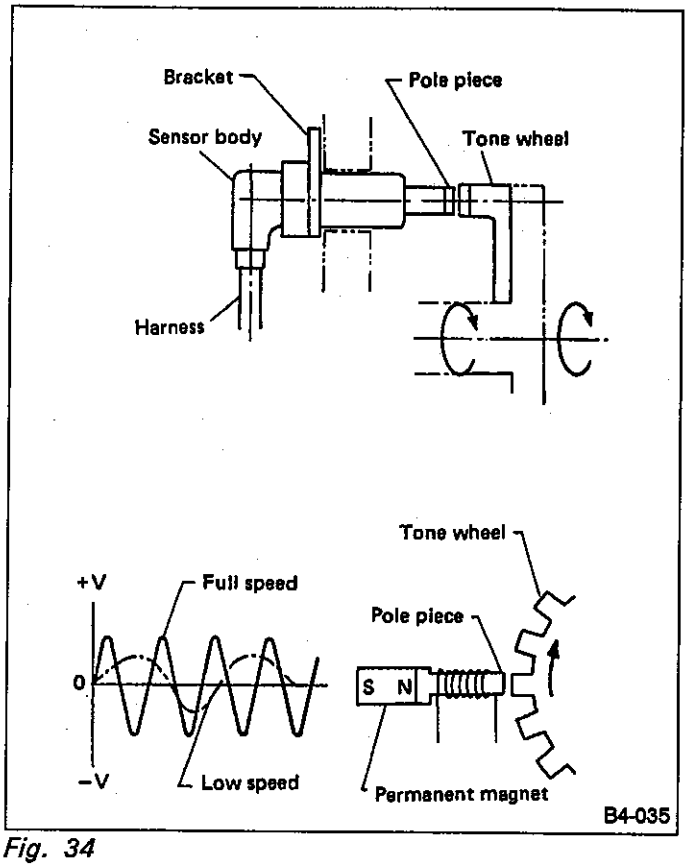

Fig. 34

2. ELECTRONIC CONTROL UNIT (E.C.U.)

1) The electronic control unit is a digital type that utilizes LSI elements to achieve compact structure and improve circuit reliability.
It consists of an arithmetic circuit, control circuit, signal input-output circuits, a safety circuit and a regulated power circuit. All these circuits are housed in the case located on the PC board.

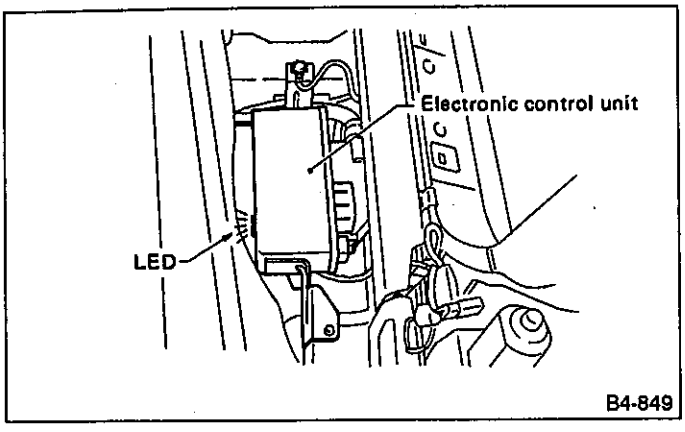

Fig. 35

2) Figure 36 shows a block diagram of the electronic circuits. When the ABS sensor sends an alternating voltage corresponding with the wheel speed to the input amplifier circuit, the signal voltage is converted into a rectangular wave which is sent to the digital signal generating circuit. (This circuit receives two channels of signal at a time.)
The LSI circuit, which consists of approximately 16,000 transistors,computes wheel speed in relation to the signal sent from the ABS sensor. It then emits the required control signal as a result of computation. This circuit also contains a safety circuit for monitoring purposes. The control signal emitted from the LSI circuit is then sent to the current-control and -amplification circuits where a signal is produced to operate the magnet valve of the hydraulic control unit.
The memory circuit, which serves to memorize system failure, and monitor the regulated power circuit and others, is housed in a separate IC. When the E.C.U. power is applied with the ignition switch "ON",the safety circuit begins to monitor electronic circuits, sensors, the hydraulic control unit, etc. If any circuits or units malfunction, a warning light (dual circuit design) comes on to warn the driver of a problem. The LED in the ECU illuminates to show a trouble code. The brake system then functions as a conventional brake system in place of the ABS.

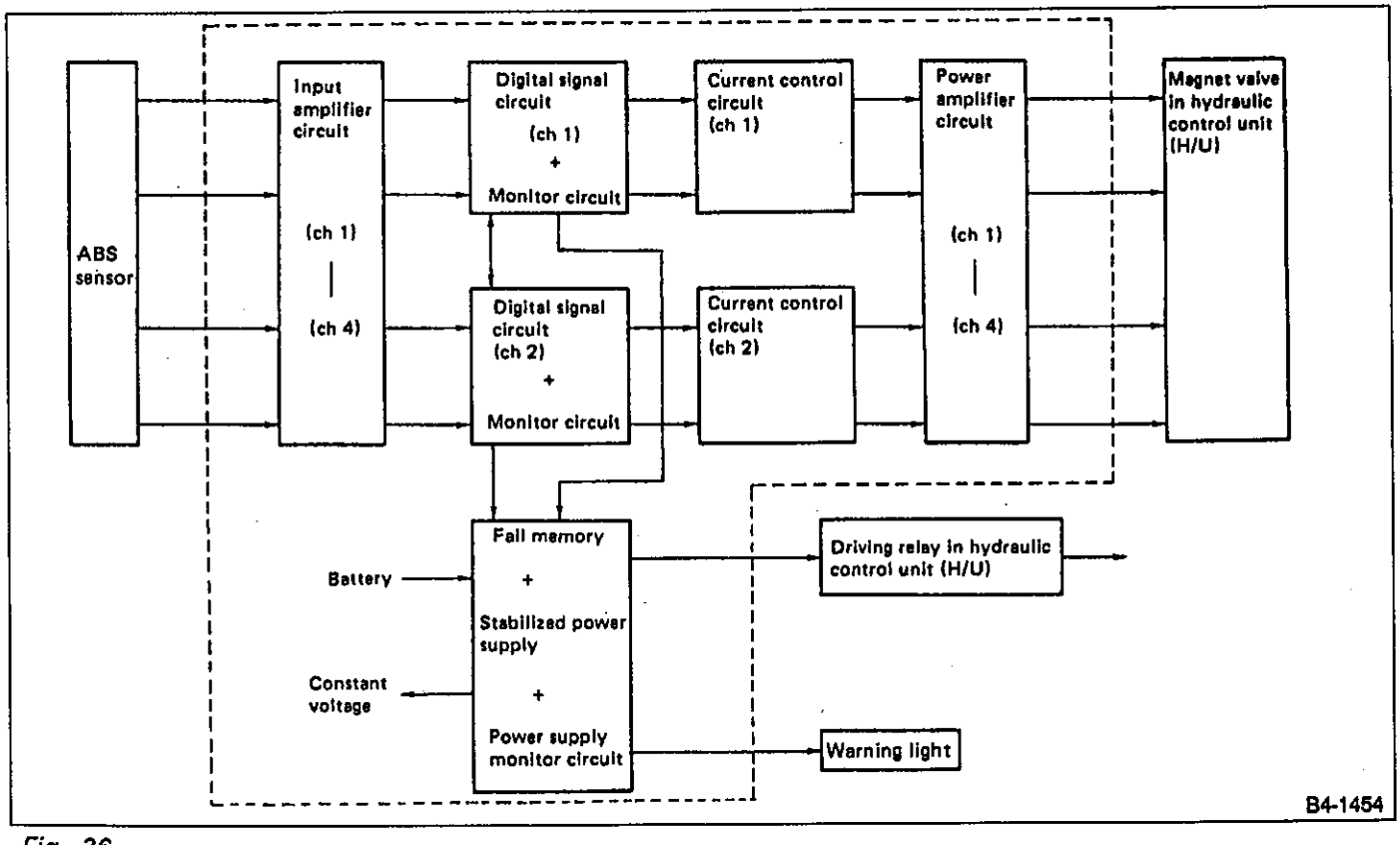

Fig. 36

3. ABS CONTROL CYCLE CURVES

As the brake pedal is depressed, brake fluid pressure increases correspondingly, which in turn decreases wheel speed. When brake fluid pressure reaches point "A" (where wheel deceleration exceeds"$-b_0$"), the control unit transmits a "hold" signal to hold the brake fluid pressure in wheel cylinder at that point. At the same time, the control unit computes a "dummy" vehicle speed. When the wheel speed drops below the slip-ratio setting (= speed less than the dummy vehicle speed based on the predetermined value) at point"B" of the brake fluid pressure, the control unit then transmits a"decrease" signal to prevent wheel lock-up. This causes the brake fluid pressure to decrease.

After brake fluid pressure is decreased, wheel acceleration increases. When it exceeds the wheel acceleration setting "$+b_{10}$"at point "C" (brake fluid pressure), the control unit transmits a"hold" signal to hold the brake fluid pressure at that point. When wheel acceleration setting value "$+b_{10}$" is exceeded and when brake fluid pressure is at point "D", the control unit judges that wheel lockup will not occur and then transmits an "increase' 'signal to increase brake fluid pressure.

When wheel acceleration drops below "$+b_0$" at point"E" (which occurred due to a brake fluid pressure increase), the repetition of the "hold" and "increase" signals takes place a at constant cycle.

When wheel deceleration exceeds "$-b_0$", at point"F" of the brake fluid pressure, the control unit immediately transmits a "decrease" signal to decrease brake fluid pressure.

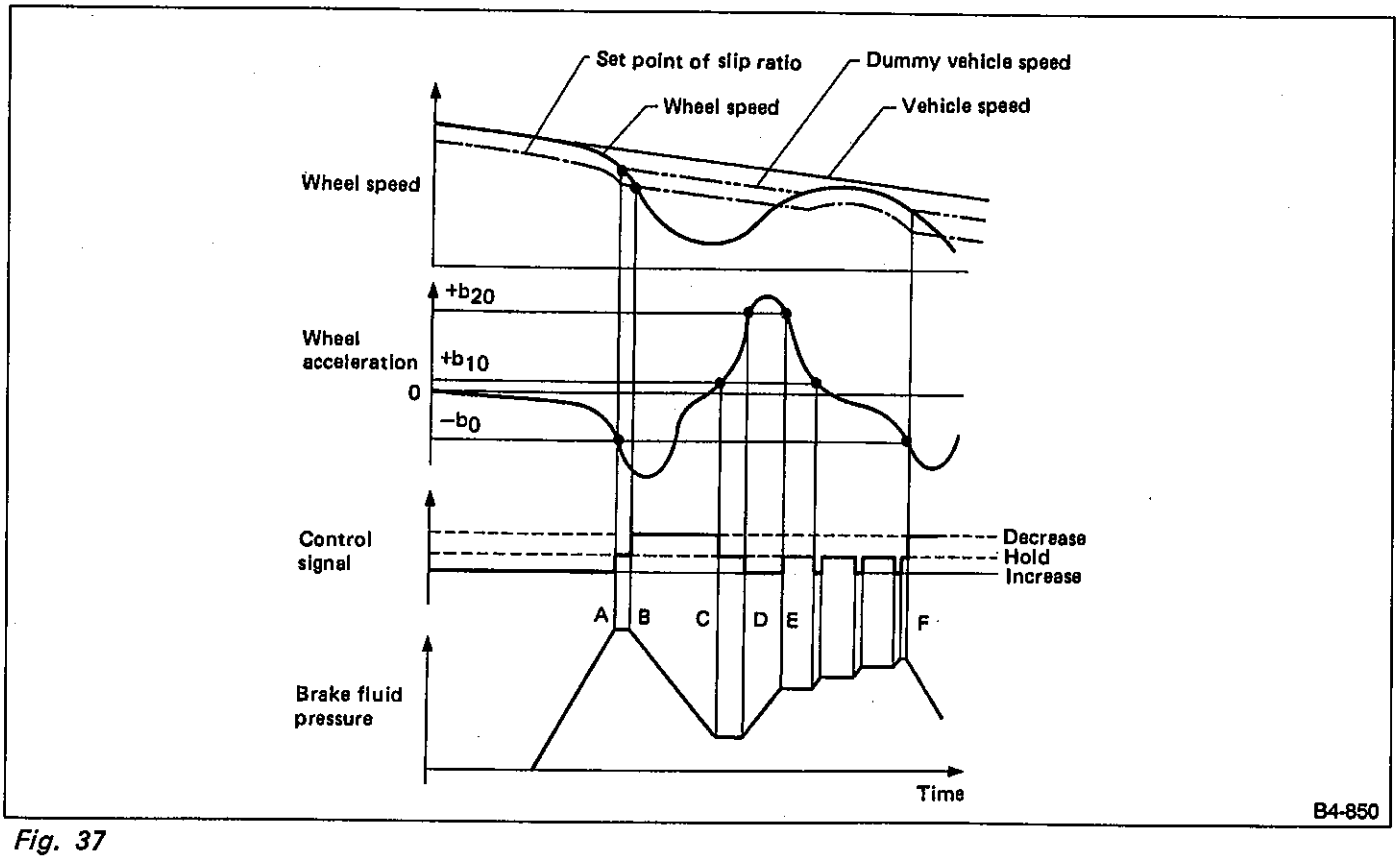

Fig. 37

4. ABS WARNING LIGHT

When a signal system or the electronic control unit (E.C.U.) becomes inoperative, the warning light in the instrument panel comes on to indicate that the system or control unit is malfunctioning. At the same time, current flowing through the hydraulic control unit is interrupted so that the brake system functions as a conventional brake system. The circuit through which the warning light comes on utilizes a dual system design.

If the warning light comes on upon detection of a system malfunction, the control unit's LED also shows a trouble code.

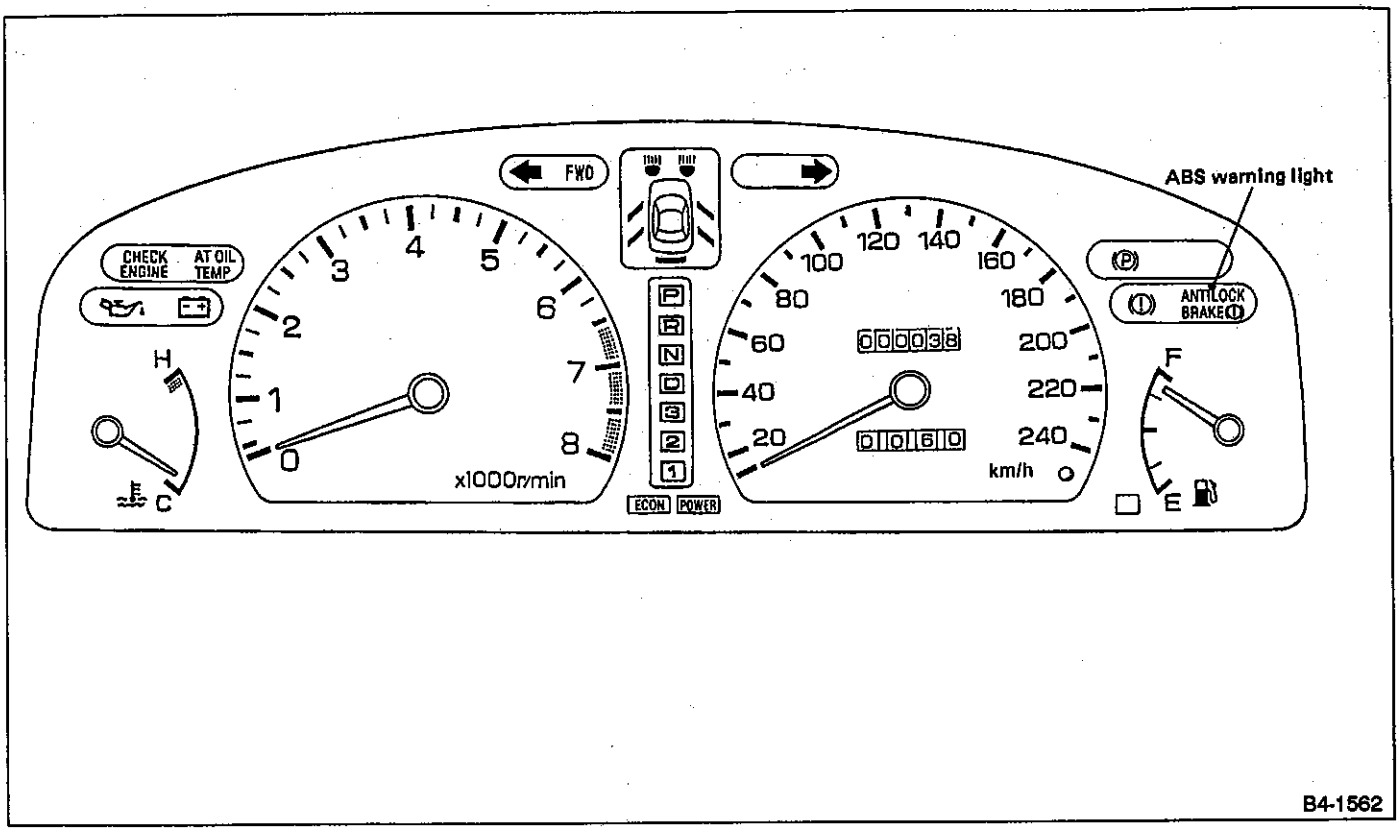

Fig. 38

5. HYDRAULIC CONTROL UNIT

The hydraulic control unit is a fluid pressure control assembly which is composed of an electric motor, a plunger pump, a damper, a housing,a magnet valve and a relay.

There are two types of hydraulic control unit. One is manufactured by Nippon ABS, LTD. under license from ROBERT BOSCH GmbH, and the other is manufactured by ROBERT BOSCH GmbH. Both hydraulic control units are very similar to each other. The BOSCH type hydraulic control unit does not have the F-valve but has brake pedal "kick back" instead.

⟨NIPPON ABS⟩

1) During normal braking

When the brake pedal is depressed, fluid pressure is delivered from master cylinder ① to magnet valve ④ via F-valve ② while moving the ball up. Since current does not flow through the magnet valve, fluid pressure is delivered to wheel cylinder ⑫ so that normal braking force occurs.

Fluid pressure delivered to the F-valve ② also reaches outlet valve ⑧ which is sealed by the ball.

Accumulator ⑪ has its spring set to act by high fluid pressure,and not by normal fluid pressure. When current does not flow through the magnet valve, the outlet port is sealed so that the oil passage to reservoir ⑤ is not linked.

When the brake pedal is released, master cylinder ① fluid pressure will decrease. Wheel cylinder ⑫ pressure will then return to the master cylinder ① while pushing the ball of check valve ③. At this point, F-valve ② is moved up by the ball to prevent wheel cylinder ⑫ pressure from returning to the master cylinder①.

However, when master cylinder ① pressure drops below approximately 981 kPa (10 kg/cm^2, 142 psi), the F-valve ②'s return spring is moved to the left to push the ball up. This allows a slight amount of residual pressure (applied to check valve ③) to be delivered to wheel cylinder ⑫ via magnet valve ④.

When the brake pedal is slightly released while the ABS is operating,excess wheel cylinder fluid pressure returns to the master cylinder via check valve ③ so that wheel cylinder fluid pressure is balanced with master cylinder fluid pressure.

During the time the excess wheel cylinder fluid pressure returns to the master cylinder, the driver may feel a pedal "kickback".

This is not an indication of a problem.

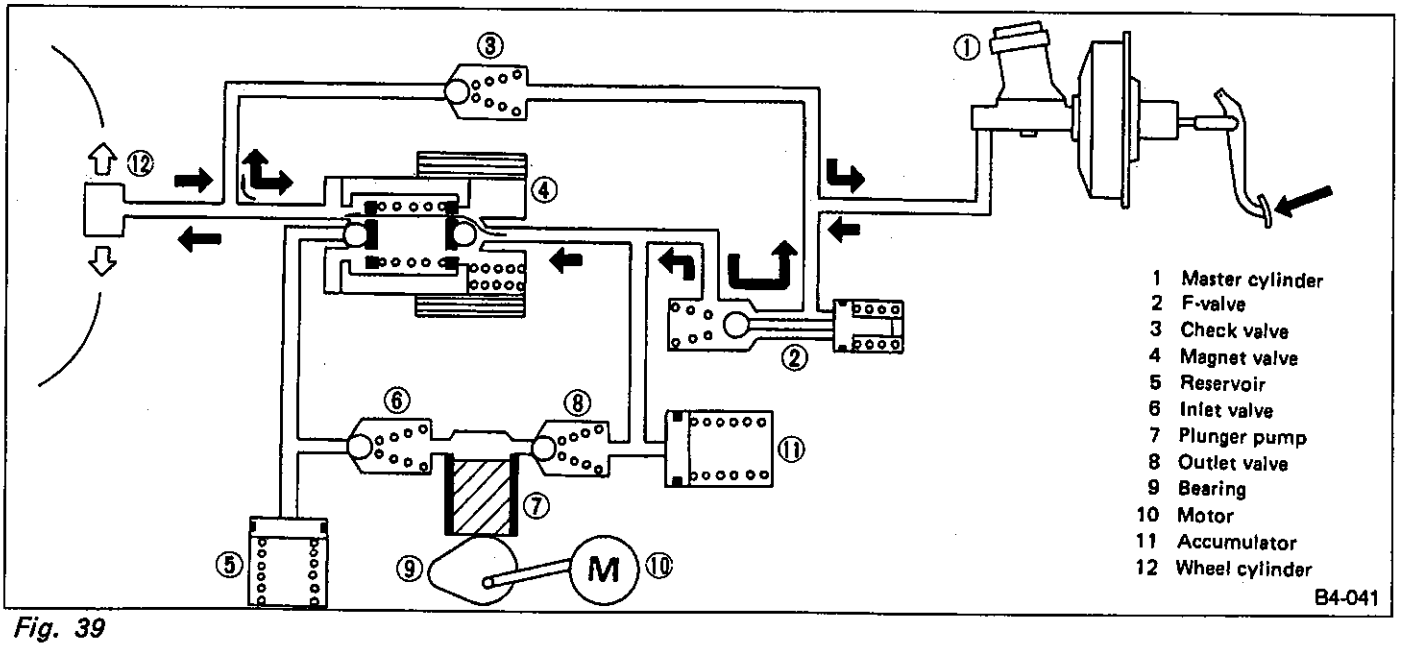

Fig. 39

2) Pressure-decrease action with ABS in operation
When the wheels begin to lock during brake application, the E.C.U. emits an instruction so that a current of 4.8 to 6 amperes (which decreases fluid pressure)flows through magnet valve ④.
This closes the inlet port of the magnet valve ④ and opens the outlet port so that wheel cylinder ⑫ pressure is delivered to reservoir ⑤ via the outlet port. Since current also flows through the motor ⑩ (simultaneously when the current flows through the magnet valve), motor ⑩ will start to activate the plunger pump⑦ via the bearing ⑨ (provided with an eccentric cam)connected to it. Brake fluid pressure delivered to reservoir ⑤then passes through inlet valve ⑥ and is increased by plunger pump⑦. Increased brake fluid then passes through inlet valve ⑥and is stored in accumulator ⑪. At this point, the increased brake fluid pressure is sealed by the ball of valve F ② to shutout the fluid pressure in master cylinder ①: Fluid pressure in wheel cylinder ⑫ also shuts out the fluid pressure in the master cylinder ① by means of check valve ③.
Wheel cylinder ⑫ fluid pressure will then decrease to prevent the brake pedal from kicking back while it is being controlled to accommodate vehicle deceleration.

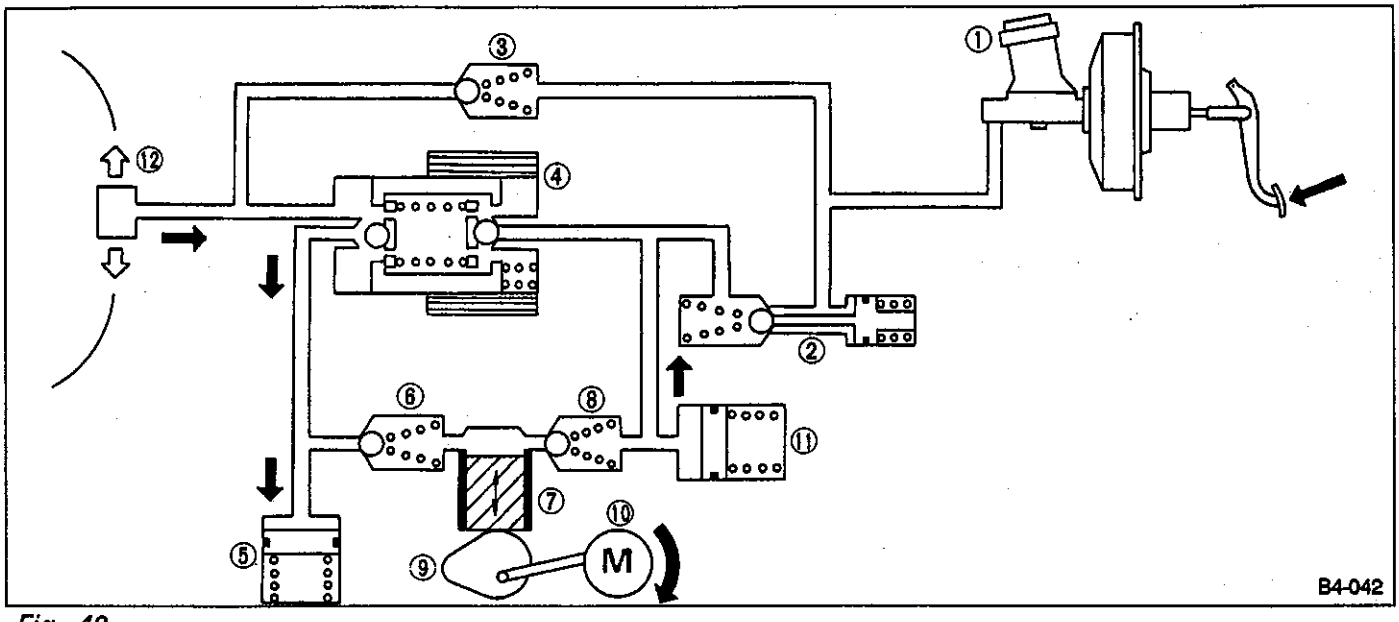

Fig. 40

3) Pressure "hold" action with ABS in operation
When wheel cylinder ⑫ fluid pressure is decreased or increased to the optimum point, the controller emits an instruction so that a hold current of 1.9 to 2.3 amperes flows through magnet valve ④.The inlet and outlet ports will then be closed. At this point, the controlled fluid pressure is held in the wheel cylinder ⑫, the fluid pressure increased by the pump (which increases the decreased wheel cylinder) is stored in accumulator ⑪, the fluid pressure increased by brake pedal depression force is held in master cylinder ① and the fluid pressure discharged from the pump is held in reservoir ⑤.

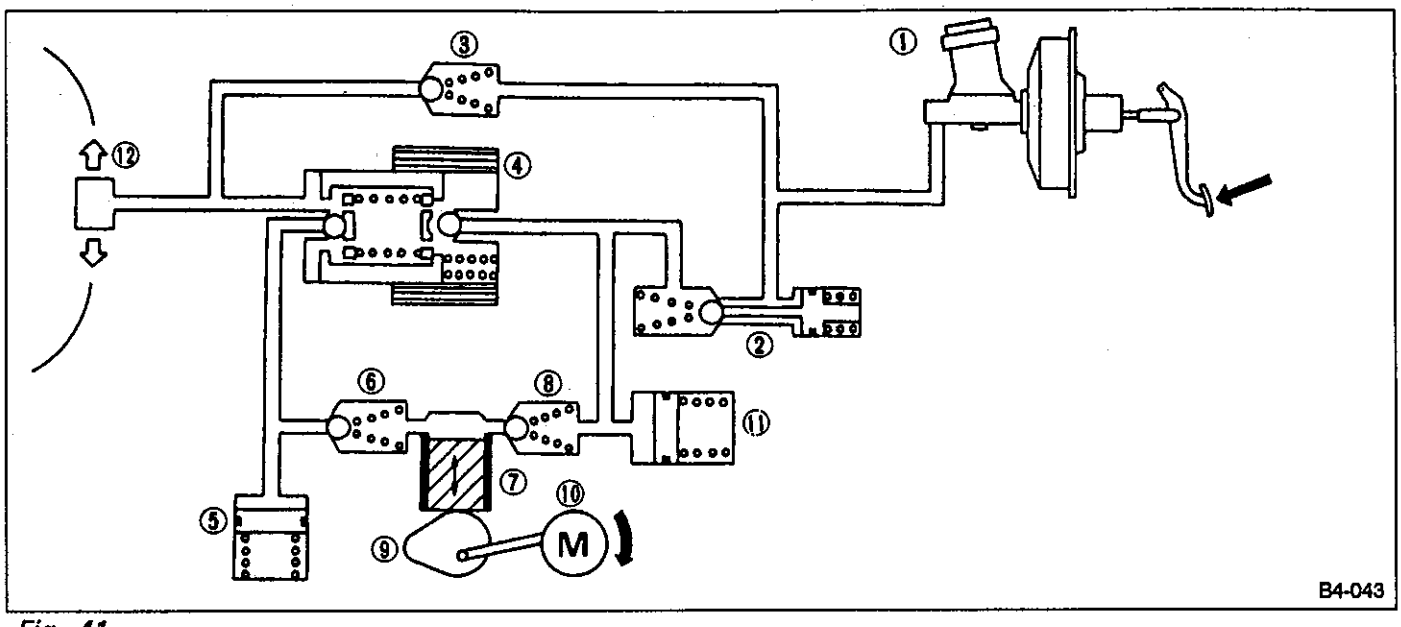

Fig. 41

4) Pressure-increase action with ABS in operation
When current flowing through magnet valve ④ is interrupted (OFF) by an instruction emitted from the E.C.U., the fluid pressure of wheel cylinder ⑫ is increased. (At this point, internal passages of the magnet valve function is the same as in a conventional brake system.) When the magnet valve ④ is OFF, the inlet port is opened and the outlet port is closed. High fluid pressure is then delivered from accumulator ⑪ to wheel cylinder ⑫ via the inlet port so that wheel cylinder pressure is increased. Since check valve ③and F-valve ② remain sealed by the fluid pressure of master cylinder ① and high fluid pressure of accumulator ⑪respectively, only wheel cylinder ⑫ fluid pressure is increased. Accordingly, a sensation of brake pedal "pull" will not occur.

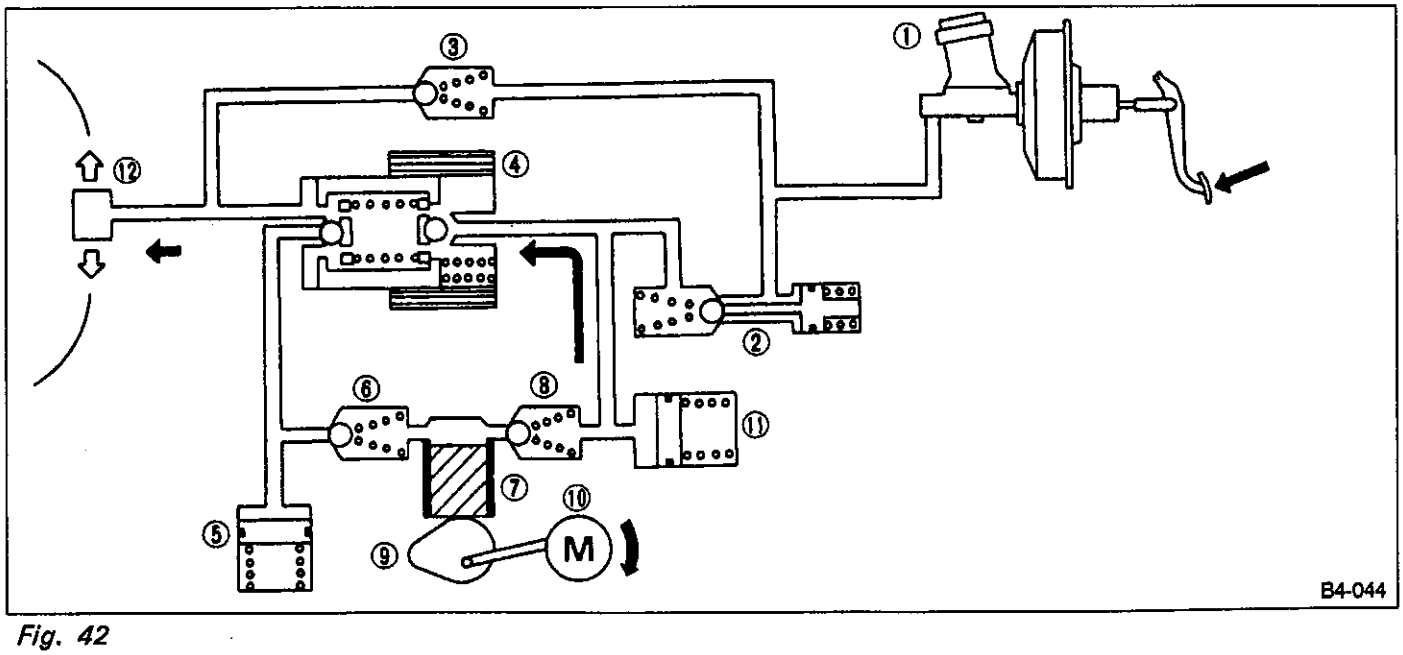

Fig. 42

〈BOSCH ABS〉

1) During normal braking

When the brake pedal is depressed, the brake fluid in the master cylinder ① goes through the magnet valve ④, and is delivered to the wheel cylinder ⑫, so that a normal braking force occurs. At the same time, the fluid pressure also reaches the outlet valve ⑧ which is sealed by the ball. At this time, current is not passing through the magnet valve ④, and so the oil passage to reservoir ⑤ is clogged by the magnet valve ④ and the outlet valve ⑧.

When the brake pedal is released, the fluid pressure in the master cylinder ① will decrease. The fluid in the wheel cylinder ⑫ is pushed back. This fluid goes through the magnet valve ④, at the same time, as going through the check valve ③ by pushing the inner ball. Then, it returns to the master cylinder ①.

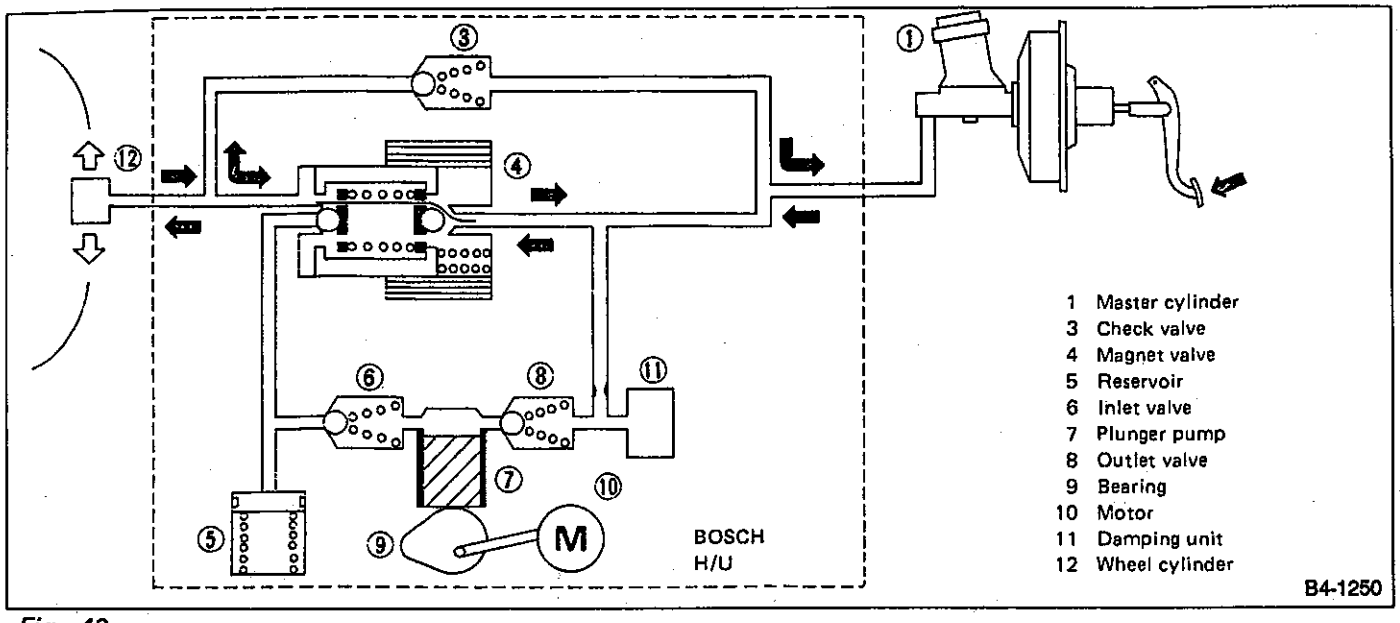

Fig. 43

2) Pressure-decrease action with ABS in operation
When the wheels begin to lock during brake operation, the E.C.U. emits an instruction so that a current of 4.8 to 6 amperes flows through magnet valve ④. This operation closes the inlet port of the magnet valve ④ and opens the outlet port so that wheel cylinder ⑫ pressure is delivered to reservoir ⑤ via the outlet port.
Brake fluid pressure delivered to reservoir ⑤ then passes through inlet valve ⑥ and is increased by plunger pump ⑦. This causes "kick back" of the brake pedal. Damping unit ⑪ reduces the pulse flow caused by plunger pump ⑦.
The fluid pressure in wheel cylinder ⑫ is shut off from the fluid pressure in master cylinder ① by means of check valve ③. This prevents master cylinder pressure from flowing into the wheel cylinder.
Wheel cylinder ⑫ fluid pressure will then decrease to prevent the wheel lock.

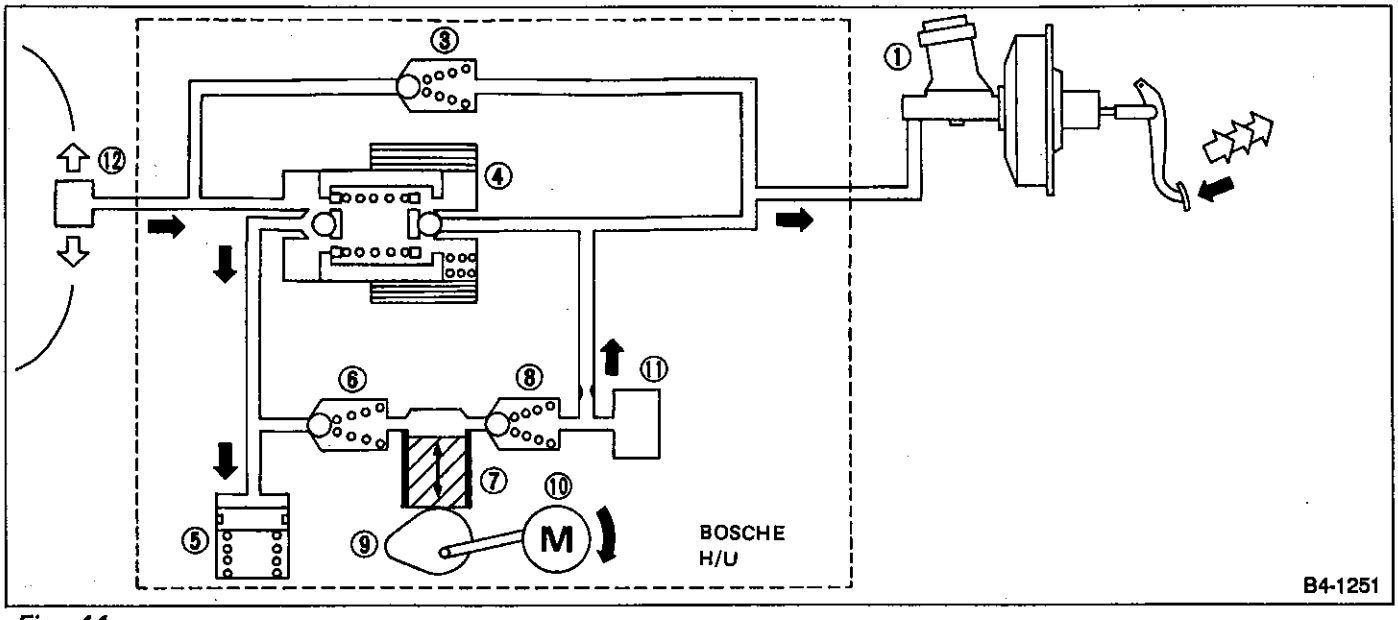

Fig. 44

3) Pressure "hold" action with ABS in operation
When wheel cylinder ⑫ fluid pressure is decreased or increased to the optimum point, the controller emits an instruction so that a hold current of 1.9 to 2.3 amperes flows through magnet valve ④. The inlet and outlet ports will then be closed. At this point, the controlled fluid pressure is held in the wheel cylinder ⑫, the fluid pressure increased by the pump (which increases the decreased wheel cylinder) is stored in accumulator ⑪, the fluid pressure increased by brake pedal depression force is held in master cylinder ① and the fluid pressure discharged from the pump is held in reservoir ⑤.

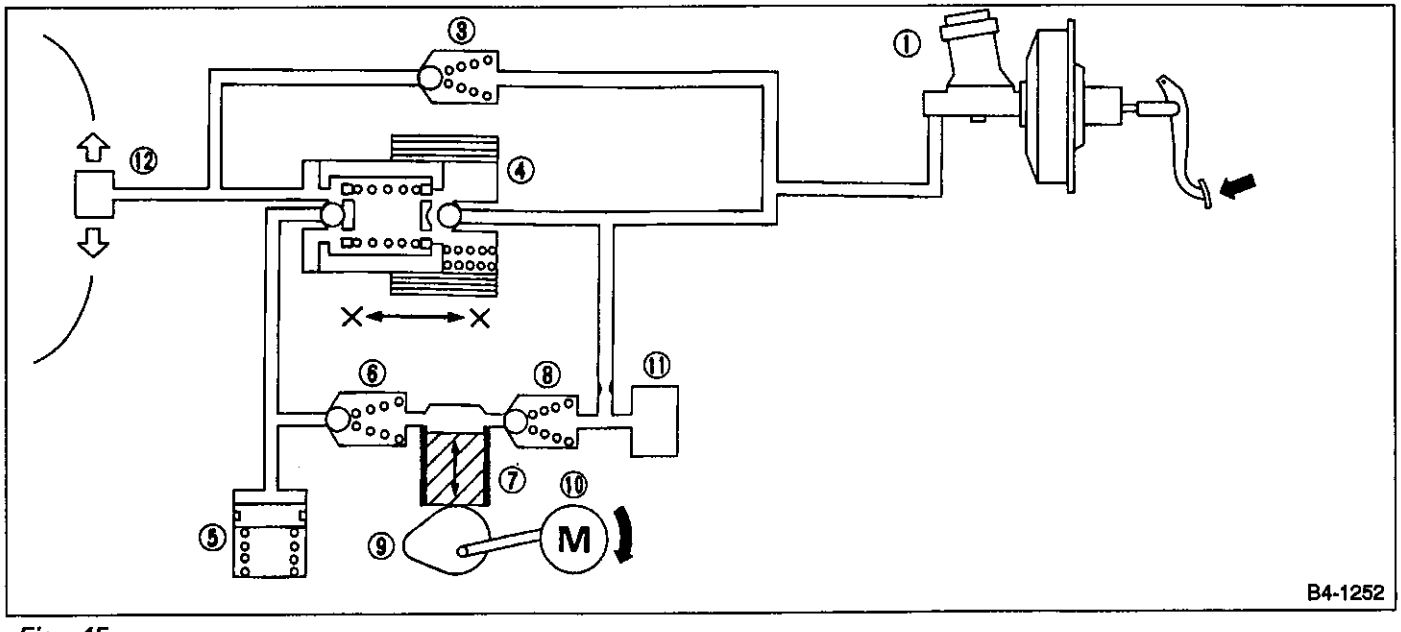

Fig. 45

4) Pressure-increase action with ABS in operation
When current flowing through magnet valve ④ is interrupted (OFF) by an instruction emitted from the E.C.U., the fluid pressure of wheel cylinder ⑫ is increased.
At this time, the magnet valve position is the same as the normal braking position. When magnet valve ④ is OFF, the inlet port is opened and the outlet port is closed.
High fluid pressure caused by the force on the brake pedal is then delivered to wheel cylinder ⑫ via the inlet port so that wheel cylinder pressure is increased.

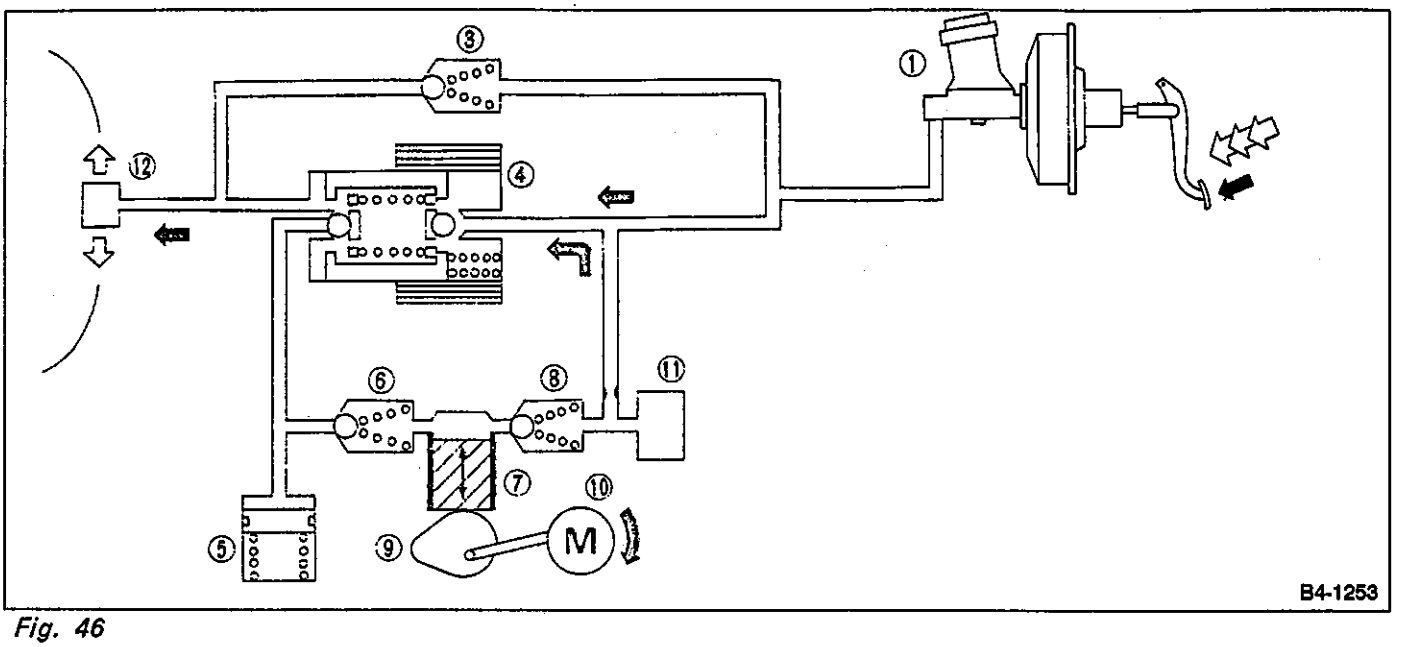

Fig. 46

9. Parking Brake (Rear Disc Brake)

A: OUTLINE

The rear disc brake has its parking brake drum housed in the disc rotor for improved performance.

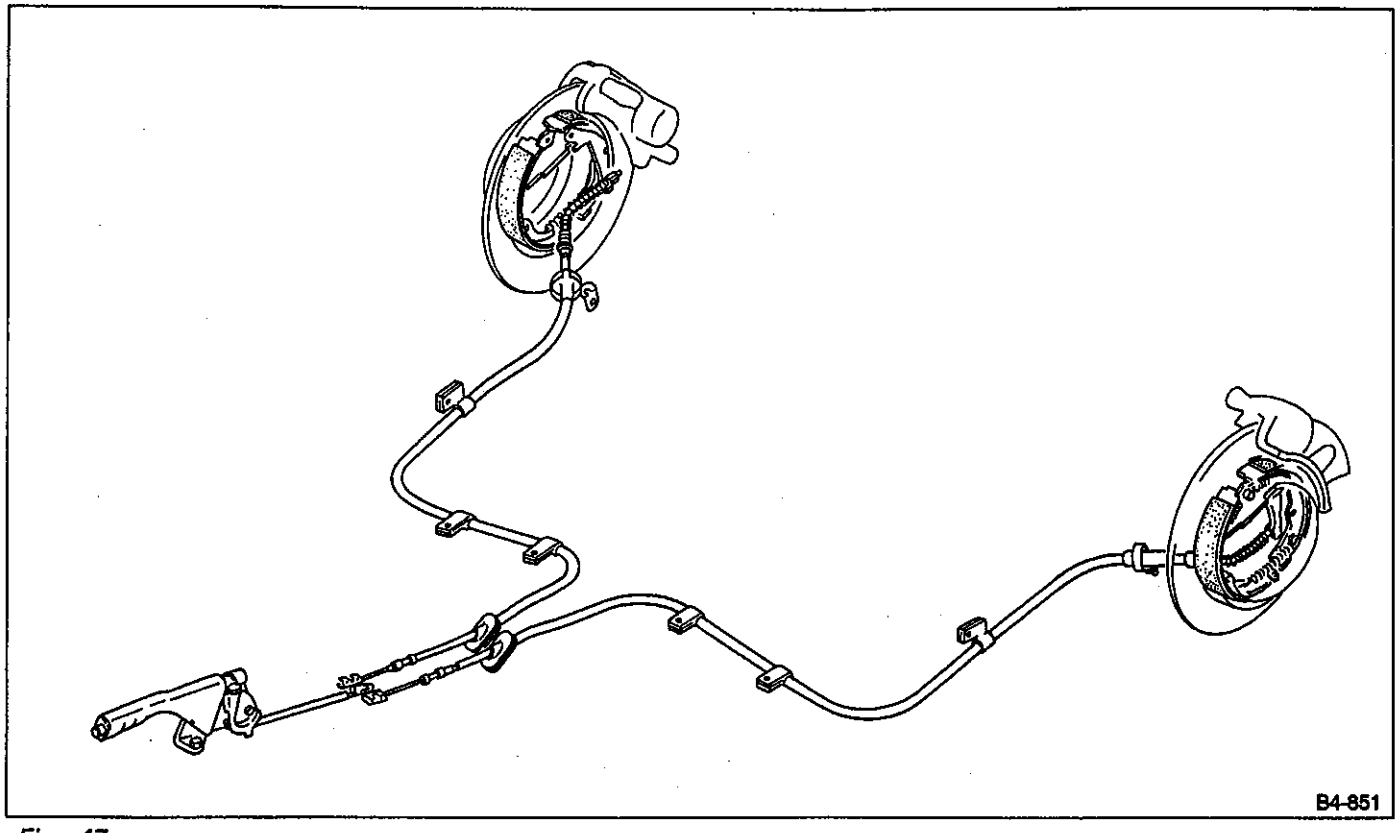

Fig. 47

B: OPERATION

1. PARKING BRAKE APPLICATION

When the parking brake lever is moved back, lever ② located on the end of the parking brake cable ① moves strut ③ in the direction of "A" with point "P" utilized as a fulcrum.
The strut then presses brake shoes ④ and ⑤ against the drum. These brake shoes utilize a floating design and are lightly supported by hold-down pins ⑦. The force applied to brake shoe ④, and the reaction force of "A" applied to brake shoe ⑤ via point "P" provide brake application when the shoes are pressed against the brake drum.

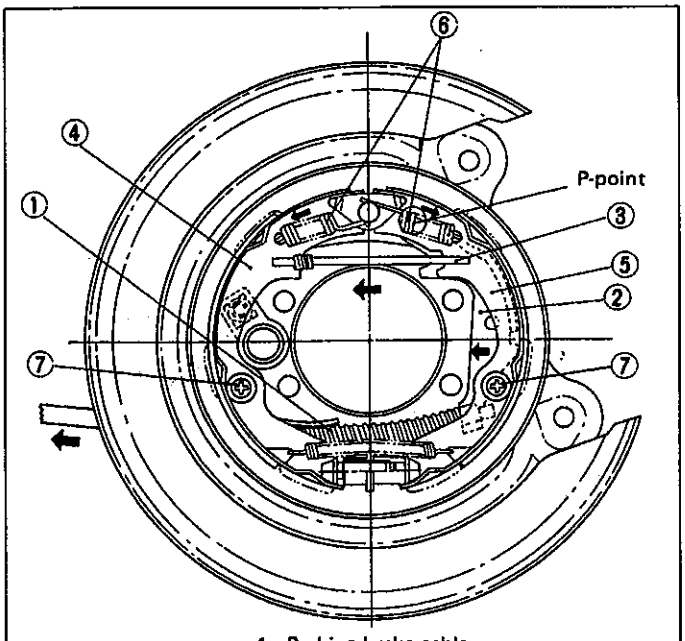

1 Parking brake cable
2 Lever
3 Strut
4 Brake shoe A
5 Brake shoe B
6 Shoe return spring
7 Shoe hold down pin
C4-516

Fig. 48

2. PARKING BRAKE RELEASE

When the parking brake lever is moved forward, parking brake cable ① is loosened. This returns brake shoes ④ and ⑤ to their original position from the tension of return spring ⑥ so that the parking brake is released.

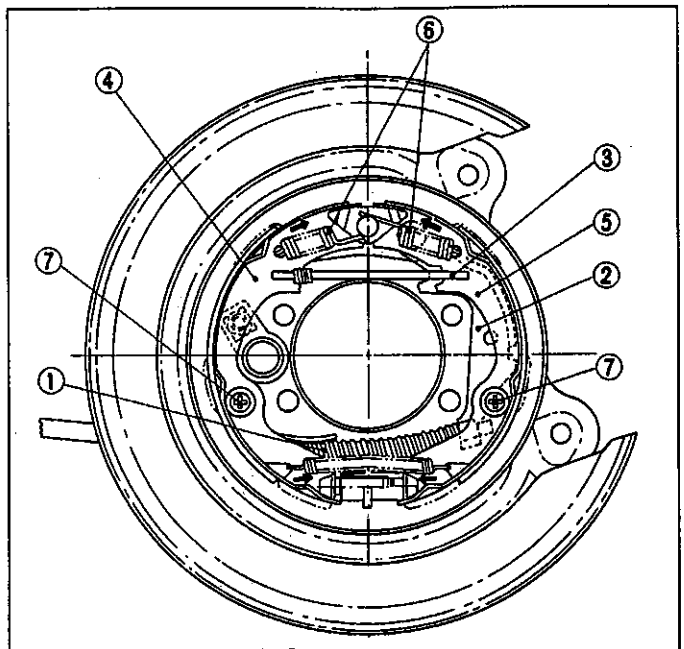

1 Parking brake cable
2 Lever
3 Strut
4 Brake shoe A
5 Brake shoe B
6 Shoe return spring
7 Shoe hold down pin
C4-517

Fig. 49

10. Parking Brake (Rear Drum Brake)

When the parking brake lever is moved up, a lever in the drum brake moves with point "A" as a fulcrum so that the trailing shoe expands. The leading shoe also expands by way of the adjuster ASSY. In this way, braking force will occur.

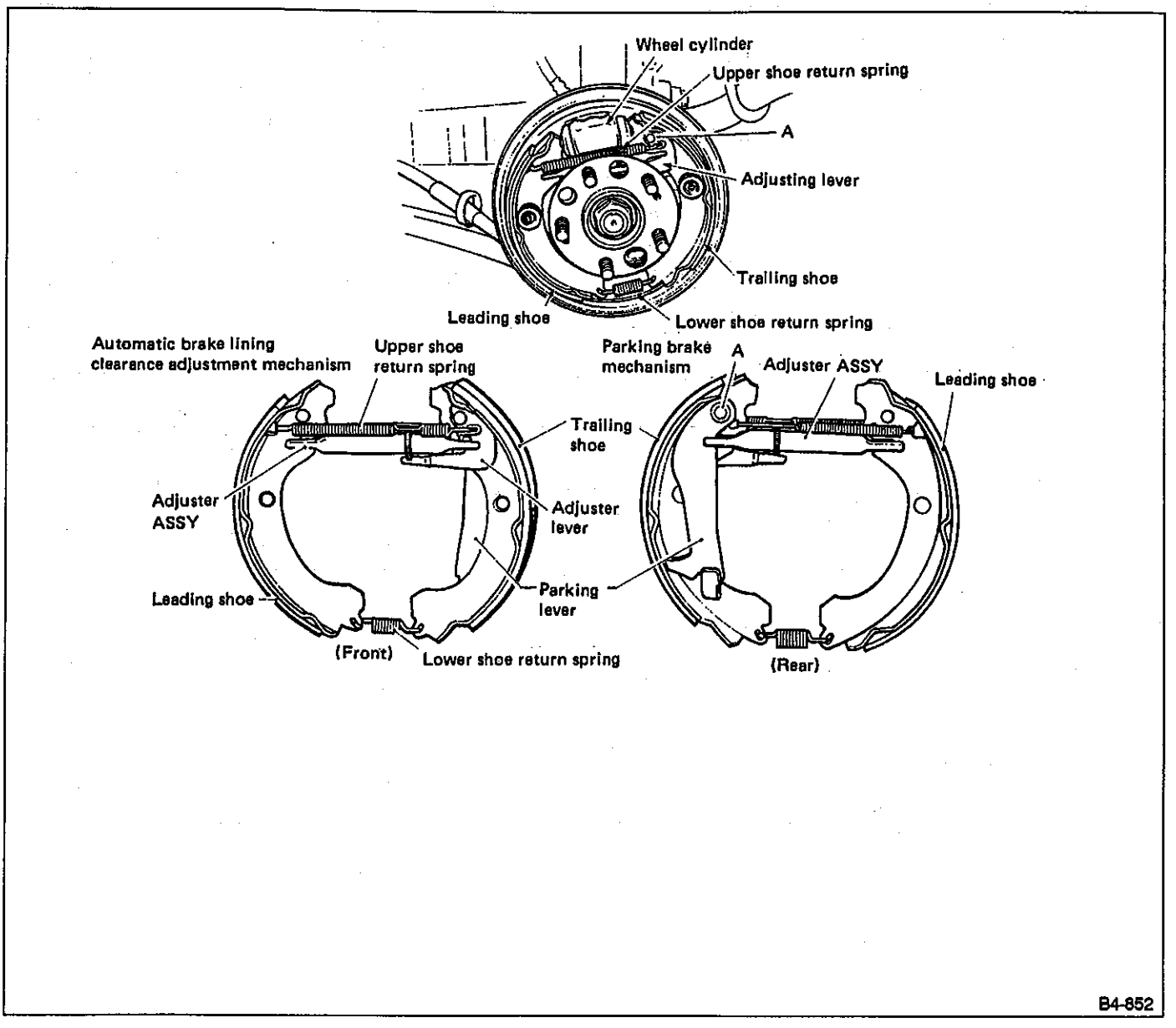

Fig. 50

S SPECIFICATIONS AND SERVICE DATA

A: SPECIFICATIONS

	Model	4-Door Sedan										
	Engine (cc)	1600		1800				2000			2200	
	Driving system	FWD				4WD		FWD	4WD		FWD	4WD
		DL	GL	DL	GL	DL	GL	GL	GL	TURBO	GX	GX
Front brake	Type	Disc (Floating type, ventilated)										
	Effective disc diameter mm (in)	194 (7.64)	210 (8.27)	194 (7.64)	210 (8.27)					228 (8.98)	210 (8.27)	
	Disc thickness x Outer diameter mm (in)	18 x 242 (0.71 x 9.53)	24 x 260 (0.94 x 10.24)	18 x 242 (0.71 x 9.53)	24 x 260 (0.94 x 10.24)					24 x 277 (0.94 x 10.91)	24 x 260 (0.94 x 10.24)	
	Effective cylinder diameter mm (in)	57.2 (2.252)								42.8 x 2 (1.685 x 0.08)	57.2 (2.252)	
	Pad dimensions (length x width x thickness) mm (in)	112.4 x 44.3 x 11.0 (4.43 x 1.744 x 0.433)								112.3 x 50 x 11 (4.42 x 1.97 x 0.43)	112.4 x 44.3 x 11.0 (4.43 x 1.744 x 0.433)	
	Clearance adjustment	Automatic adjustment										
Rear brake	Type	Drum (Leading-Trailing type)				Drum (Leading-Trailing type) [Disc (Floating type)]				Disc (floating type, ventilated)	Disc (Floating type)	
	Effective drum or disc diameter mm (in)	228.6 (9)				228.6 (9) [230 (9.06)]				230 (9.06)	230 (9.06)	
	Disc thickness x Outer diameter mm (in)	—				— [10 x 266 (0.39 x 10.47)]				18 x 266 (0.71 x 10.47)	10 x 266 (0.39 x 10.47)	
	Effective cylinder diameter mm (in)	17.4 (0.685)				17.4 (0.685) [34.9 (1.374)]				38.1 (1.500)	34.9 (1.374)	
	Lining or pad dimensions (length x width x thickness mm (in)	218.8 x 35.0 x 4.1 (8.61 x 1.378 x 0.161)				218.8 x 35.0 x 4.1 (8.61 x 1.378 x 0.161) [92.4 x 33.7 x 10.0 (3.638 x 1.327 x 0.394)]				92.4 x 33.7 x 10.0 (3.638 x 1.327 x 0.394)	92.4 x 33.7 x 10.0 (3.638 x 1.327 x 0.394)	
	Clearance adjustment	Automatic adjustment										

[ ]: ABS equipped vehicle

	Model	Station Wagon						Touring Wagon					
	Engine (cc)	1600	1800			2000		1600	1800	2000		2200	
	Driving system	FWD			4WD	FWD	4WD	FWD	4WD	4WD		FWD	4WD
		DL	DL	GL	DL	GL	DL	GL	GL	GL	TURBO	GX	GX
Front brake	Type	Disc (Floating type, ventilated)											
	Effective disc diameter mm (in)	194 (7.64)		210 (8.27)							228 (8.98)	210 (8.27)	
	Disc thickness x Outer diameter mm (in)	18 x 242 (0.71 x 9.53)		24 x 260 (0.94 x 10.24)							24 x 277 (0.94 x 10.91)	24 x 260 (0.94 x 10.24)	
	Effective cylinder diameter mm (in)	57.2 (2.252)									42.8 x 2 (1.685 x 0.08)	52.2 (2.055)	
	Pad dimensions (length x width x thickness) mm (in)	112.4 x 44.3 x 11.0 (4.43 x 1.744 x 0.433)									112.3 x 50 x 11 (4.42 x 1.97 x 0.43)	112.4 x 44.3 x 11.0 (4.43 x 1.744 x 0.433)	
	Clearance adjustment	Automatic adjustment											
Rear brake	Type	Drum (Leading-Trailing type)			Drum (Leading-Trailing type) [Disc (Floating type)]			Drum (Leading-Trailing type)	Drum (Leading-Trailing type) [Disc (Floating type)]		Disc (floating type, ventilated)	Disc (Floating type)	
	Effective drum or disc diameter mm (in)	228.6 (9)			228.6 (9) [230 (9.06)]			228.6 (9)	228.6 (9) [230 (9.06)]		230 (9.06)	230 (9.06)	
	Disc thickness x Outer diameter mm (in)	—			— [10 x 266 (0.39 x 10.47)]			—	— [10 x 266 (0.39 x 10.47)]		18 x 266 (0.71 x 10.47)	10 x 266 (0.39 x 10.47)	
	Effective cylinder diameter mm (in)	19.0 (0.748)			19.0 (0.748) [38.1 (1.500)]			19.0 (0.748)	19.0 (0.748) [38.1 (1.500)]		38.1 (1.500)	38.1 (1.500)	
	Lining or pad dimensions (length x width x thickness mm (in)	218.8 x 35.0 x 4.1 (8.61 x 1.378 x 0.161)			218.8 x 35.0 x 4.1 (8.61 x 1.378 x 0.161) [92.4 x 33.7 x 10.0 (3.638 x 1.327 x 0.394)]			218.8 x 35.0 x 4.1 (8.61 x 1.378 x 0.161)	218.8 x 35.0 x 4.1 (8.61 x 1.378 x 0.161) [92.4 x 33.7 x 10.0 (3.638 x 1.327 x 0.394)]		92.4 x 33.7 x 10.0 (3.638 x 1.327 x 0.394)	92.4 x 33.7 x 10.0 (3.638 x 1.327 x 0.394)	
	Clearance adjustment	Automatic adjustment											

[ ]: ABS equipped vehicle

	Model	4-Door Sedan										
	Engine (cc)	1600		1800				2000			2200	
	Driving system	FWD				4WD		FWD	4WD		FWD	4WD
		DL	GL	DL	GL	DL	GL	GL	GL	TURBO	GX	GX
Parking brake	Type	Mechanical on rear brakes, drum										
	Effective drum diameter mm (in)	228.6 (9)				228.6 (9) [170 (6.69)]				170 (6.69)		
	Lining dimensions (length x width x thickness) mm (in)	218.8 x 35.0 x 4.1 (8.61 x 1.378 x 0.161)				218.8 x 35.0 x 4.1 (8.61 x 1.378 x 0.161) [162.6 x 30.0 x 3.2 (6.40 x 1.181 x 0.126)]				162.6 x 30.0 x 3.2 (6.40 x 1.181 x 0.126)		
	Clearance adjustment	Automatic adjustment				Automatic adjustment [Manual adjustment]				Manual adjustment		
Master cylinder	Type	Tandem										
	Effective diameter mm (in)	23.81 (15/16)				23.81 (15/16) [26.99 (1-1/16)]				25.40 (1) [26.99 (1-1/16)]		
	Reservoir type	Sealed type										
	Brake fluid reservoir capacity cm^3 (cu in)	190 (11.59)										
Brake booster	Type	Vacuum suspended										
	Effective diameter mm (in)	230 (9.06)				230 (9.06) [205 + 230 (8.07 + 9.06)]				180 + 205 (7.09 + 8.07) [205 + 230 (8.07 + 9.06)]		
Proportioning valve	Split point kPa (kg/cm^2, psi)	3,678 (37.5, 533)				3,678 (37.5, 533) [3,678 (37.5, 533)]						
	Reducing ratio	0.3										
Brake line		Dual circuit system										
Hill-holder		Equipped on manual transmission vehicle (Except TURBO model)										
ABS		NA				OP						

[ ]: ABS equipped vehicle

	Model	Station Wagon						Touring Wagon					
	Engine (cc)	1600	1800			2000		1600	1800	2000		2200	
	Driving system	FWD			4WD	FWD	4WD	FWD	4WD	4WD		FWD	4WD
		DL	DL	GL	DL	GL	DL	GL	GL	GL	TURBO	GX	GX
Parking brake	Type	Mechanical on rear brakes, drum											
	Effective drum diameter mm (in)	228.6 (9)			228.6 (9) [170 (6.69)]			228.6 (9)	228.6 (9) [170 (6.69)]	170 (6.69)			
	Lining dimensions (length x width x thickness) mm (in)	218.8 x 35.0 x 4.1 (8.61 x 1.378 x 0.161)			218.8 x 35.0 x 4.1 (8.61 x 1.378 x 0.161) [162.6 x 30.0 x 3.2 (6.40 x 1.181 x 0.126)]			218.8 x 35.0 x 4.1 (8.61 x 1.378 x 0.161)	218.8 x 35.0 x 4.1 (8.61 x 1.378 x 0.161) [162.6 x 30.0 x 3.2 (6.40 x 1.181 x 0.126)]	162.6 x 30.0 x 3.2 (6.40 x 1.181 x 0.126)			
	Clearance adjustment	Automatic adjustment			Automatic adjustment [Manual adjustment]			Automatic adjustment	Automatic adjustment [Manual adjustment]	Manual adjustment			
Master cylinder	Type	Tandem											
	Effective diameter mm (in)	23.81 (15/16)			23.81 (15/16) [26.99 (1-1/16)]			23.81 (15/16)	23.81 (15/16) [26.99 (1-1/16)]	25.40 (1) [26.99 (1-1/16)]			
	Reservoir type	Sealed type											
	Brake fluid reservoir capacity cm^3 (cu in)	190 (11.59)											
Brake booster	Type	Vacuum suspended											
	Effective diameter mm (in)	230 (9.06)			230 (9.06) [205 + 230 (8.07 + 9.06)]			230 (9.06)	230 (9.06) [205 + 230 (8.07 + 9.06)]	180 + 205 (7.09 + 8.07) [205 + 230 (8.07 + 9.06)]			
Proportioning valve	Split point kPa (kg/cm^2, psi)	3,678 (37.5, 533)			3,678 (37.5, 533) [3,678 (37.5, 533)]			3,678 (37.5, 533)	3,678 (37.5, 533) [4,413 (45, 640)]	4,413 (45, 640) [4,413 (45, 640)]			
	Reducing ratio	0.3											
Brake line		Dual circuit system											
Hill-holder		Equipped on manual transmission vehicle (Except TURBO model)											
ABS		NA			OP			NA	OP				

[ ]: ABS equipped vehicle

B: SERVICE DATA

ITEM		STANDARD	SERVICE LIMIT
Front brake	Pad thickness (including back metal)	17 mm (0.67 in)	7.5 mm (0.295 in)
	Disc thickness	13-inch type: 18 mm (0.71 in) 14-inch type: 24 mm (0.94 in) 15-inch type: 24 mm (0.94 in)	13-inch type: 16 mm (0.63 in) 14-inch type: 22 mm (0.87 in) 15-inch type: 22 mm (0.87 in)
	Disc run-out	—	0.10 mm (0.0039 in)
Rear brake (Disc type)	Pad thickness (including back metal)	15 mm (0.59 in)	6.5 mm (0.256 in)
	Disc thickness	Solid type: 10 mm (0.39 in) Ventilated type: 18 mm (0.71 in)	Solid type: 8.5 mm (0.335 in) Ventilated type: 16 mm (0.63 in)
	Disc run-out	—	0.10 mm (0.0039 in)
Rear brake (Drum type)	Inside diameter	228.6 mm (9 in)	230.6 mm (9.079 in)
	Lining thickness	4.1 mm (0.161 in)	1.5 mm (0.059 in)
Rear brake (Disc type Parking)	Inside diameter	170 mm (6.69 in)	171 mm (6.73 in)
	Lining thickness	3.2 mm (0.126 in)	1.5 mm (0.059 in)
Parking brake	lever stroke	7 to 8 notches/196N (20 kg,44 lb)	

			DL•GL	GX	TURBO	DL•GL•GX with ABS	TURBO with ABS
Brake booster		Brake pedal force	Fluid pressure				
	Brake fluid pressure without engine running	147N (15 kg, 33 lb)	785 kPa (8 kg/cm², 114 psi)	588 kPa (6 kg/cm², 85 psi)	588 kPa (6 kg/cm², 85 psi)	588 kPa (6 kg/cm², 85 psi)	588 kPa (6 kg/cm², 85 psi)
		294N (30kg, 66 lb)	2,158 kPa (22 kg/cm², 313 psi)	1,863 kPa (19 kg/cm², 270 psi)	1,863 kPa (19 kg/cm², 270 psi)	1,667 kPa (17 kg/cm², 242 psi)	1,667 kPa (17 kg/cm², 242 psi)
	Brake fluid pressure with engine running and vacuum at 66.7 kPa (500 mmHg, 19.69 inHg)	147N (15 kg, 33 lb)	5,492 kPa (56 kg/cm², 796 psi)	5,394 kPa (55 kg/cm², 782 psi)	4,904 kPa (50 kg/cm², 711 psi)	5,394 kPa (55 kg/cm², 782 psi)	5,002 kPa (51 kg/cm², 725 psi)
		294N (30kg, 66 lb)	8,434 kPa (86 kg/cm², 1,223 psi)	9,219 kPa (94 kg/cm², 1,337 psi)	9,219 kPa (94 kg/cm², 1,337 psi)	10,003 kPa (102 kg/cm², 1,450 psi)	10,003 kPa (102 kg/cm², 1,450 psi)

C: RECOMMENDED BRAKE FLUID

FMVSS No. 116, fresh DOT3 or 4 brake fluid

a. Avoid mixing brake fluid of different brands to prevent the fluid performance from degrading.
b. When brake fluid is supplemented, be careful not to allow any dust into the reservoir.
c. Use fresh DOT3 or 4 brake fluid when replacing or refilling the fluid.

D: BRAKE FLUID LEVEL INDICATOR

Reserve tank with level indicator:
Residual fluid quantity at light ON
Approx. 80 cm³ (80cc, 4.88 cu in)
Tank capacity
190 cm³ (190cc, 11.59 cu in)

C COMPONENT PARTS

1. Front Disc Brake

1. TURBO MODEL

1 Lock pin
2 Caliper body
3 Air bleeder screw
4 Guide pin boot
5 Lock pin boot
6 Lock pin sleeve
7 Piston
8 Piston boot
9 Boot ring
10 Pad clip
11 Support
12 Housing
13 Shim
14 Rubber-coated shim
15 Inner pad
16 Disc cover
17 Outer pad
18 Disc rotor
19 Piston seal

Tightening torque: N•m (kg-m, ft-lb)
T1: 34 — 44 (3.5 — 4.5, 25 — 33)
T2: 7 — 9 (0.7 — 0.9, 5.1 — 6.5)
T3: 69 — 88 (7 — 9, 51 — 65)
T4: 10 — 18 (1.0 — 1.8, 7 — 13)

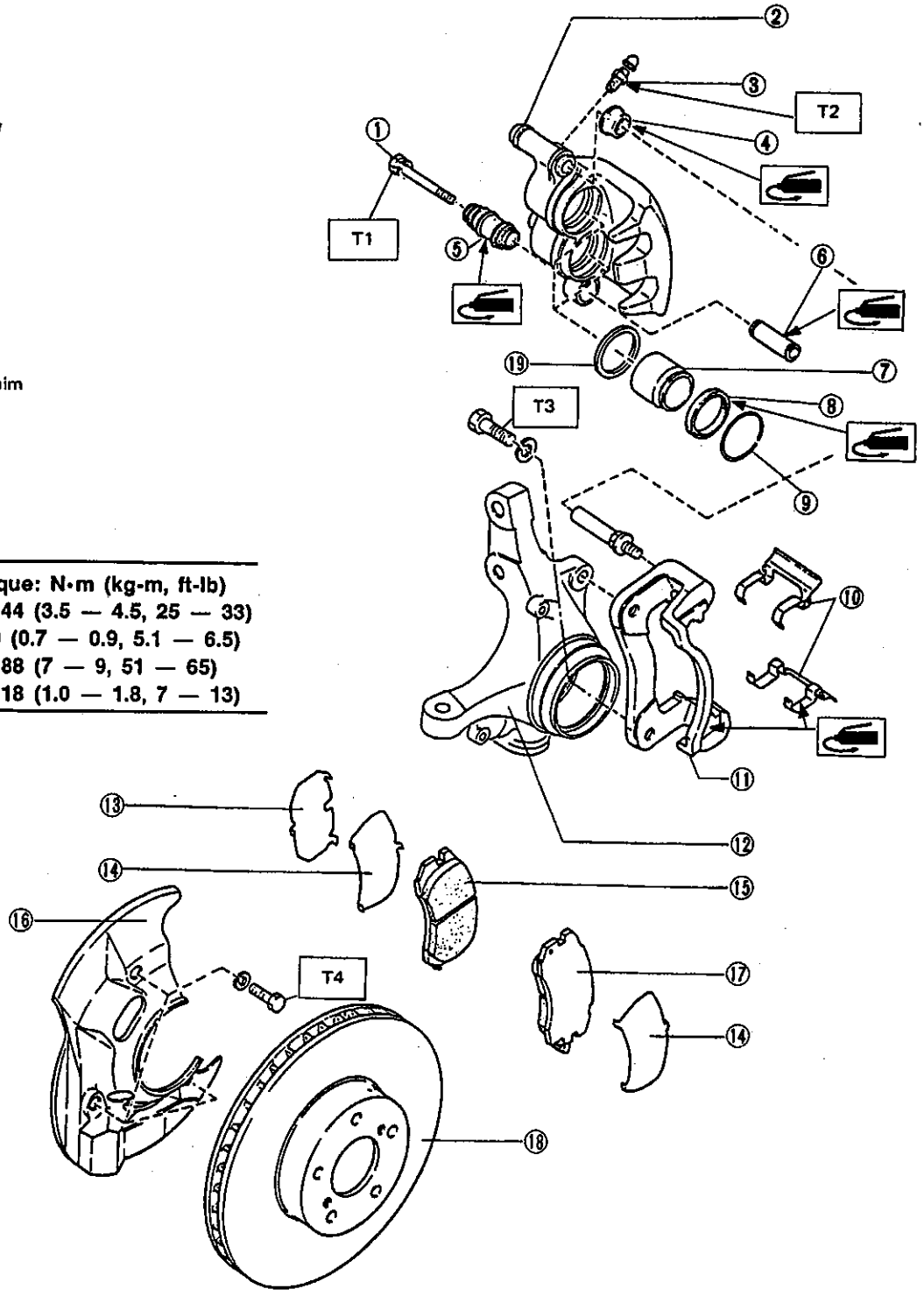

Fig. 51

2. NON-TURBO MODEL

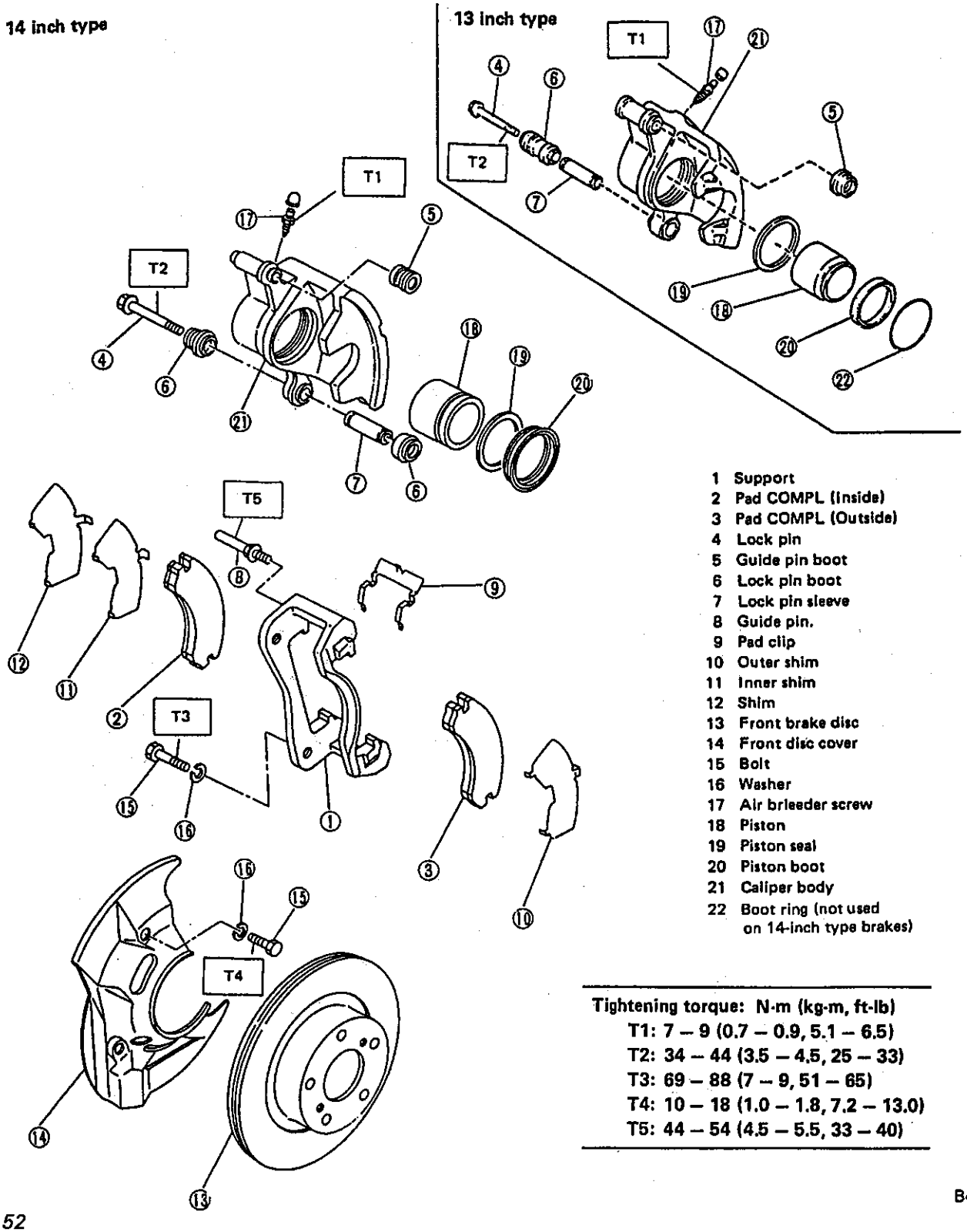

1 Support
2 Pad COMPL (Inside)
3 Pad COMPL (Outside)
4 Lock pin
5 Guide pin boot
6 Lock pin boot
7 Lock pin sleeve
8 Guide pin.
9 Pad clip
10 Outer shim
11 Inner shim
12 Shim
13 Front brake disc
14 Front disc cover
15 Bolt
16 Washer
17 Air brleeder screw
18 Piston
19 Piston seal
20 Piston boot
21 Caliper body
22 Boot ring (not used on 14-inch type brakes)

Tightening torque: N·m (kg·m, ft·lb)
T1: 7 – 9 (0.7 – 0.9, 5.1 – 6.5)
T2: 34 – 44 (3.5 – 4.5, 25 – 33)
T3: 69 – 88 (7 – 9, 51 – 65)
T4: 10 – 18 (1.0 – 1.8, 7.2 – 13.0)
T5: 44 – 54 (4.5 – 5.5, 33 – 40)

B4-361L

Fig. 52

2. Rear Disc Brake

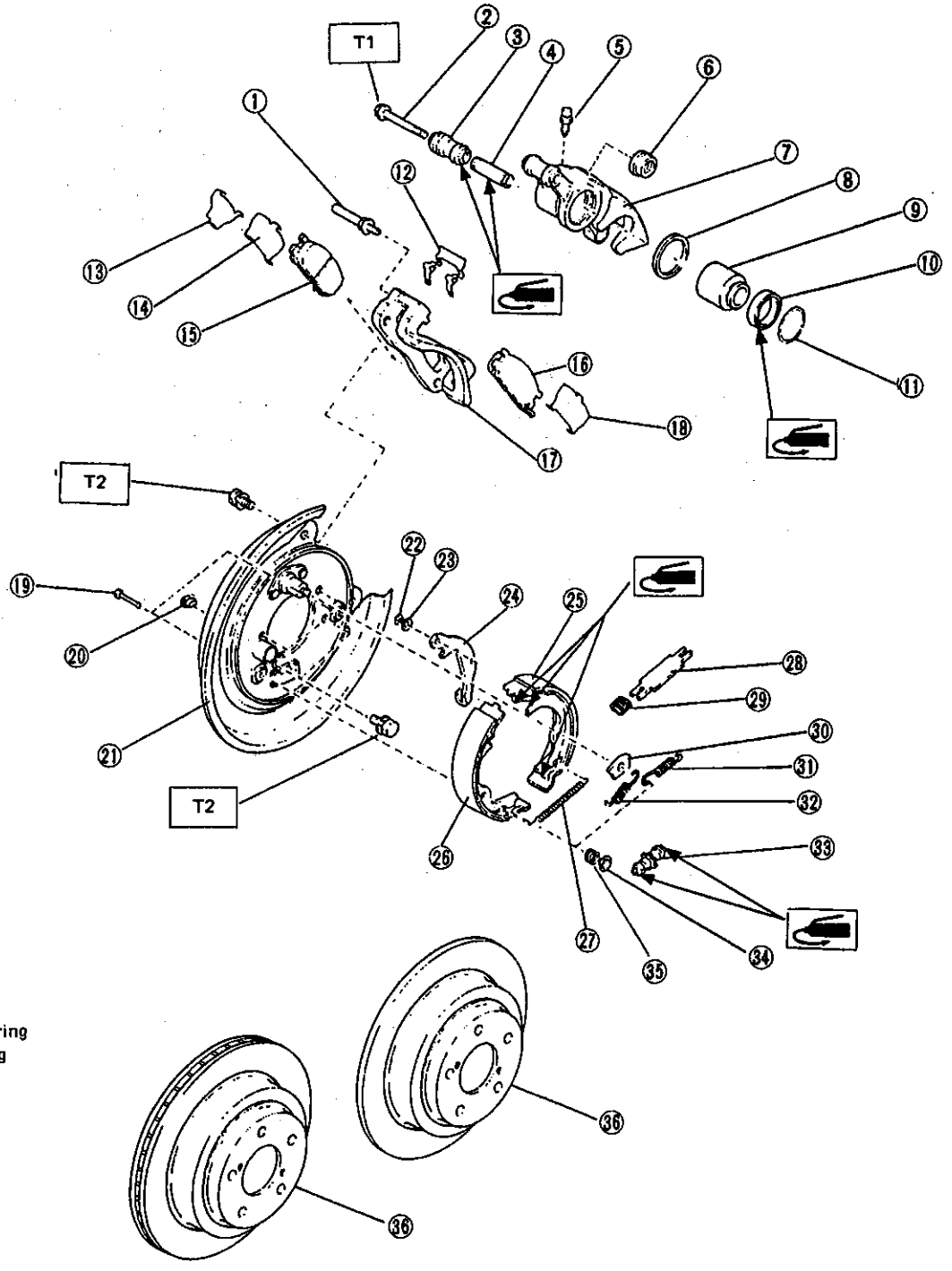

1 Guide pin
2 Lock pin
3 Lock pin boot
4 Lock pin sleeve
5 Air bleeder screw
6 Guide pin boot
7 Caliper body
8 Piston seal
9 Piston
10 Piston boot
11 Boot ring
12 Pad clip
13 Shim
14 Inner shim
15 Inner pad
16 Outer pad
17 Support
18 Outer shim
19 Shoe hold down pin
20 Cover
21 Back plate
22 Retainer
23 Spring washer
24 Parking brake lever
25 Parking brake shoe (Secondary)
26 Parking brake shoe (Primary)
27 Adjusting spring
28 Strut
29 Strut shoe spring
30 Shoe guide plate
31 Secondary shoe return spring
32 Primary shoe return spring
33 Adjusting ASSY
34 Shoe hold down cup
35 Shoe hold down spring
36 Disc rotor

Tightening torque: N·m (kg·m, ft·lb)
T1: 16 – 24 (1.6 – 2.4, 12 – 17)
T2: 46 – 58 (4.7 – 5.9, 34 – 43)

B4-1335

Fig. 53

3. Rear Drum Brake

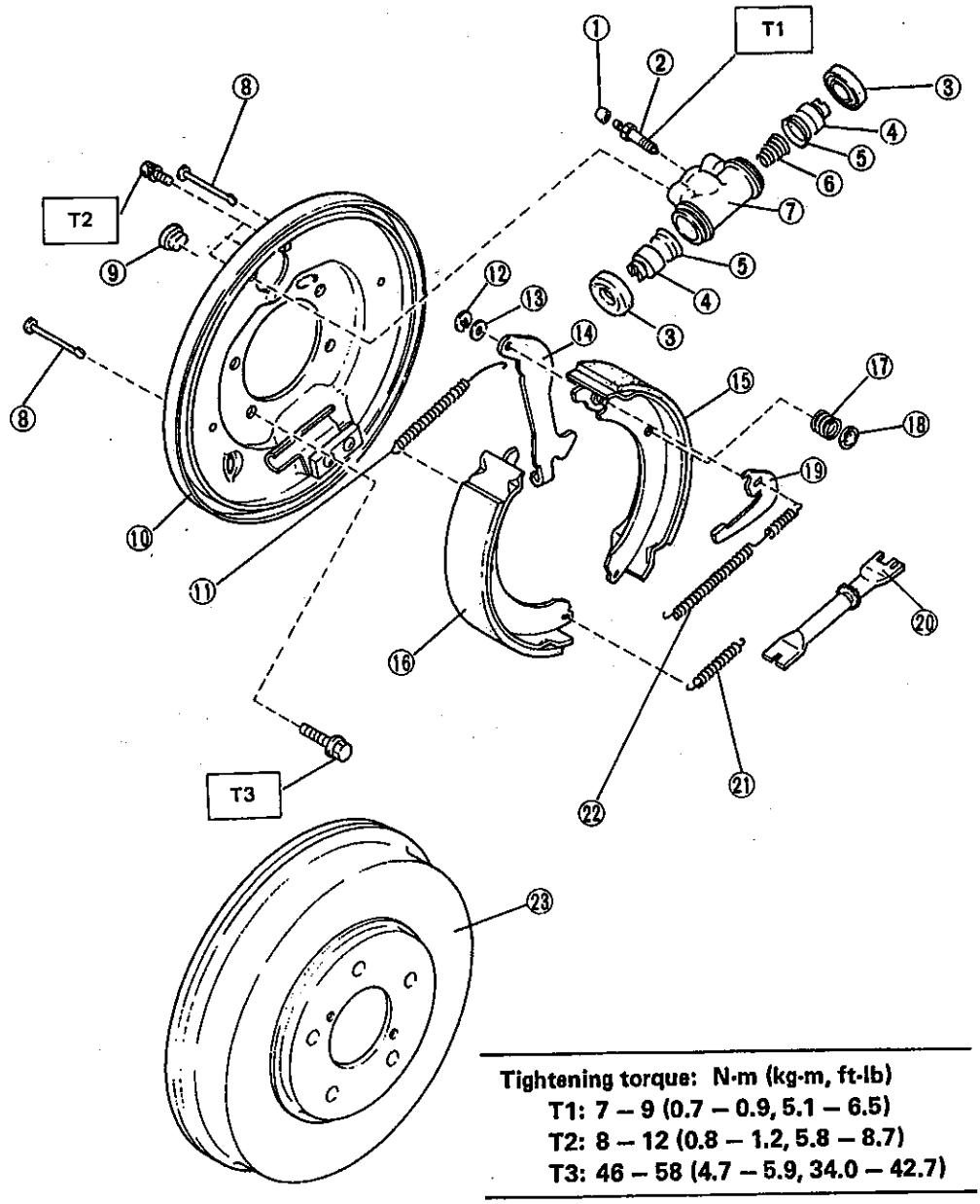

Tightening torque: N·m (kg·m, ft·lb)
T1: 7 – 9 (0.7 – 0.9, 5.1 – 6.5)
T2: 8 – 12 (0.8 – 1.2, 5.8 – 8.7)
T3: 46 – 58 (4.7 – 5.9, 34.0 – 42.7)

1 Air bleeder cap
2 Air bleeder screw
3 Boot
4 Piston
5 Cup
6 Spring
7 Wheel cylinder body
8 Pin
9 Plug
10 Back plate
11 Upper shoe return spring
12 Retainer
13 Wahser
14 Parking brake lever
15 Brake shoe (Trailing)
16 Brake shoe (Leading)
17 Shoe hold down spring
18 Cup
19 Adjuster lever
20 Adjuster ASSY
21 Lower shoe return spring
22 Adjuster spring
23 Drum

B4-854

Fig. 54

4. Master Cylinder

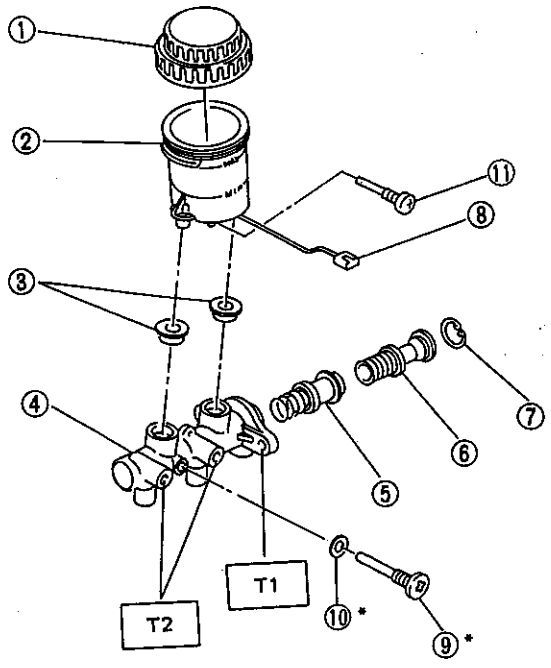

1 Cap
2 Reserve tank
3 Seal
4 Cylinder body
5 Secondary piston
6 Primary piston
7 C-ring
8 Level indicator ASSY
* 9 Secondary piston stopper
*10 Gasket
11 Reservoir stopper bolt

Tightening torque: N·m (kg-m, ft-lb)
T1: 10 – 18 (1.0 – 1.8, 7 – 13)
T2: 13 – 18 (1.3 – 1.8, 9 – 13)

*: ABS equipped vehicle only

B4-855

Fig. 55

5. Brake Booster

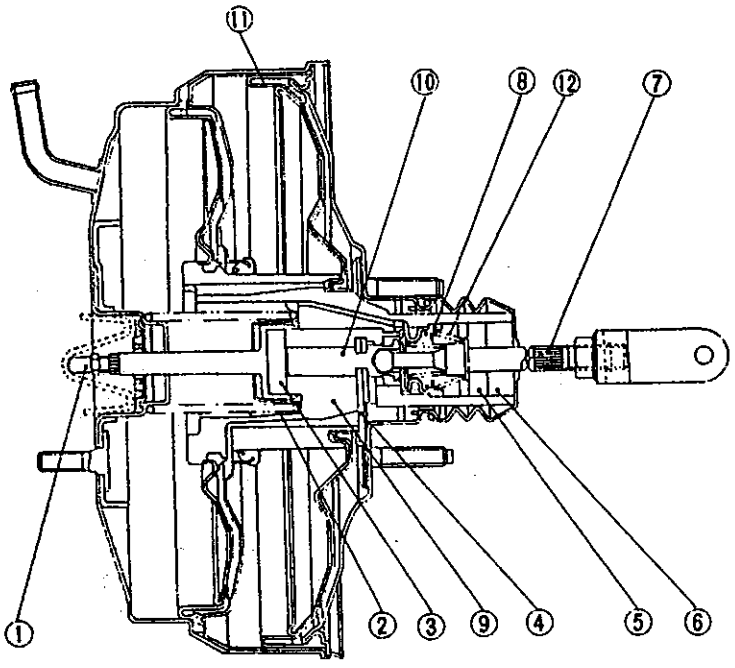

1 Push rod
2 Return spring
3 Reaction disc
4 Key
5 Filter
6 Silencer
7 Operating rod
8 Poppet valve
9 Valve body
10 Plunger valve
11 Diaphragm plate
12 Valve return spring

B4-1328

Fig. 56

6. ABS System

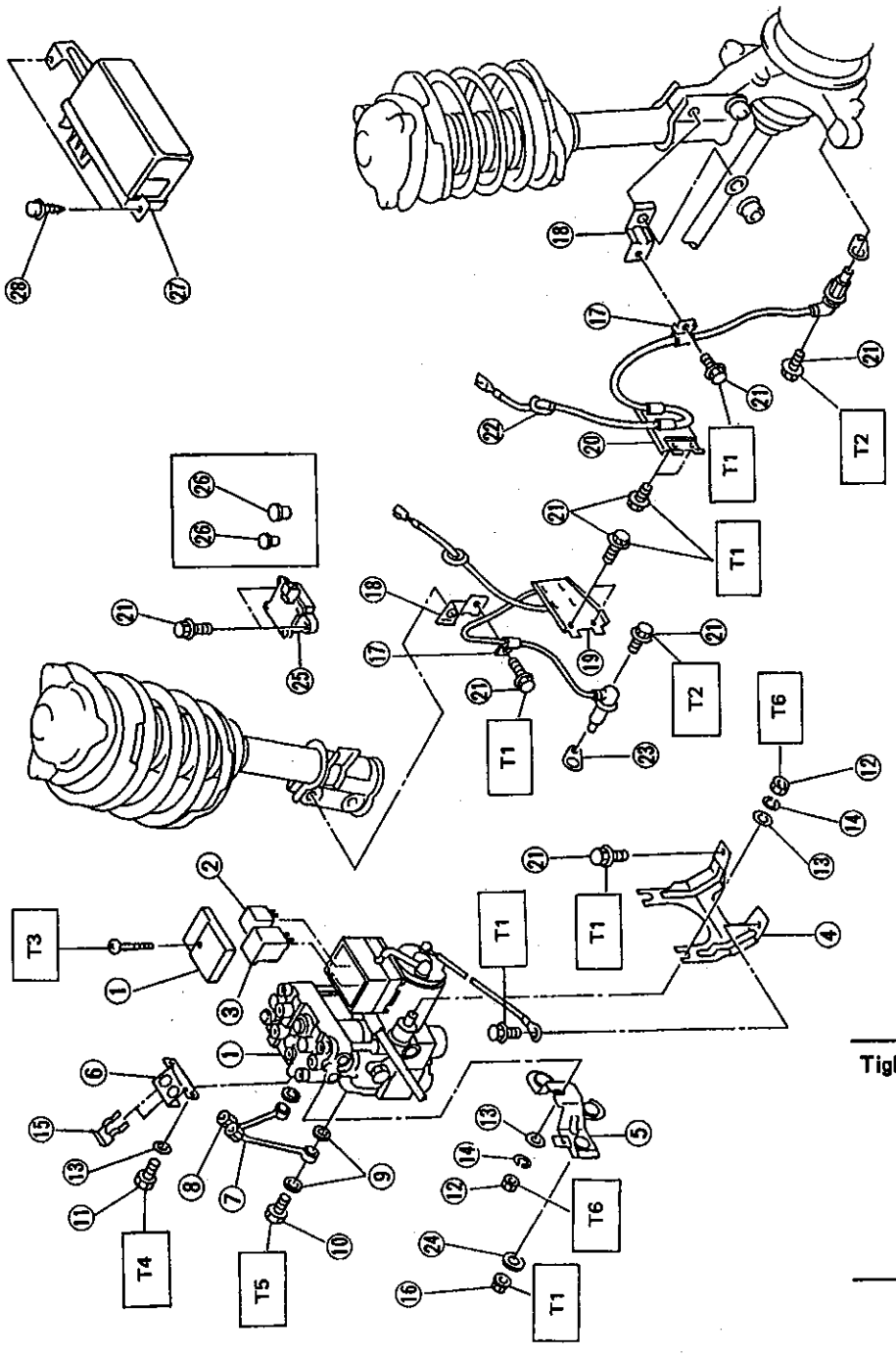

1 Hydraulic control unit ASSY
2 Motor relay
3 Valve relay
4 Hydraulic control unit bracket (A)
5 Hydraulic control unit bracket (B)
6 Joint bracket
7 Inlet joint RH
8 Inlet joint LH
9 Gasket
10 Union bolt
11 Socket bolt
12 Nut
13 Washer
14 Spring washer
15 Clamp
16 Flange nut
17 Front harness clamp
18 ABS harness bracket
19 Body COMPL bracket RH
20 Body COMPL bracket LH
21 Flange bolt
22 Grommet
23 ABS spacer
24 Spacer
25 G sensor
26 Plug
27 Electronic control unit ASSY
28 Screw

Tightening torque: N·m (kg-m, ft-lb)
T1: 23 – 42 (2.3 – 4.3, 17 – 31)
T2: 10 – 16 (1.0 – 1.6, 7 – 12)
T3: 1.2 – 1.5 (0.12 – 0.15, 0.9 – 1.1)
T4: 13 – 18 (1.3 – 1.8, 9 – 13)
T5: 15 – 20 (1.5 – 2.0, 11 – 14)
T6: 7 – 9 (0.7 – 0.9, 5.1 – 6.5)

B4-1497

Fig. 57 Front ABS system

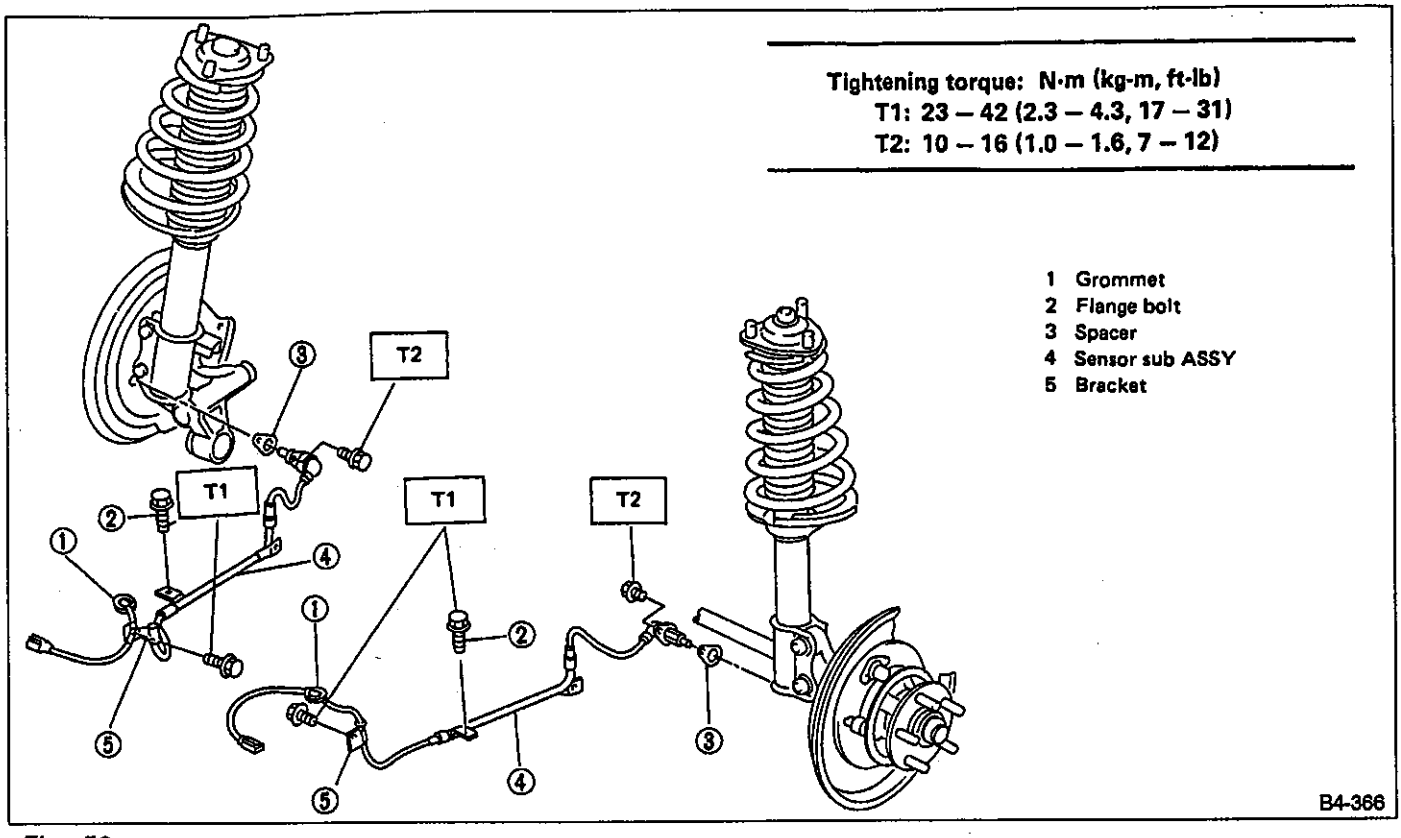

Fig. 58

7. Hill-Holder

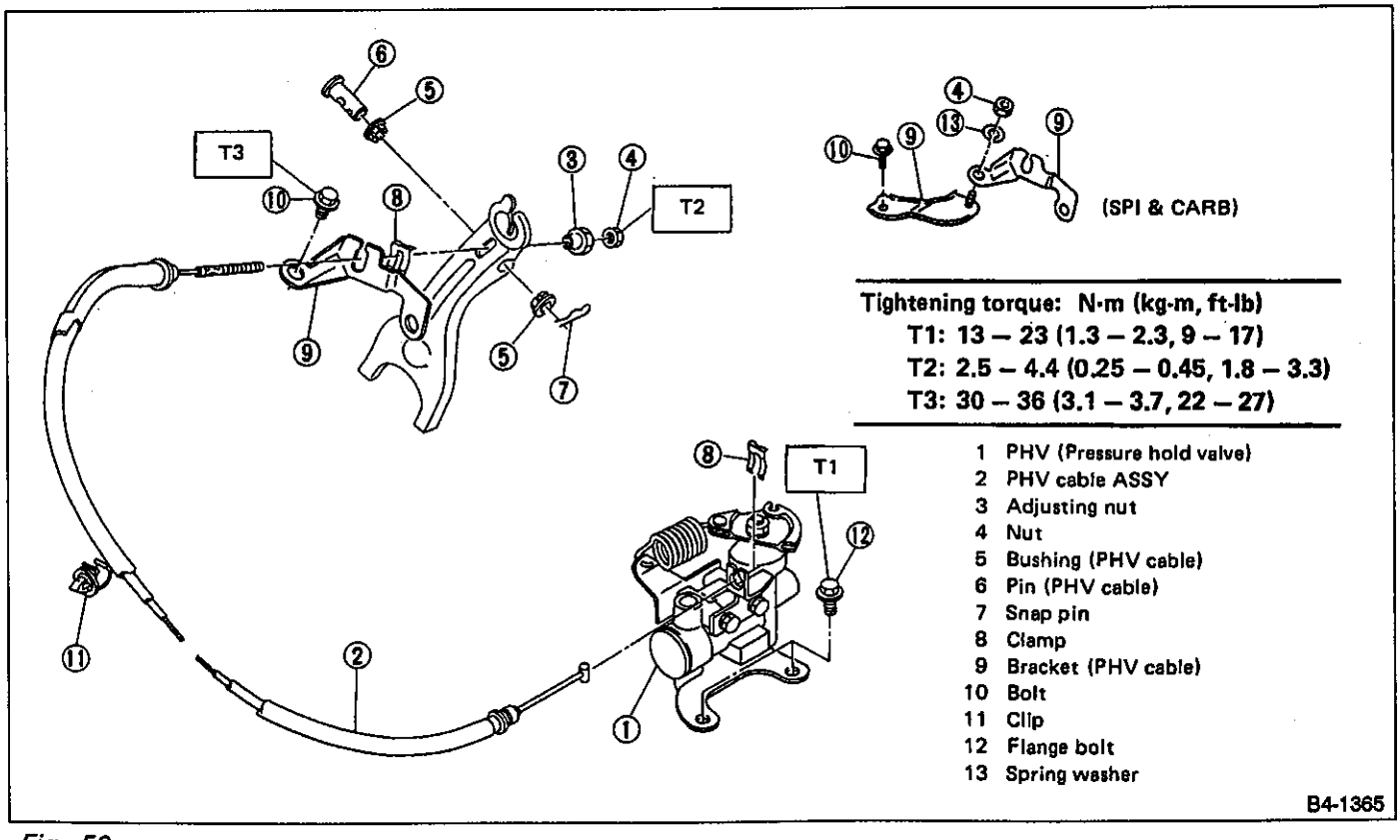

Fig. 59

8. Parking (Hand) Brake

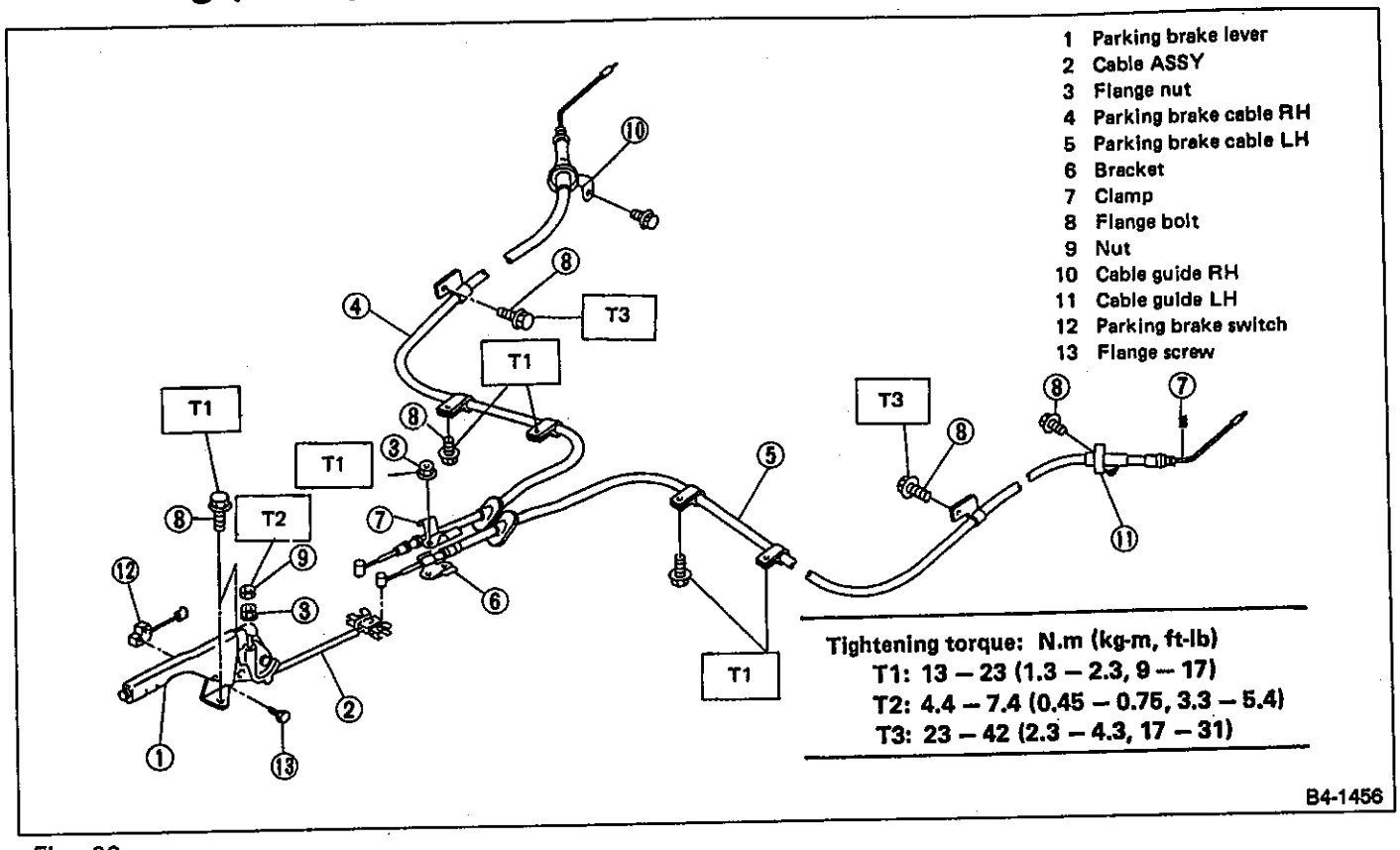

Fig. 60

W SERVICE PROCEDURE

1. Front Disc Brake

1. TURBO MODEL

1 Lock pin
2 Caliper body
3 Air bleeder screw
4 Guide pin boot
5 Lock pin boot
6 Lock pin sleeve
7 Piston
8 Piston boot
9 Boot ring
10 Pad clip
11 Support
12 Housing
13 Shim
14 Rubber-coated shim
15 Inner pad
16 Disc cover
17 Outer pad
18 Disc rotor
19 Piston seal

Tightening torque: N•m (kg-m, ft-lb)
T1: 34 — 44 (3.5 — 4.5, 25 — 33)
T2: 7 — 9 (0.7 — 0.9, 5.1 — 6.5)
T3: 69 — 88 (7 — 9, 51 — 65)
T4: 10 — 18 (1.0 — 1.8, 7 — 13)

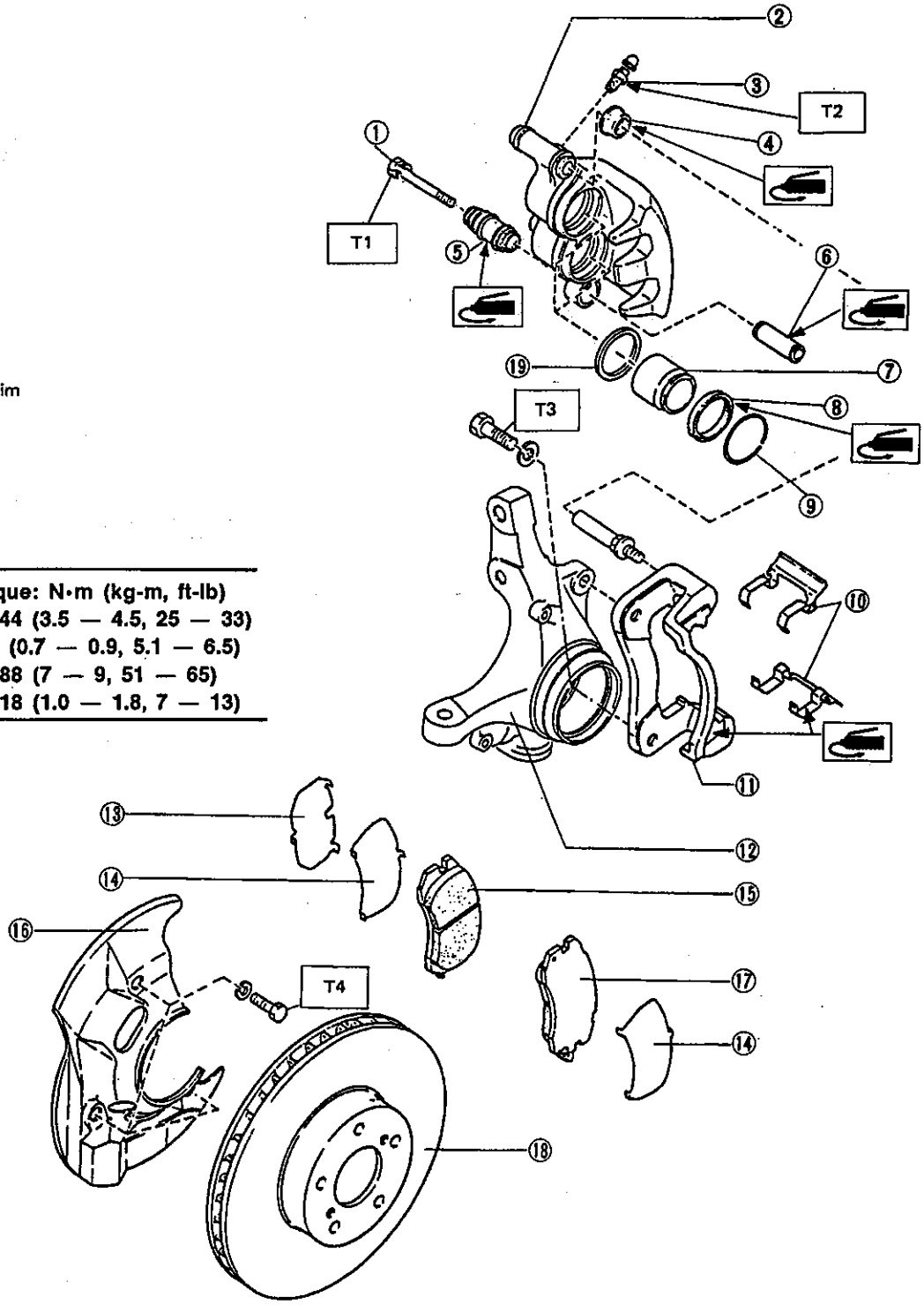

Fig. 61

2. NON-TURBO MODEL

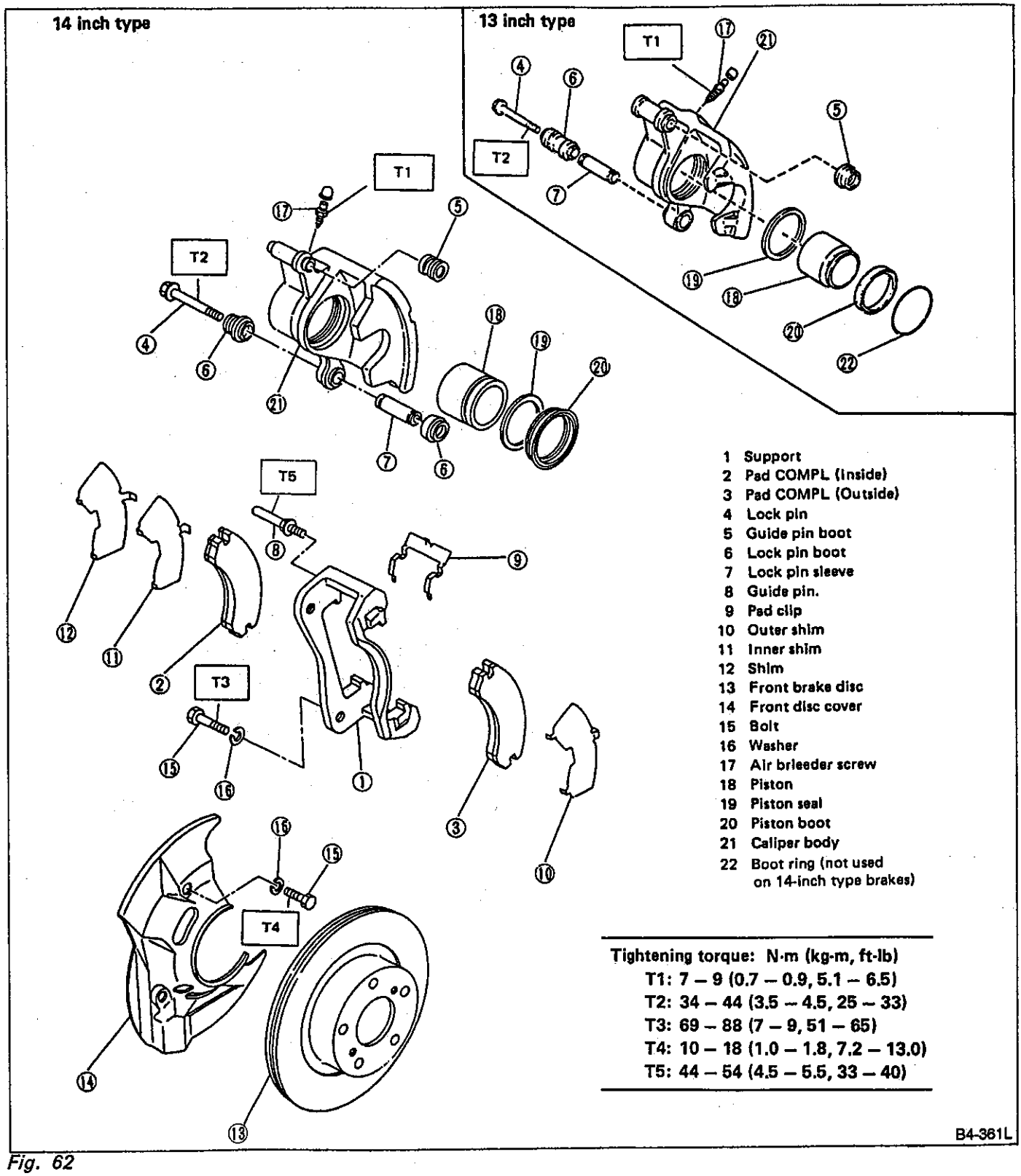

Fig. 62

A. ON-CAR SERVICE

1. PAD

1) Remove lock pin.
2) Raise caliper body.
3) Remove pad.

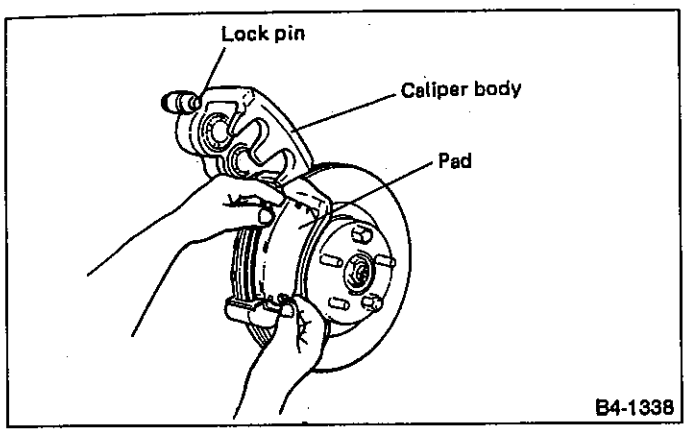

Fig. 63

4) Check pad thickness A.

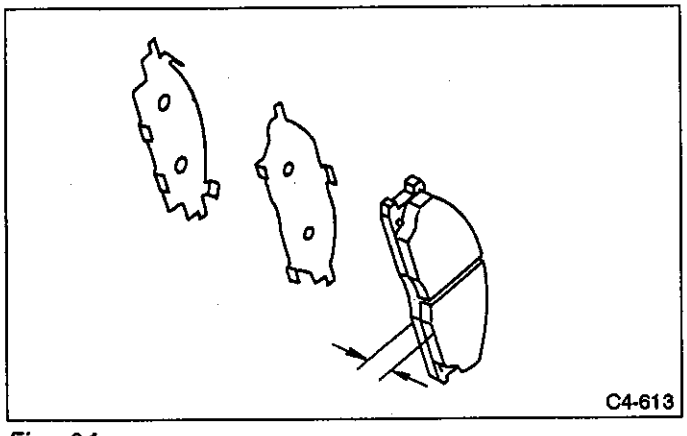

Fig. 64

Pad thickness (including back metal) mm (in)	Standard value	17 (0.67)
	Wear limit	7.5 (0.295)

a. Always replace the pads for both the left and right wheels at the same time. Also replace pad clips if they are twisted or worn.
b. A wear indicator is provided on the outer disc brake pad. If the pad wears down to such an extent that the end of the wear indicator contacts the disc rotor, a squeaking sound is produced as the wheel rotates. If this sound is heard, replace the pad.
c. Replace pad if there is oil or grease on it.

5) Apply thin coat of PBC GREASE (725191330 or 003607000) to the frictional portion between pad and pad clip.
6) Install pads on support.

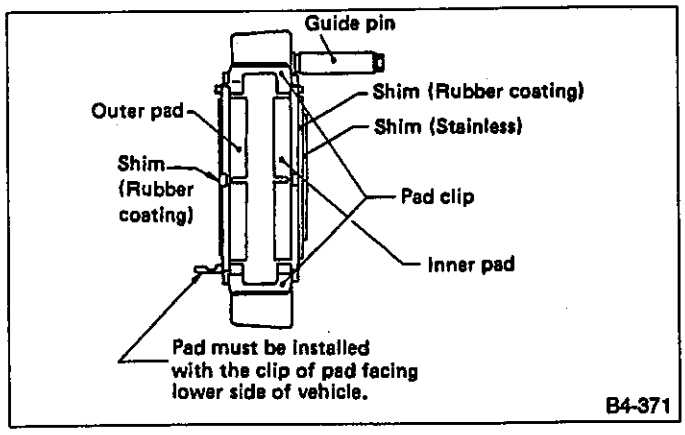

Fig. 65

7) Install caliper body on support.

If it is difficult to push piston during pad replacement, loosen air bleeder to facilitate work.

2. DISC ROTOR

1) Set a dial gauge on the disc rotor. Turn disc rotor to check runout.

Make sure that dial gauge is set 5 mm (0.20 in) inward of rotor outer perimeter.

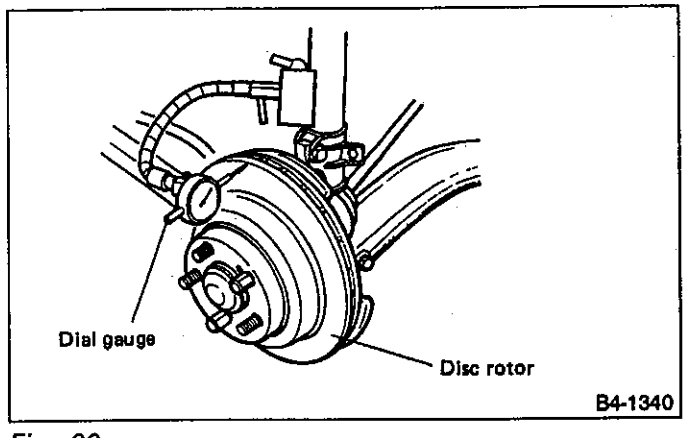

Fig. 66

Disc rotor runout limit:
0.1 mm (0.004 in)

2) Measure disc rotor thickness.

Make sure that micrometer is set 5 mm (0.20 in) inward of rotor outer perimeter.

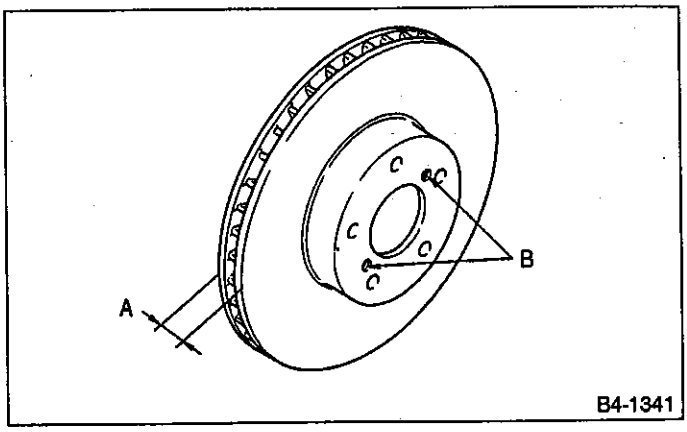

Fig. 67

	Tire dia.	Standard value	Service limit	Disc outside dia.
Disc rotor thickness A mm (in)	13″	18.0 (0.709)	16.0 (0.630)	242 (9.53)
	14″	24.0 (0.945)	22.0 (0.866)	260 (10.24)
	15″	24.0 (0.945)	22.0 (0.866)	277 (10.91)

B: REMOVAL

1) Remove union bolt (shown by Ⓐ in Figure 68), and disconnect brake hose from caliper body ASSY.
2) Loosen lock pin (shown by Ⓑ in Figure 68).

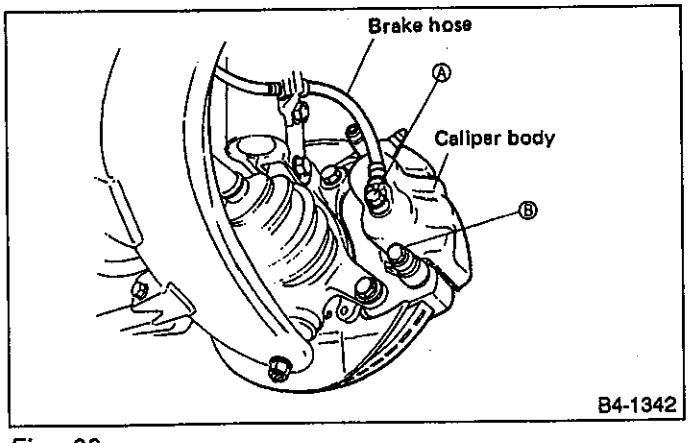

Fig. 68

3) Raise caliper body and move it toward vehicle center to separate it from support.

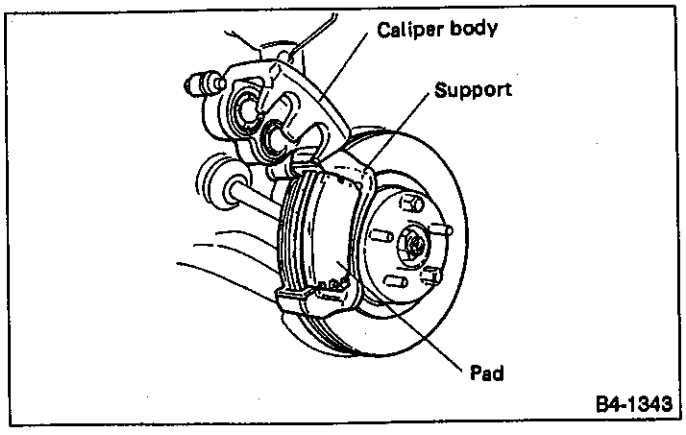

Fig. 69

4) Remove support from housing.

Remove support only when replacing it or the rotor. It need not be removed when servicing caliper body ASSY.

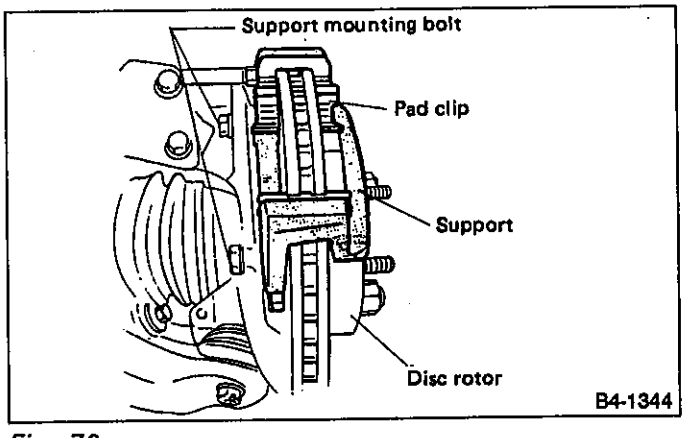

Fig. 70

5) Remove disc rotor from hub.

If disc rotor seizes up within hub, drive disc rotor out by installing an 8-mm bolt in holes B on the rotor.

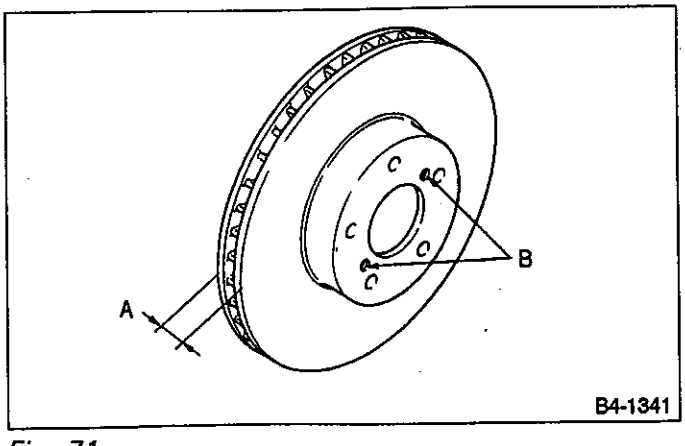

Fig. 71

6) Clean mud and foreign particles from caliper body ASSY and support.

C: DISASSEMBLY

1. 15-INCH TYPE AND 13-INCH TYPE

1) Clean mud and foreign particles from caliper body ASSY and support.

Be careful not to allow foreign particles to enter inlet (at brake hose connector).

2) Using a standard screwdriver, remove boot ring from piston.

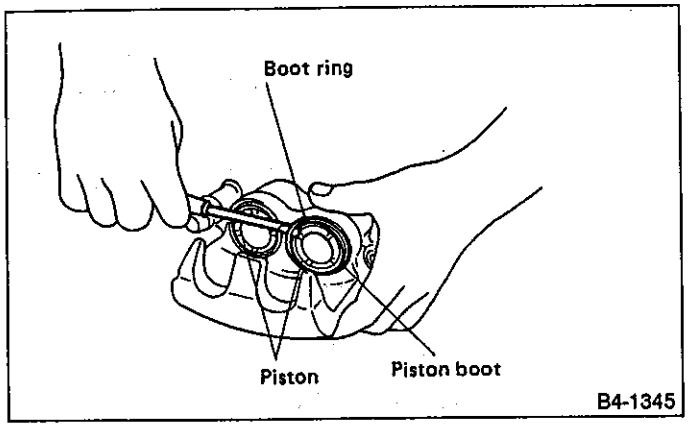

Fig. 72

3) Remove boot from piston end.
4) Gradually supply compressed air via caliper body brake hose to force piston out.

Place a wooden block as shown in Fig. 73 to prevent damage to piston.

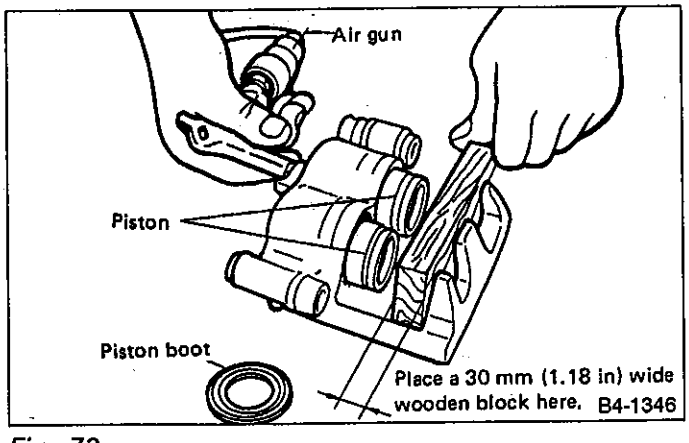

Fig. 73

5) Remove piston seal from caliper body cylinder.
6) Remove lock pin sleeve and boot from caliper body.
7) Remove guide pin boot.

2. 14-INCH TYPE

1) Gradually supply compressed air via inlet of caliper body to force piston out.

a. Place a wooden block as shown in Fig. 74 to prevent damage to piston.
b. Do not apply excessively high pressure.

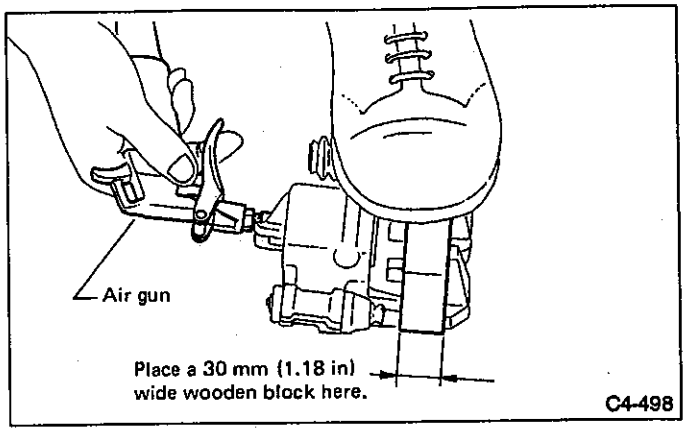

Fig. 74

2) Remove piston boot.
3) Remove piston seal from caliper body cylinder.

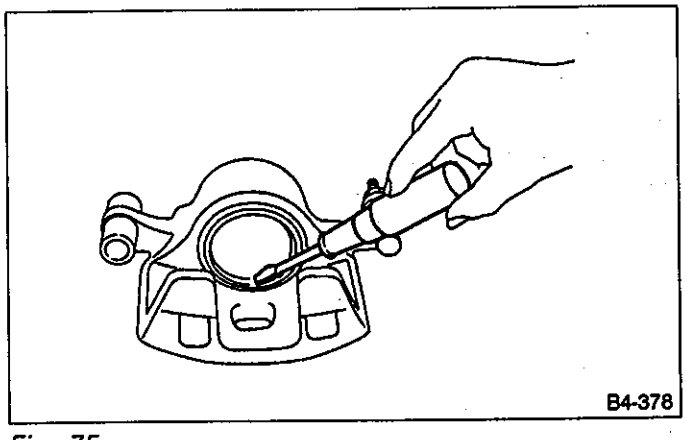

Fig. 75

4) Remove lock pin sleeve and boot from caliper body.
5) Remove guide pin boot.

D: INSPECTION

1) Repair or replace faulty parts.
2) Check caliper body and piston for uneven wear, damage or rust.
3) Check rubber parts for damage or deterioration.

E: ASSEMBLY

1. 15-INCH TYPE AND 13-INCH TYPE

1) Clean caliper body interior using brake fluid.
2) Apply a coat of brake fluid to piston seal and fit piston seal in groove on caliper body.
3) Apply a coat of brake fluid to the entire inner surface of cylinder and outer surface of piston.
4) Insert piston into cylinder.

Do not force piston into cylinder.

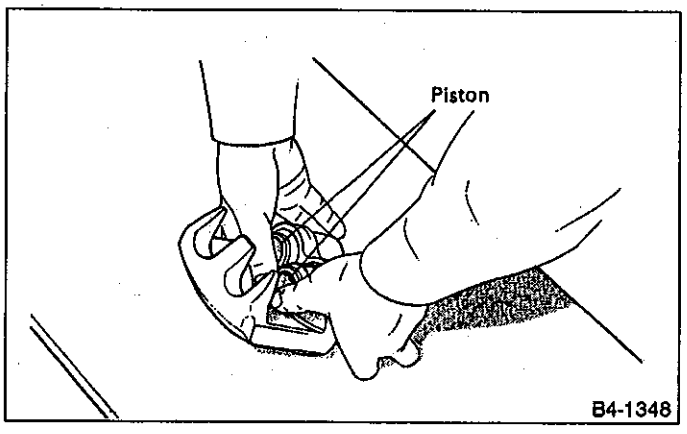

Fig. 76

5) Apply a coat of specified grease to boot and fit in groove on ends of cylinder and piston.

Grease:
NIGLUBE RX-2

To facilitate installation, fit boot starting with piston end.

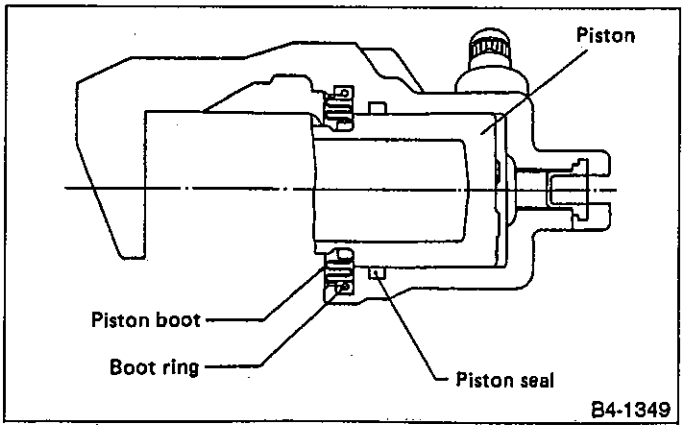

Fig. 77

6) Install boot ring. Be careful not scratch boot.
7) Apply a coat of specified grease to guide pin, outer surface, sleeve outer surface, cylinder inner surface, and boot grooves.

Grease:
RUBBER GREASE or NIGLUBE RX-2

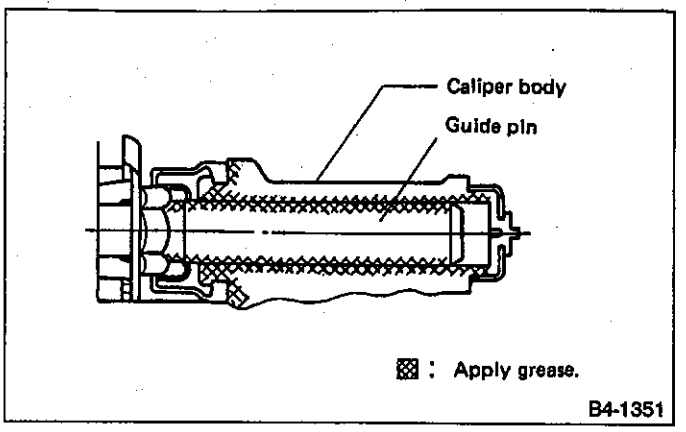

Fig. 78

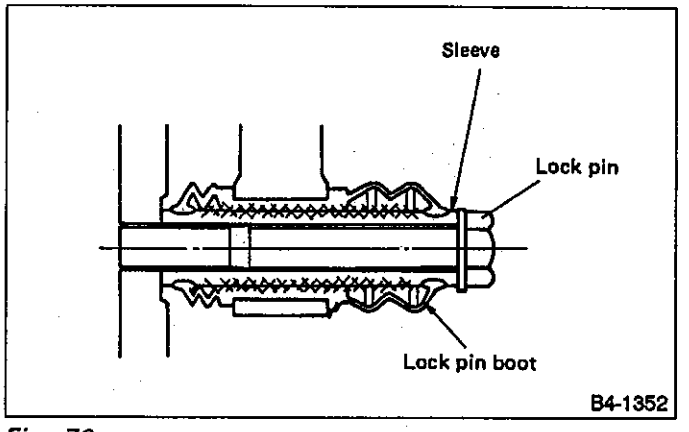

Fig. 79

8) Install guide pin boots on caliper body.
9) Install lock pin boots on caliper body and insert lock pin sleeve into place.

2. 14-INCH TYPE

1) Clean caliper body interior using brake fluid.
2) Apply a coat of brake fluid to piston seal and fit piston seal in groove on caliper body.
3) Apply a coat of brake fluid to the entire inner surface of cylinder and outer surface of piston.
4) Apply a coat of specified grease to boot and fit in groove on ends of cylinder and install piston boot onto cylinder.

Grease:
NIGLUBE RX-2

5) Insert piston into boot and cylinder.
Do not force piston into cylinder.

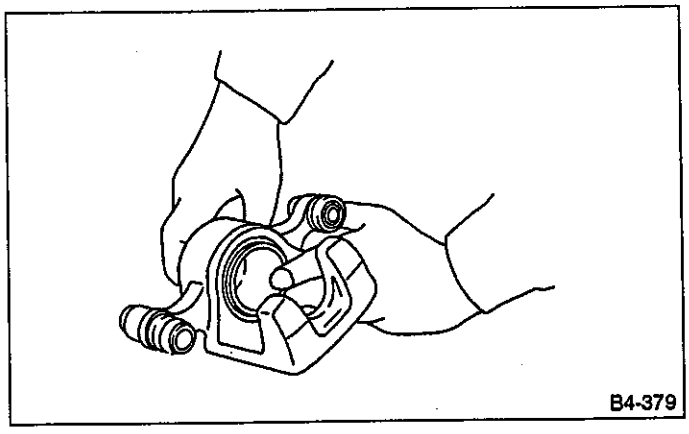

Fig. 80

6) Position boot in grooves on cylinder and piston.

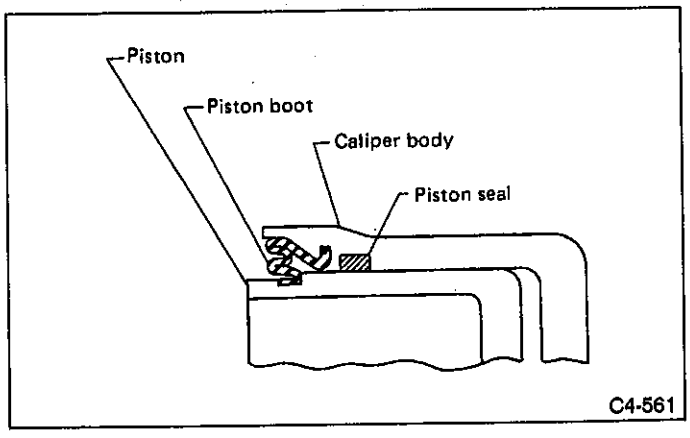

Fig. 81

7) Apply a coat of specified grease to guide pin outer surface, sleeve outer surface, and boot grooves.

Grease:
RUBBER GREASE or NIGLUBE RX-2

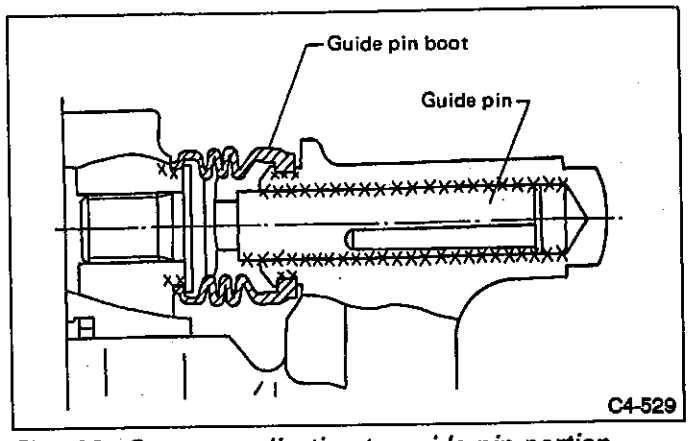

Fig. 82 Grease application to guide pin portion

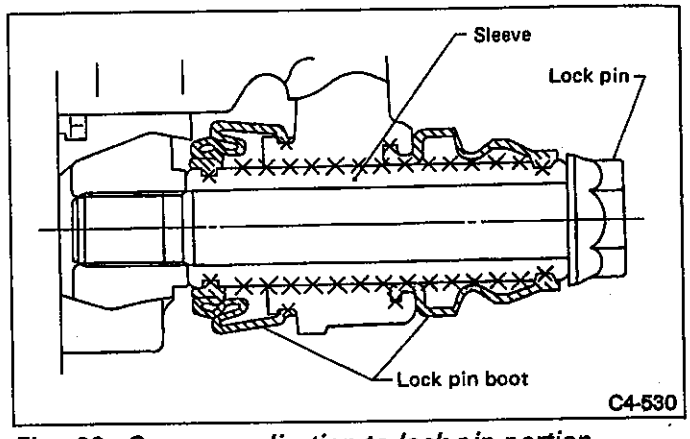

Fig. 83 Grease application to lock pin portion

8) Install guide pin boot on caliper body.
9) Install lock pin boot on caliper body and insert lock pin sleeve into place.

F: INSTALLATION

1) Install disc rotor on housing.
2) Install support on housing.

Tightening torque:
69 — 88 N•m (7 — 9 kg-m, 51 — 65 ft-lb)

a. Always replace the pads for both the left and right wheels at the same time. Also replace pad clips if they are twisted or worn.
b. A wear indicator is provided on the outer disc brake pad. If the pad wears down to such an extent that the end of the wear indicator contacts the disc rotor, a squeaking sound is produced as the wheel rotates. If this sound is heard, replace the pad.
c. When replacing the pad, replace pads of the right and left wheels at the same time.

3) Apply thin coat of PBC GREASE (725191330 or 003607000) to the frictional portion between pad and pad clip.
4) Install pads, rubber coated shim and stainless shim on support.

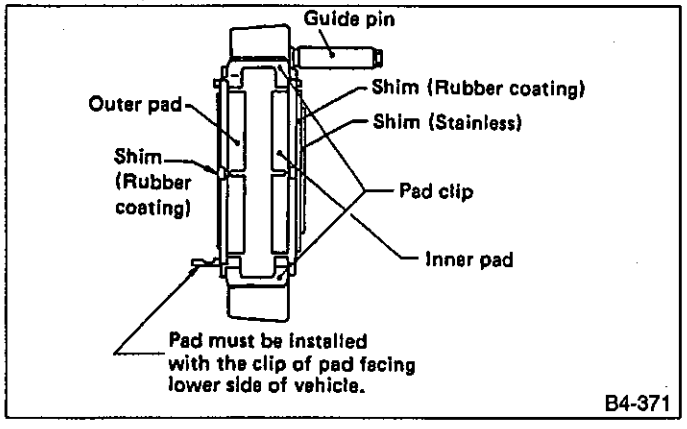

Fig. 84

5) Install caliper body on support.

Tightening torque:
34 — 44 N•m (3.5 — 4.5 kg-m, 25 — 33 ft-lb)

6) Connect brake hose.

Tightening torque:
15 — 21 N•m (1.5 — 2.1 kg-m, 11 — 15 ft-lb)

Replace brake hose gaskets with new ones.

7) Bleed air from brake system.

2. Rear Disc Brake

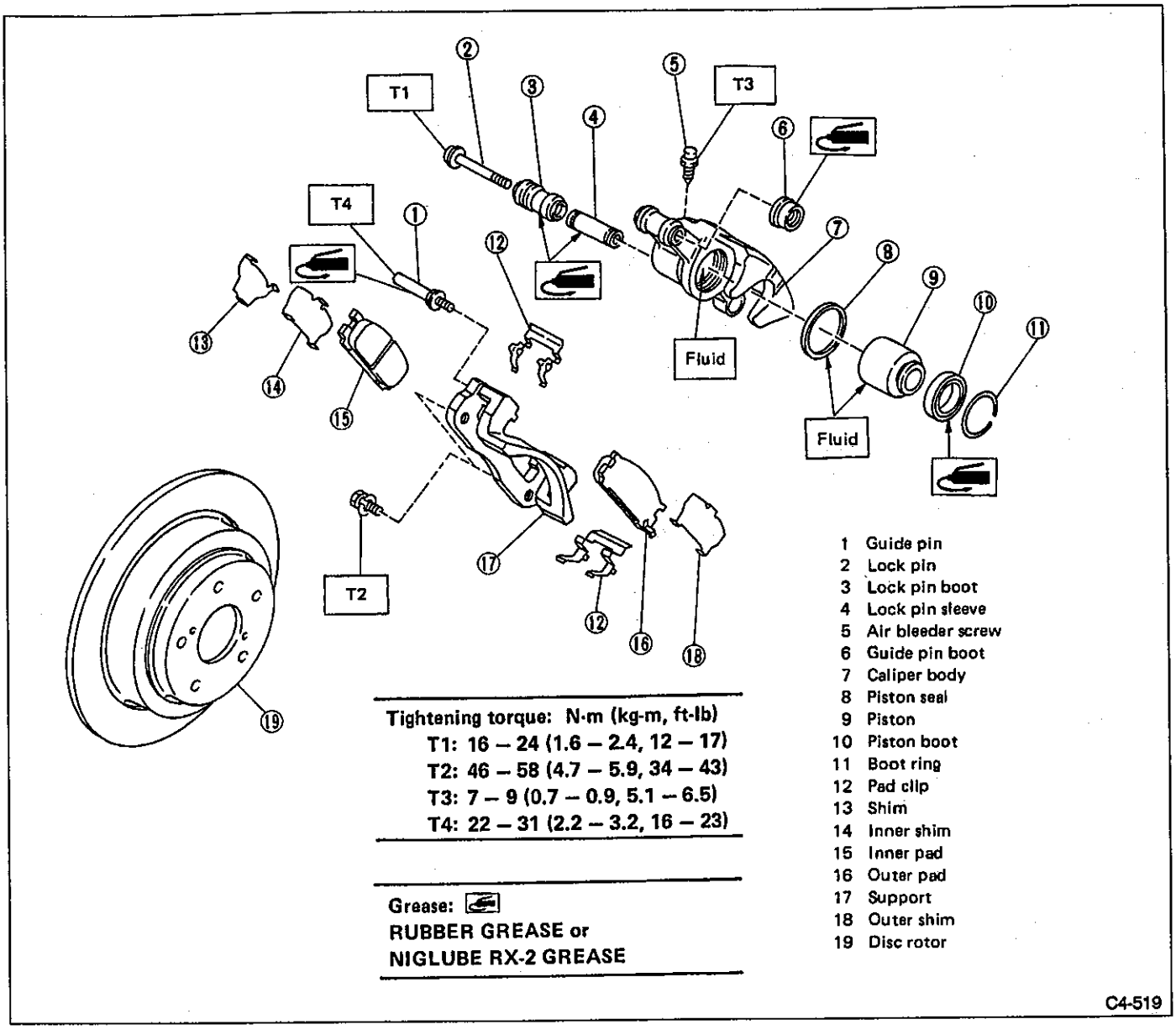

Fig. 85

A: ON-CAR SERVICE

1. PAD

1) Remove lock pin.

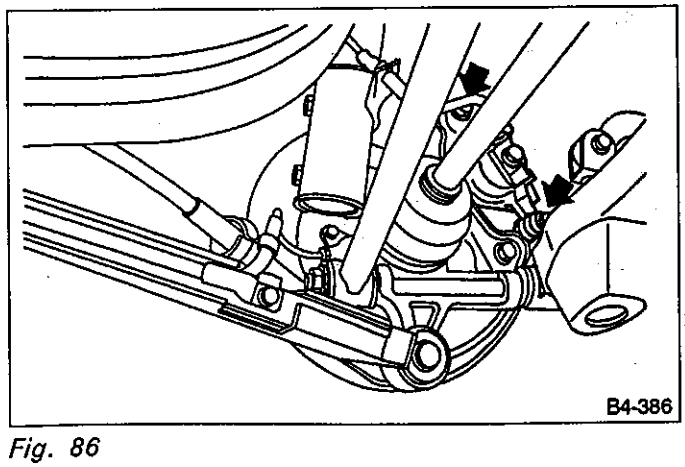

Fig. 86

2) Raise caliper body.
3) Remove pad from support.

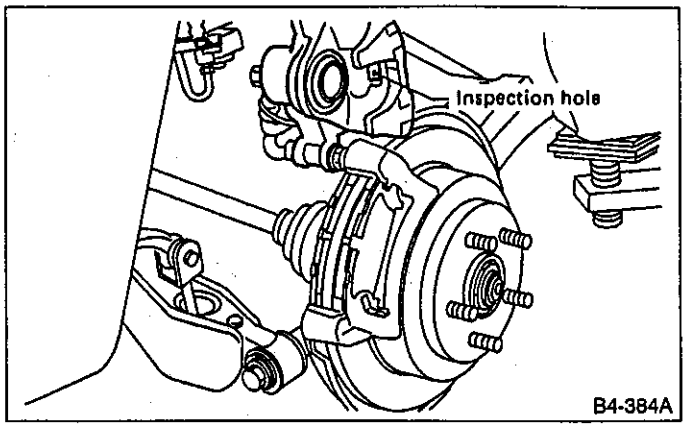

Fig. 87

4) Check pad thickness A.

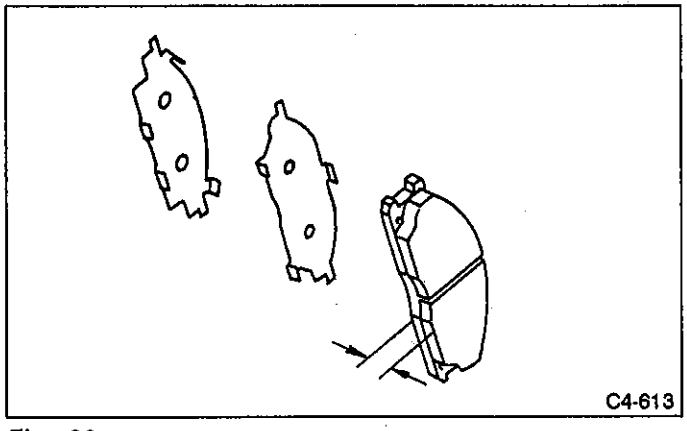

Fig. 88

Pad thickness (including back metal) mm (in)	Standard value	15.0 (0.591)
	Wear limit	6.5 (0.256)

a. Always replace the pads for both the left and right wheels at the same time. Also replace pad clips if they are twisted or worn.
b. A wear indicator is provided on the outer disc brake pad. If the pad wears down to such an extent that the end of the wear indicator contacts the disc rotor, a squeaking sound is produced as the wheel rotates. If this sound is heard, replace the pad.
c. Replace pad if there is oil or grease on it.

5) Apply thin coat of PBC GREASE (725191330 or 03607000) to the frictional portion between pad and pad clip.
6) Install pad on support.

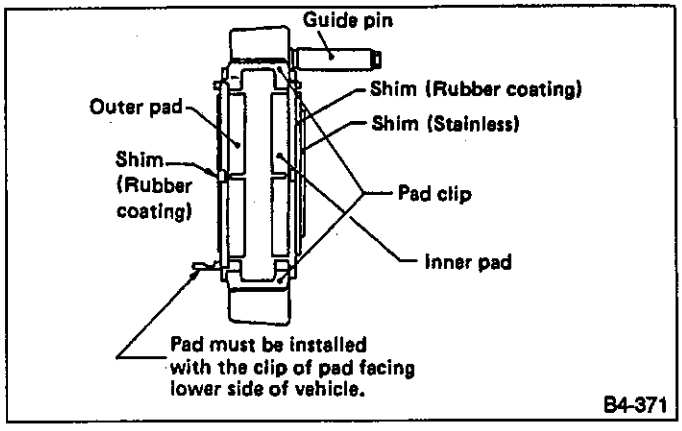

Fig. 89

7) Install caliper body on support.

Tightening torque:
16 — 24 N•m (1.6 — 2.4 kg-m, 12 — 17 ft-lb)

If it is difficult to push piston during pad replacement, loosen air bleeder to facilitate work.

2. DISC ROTOR

1) Set a dial gauge on the disc rotor. Turn disc rotor to check runout.

Make sure that dial gauge is set 5 mm (0.20 in) inward of rotor outer perimeter.

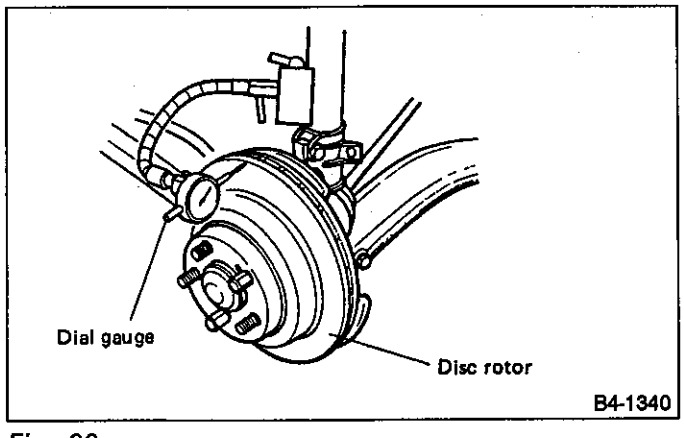

Fig. 90

Disc rotor runout limit:
0.1 mm (0.004 in)

2) Measure disc rotor thickness.

Make sure that micrometer is set 5 mm (0.20 in) inward of rotor outer perimeter.

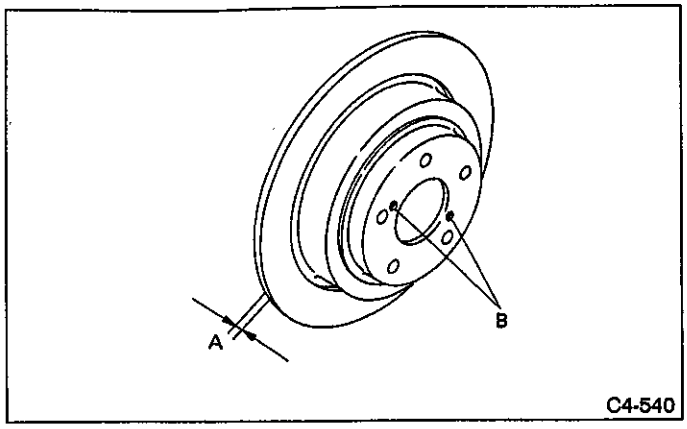

Fig. 91

Disc rotor thickness A mm (in)	Disc type	Standard value	Service limit
	Solid type	10 (0.39)	8.5 (0.335)
	Ventilated type	18 (0.71)	16 (0.63)

When removing disc rotor, refer to instructions under Parking Brake [W3A0].

B: REMOVAL

1) Lift up vehicle and remove wheels.
2) Disconnect brake hose from caliper body ASSY.

Do not allow brake fluid to come in contact with vehicle body; wipe off completely if spilled.

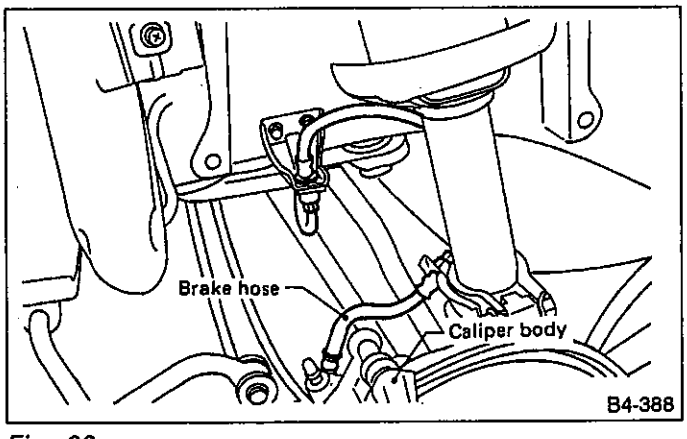

Fig. 92

3) Remove lock pin.
4) Raise caliper body and move it toward vehicle center to separate it from support.
5) Remove support from back plate.

Remove support only when replacing it or the rotor. It need not be removed when servicing caliper body ASSY.

6) Clean mud and foreign particles from caliper body ASSY and support.

Be careful not to allow foreign particles to enter inlet (at brake hose connector).

C: DISASSEMBLY

1) Remove the boot ring.

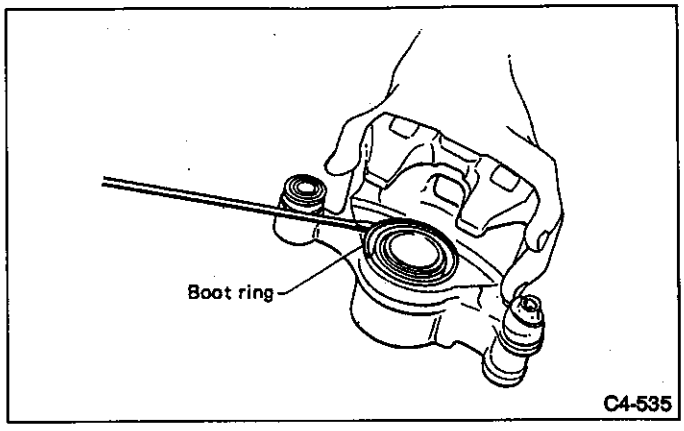

Fig. 93

2) Remove the piston boot.

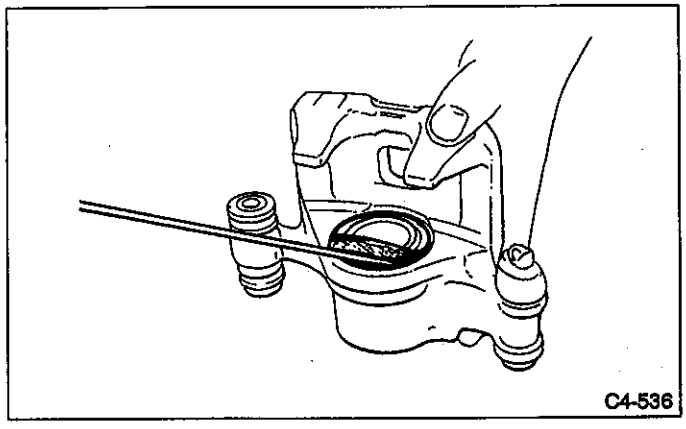

Fig. 94

3) Gradually supply compressed air via inlet of caliper body to force piston out.

a. Place a wooden block as shown in Fig. 95 to prevent damage to piston.
b. Do not apply excessively high pressure.

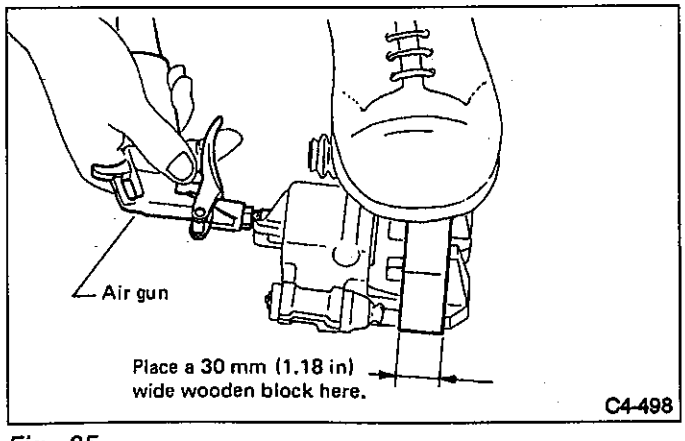

Fig. 95

4) Remove piston seal from caliper body cylinder.

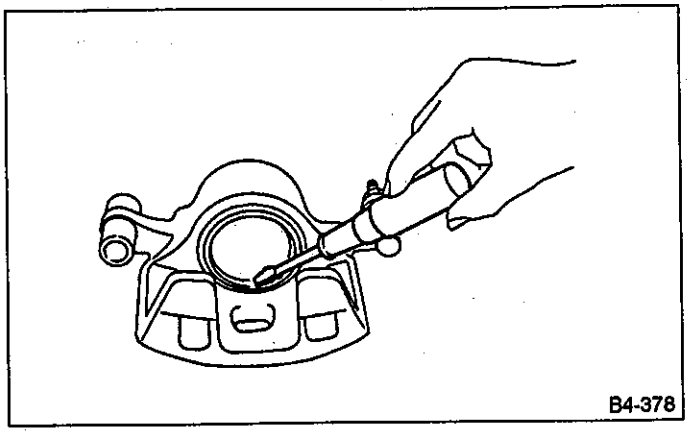

Fig. 96

5) Remove lock pin sleeve and boot from caliper body.
6) Remove guide pin boot.

D: INSPECTION

1) Repair or replace faulty parts.
2) Check caliper body and piston for uneven wear, damage or rust.
3) Check rubber parts for damage or deterioration.

E: ASSEMBLY

1) Clean caliper body interior using brake fluid.
2) Apply a coat of brake fluid to piston seal and fit piston seal in groove on caliper body.
3) Apply a coat of brake fluid to the entire inner surface of cylinder and outer surface of piston.
4) Insert piston into cylinder.

Do not force piston into cylinder.

5) Apply a coat of specified grease to boot and fit in groove on ends of cylinder and piston.

Grease:
NIGLUBE RX-2

6) Install the piston boot to the caliper body, and attach boot ring.

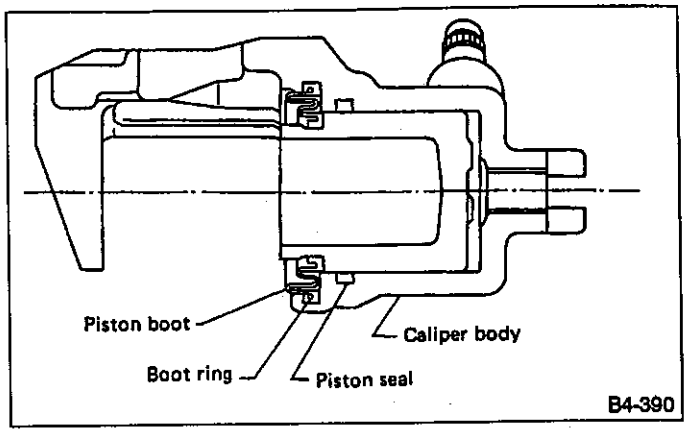

Fig. 97

7) Apply a coat of specified grease to guide pin, outer surface, sleeve outer surface, cylinder inner surface, and boot grooves.

Grease:
RUBBER GREASE or NIGLUBE RX-2

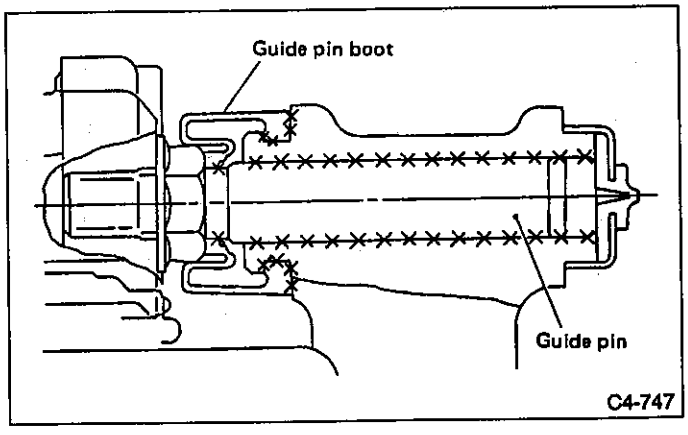

Fig. 98

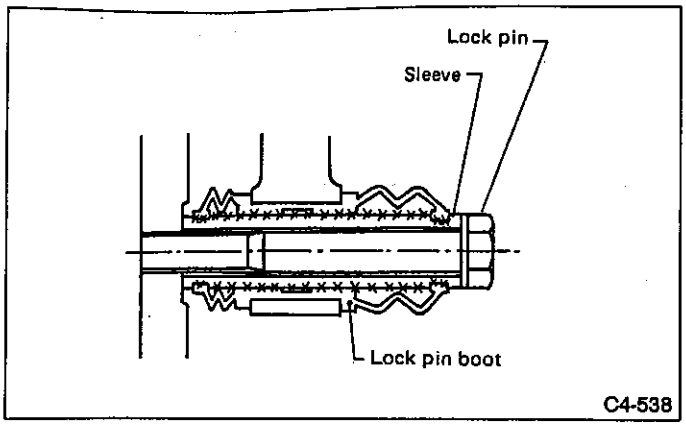

Fig. 99

8) Install guide pin boots on caliper body.
9) Install lock pin boots on caliper body and insert lock pin sleeve into place.

F: INSTALLATION

1) Install disc rotor on hub.
2) Install support on back plate.

Tightening torque:
46 — 58 N•m (4.7 — 5.9 kg-m, 34 — 43 ft-lb)

a. Always replace the pads for both the left and right wheels at the same time. Also replace pad clips if they are twisted or worn.
b. A wear indicator is provided on the outer disc brake pad. If the pad wears down to such an extent that the end of the wear indicator contacts the disc rotor, a squeaking sound is produced as the wheel rotates. If this sound is heard, replace the pad.
c. Replace pads if there is oil or grease on them.

3) Apply thin coat of PBC GREASE (725191330 or 003607000) to the frictional portion between pad and pad clip.
4) Install pads on support.

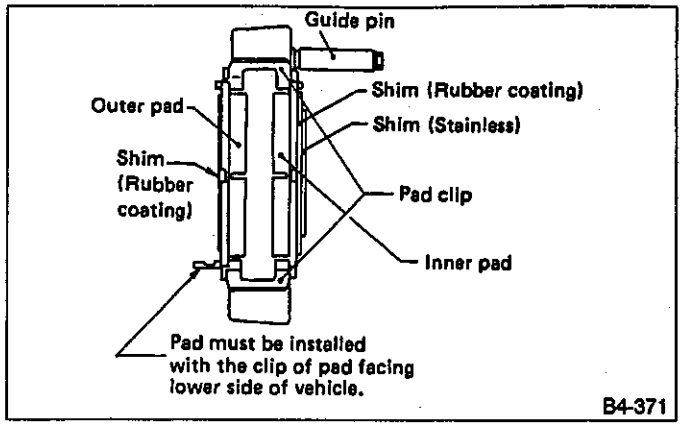

Fig. 100

5) Install caliper body on support.

Tightening torque:
16 — 24 N•m (1.6 — 2.4 kg-m, 12 — 17 ft-lb)

6) Connect brake hose.

Tightening torque:
16 — 20 N•m (1.6 — 2.0 kg-m, 12 — 14 ft-lb)

a. The brake hose must be connected without any twist.
b. Replace brake hose gaskets with new ones.

7) Bleed air from brake system.

3. Rear Drum Brake

A: REMOVAL

1. BRAKE DRUM AND SHOE

1) Loosen wheel nuts, jack up vehicle, support it with rigid racks, and remove wheel.
2) Remove brake drum from brake ASSY.

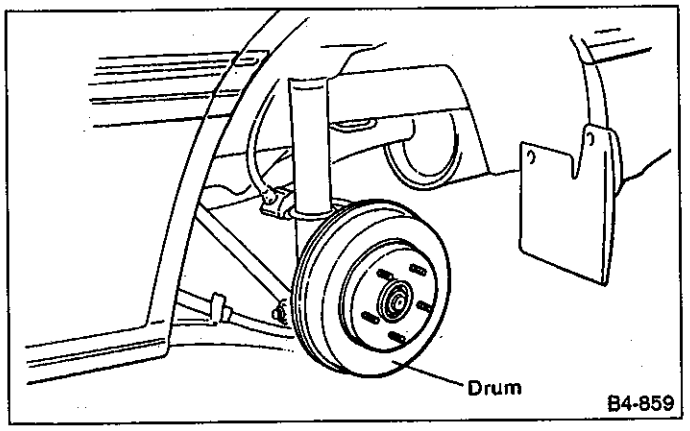

Fig. 101

If it is difficult to remove brake drum, remove adjusting hole cover from back plate, and then, turn adjusting screw using a slot-type screwdriver until brake shoe separates from the drum.

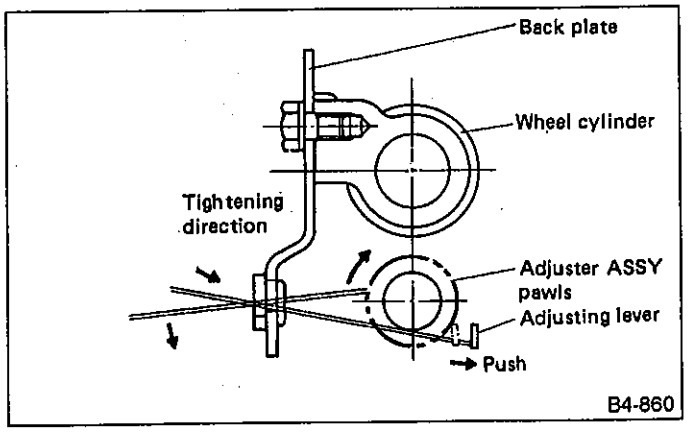

Fig. 102

3) Hold hoild down pin by securing rear of back plate with your hand.
4) Disconnect hold-down cup from hold-down pin by rotating hold-down cup.

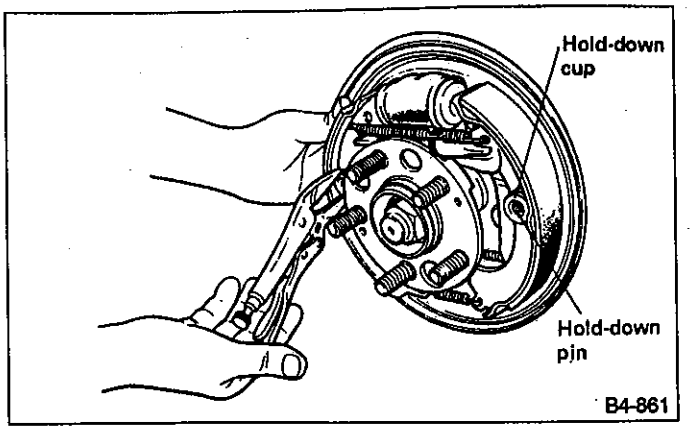

Fig. 103

5) Disconnect lower shoe return spring from shoes.

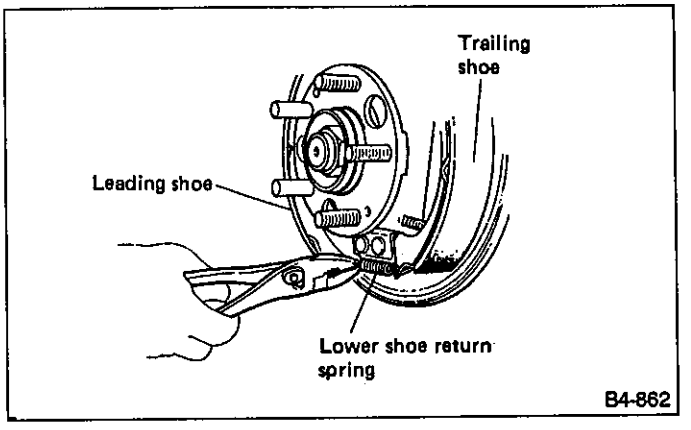

Fig. 104

6) Remove shoes one by one from back plate with adjuster ASSY.

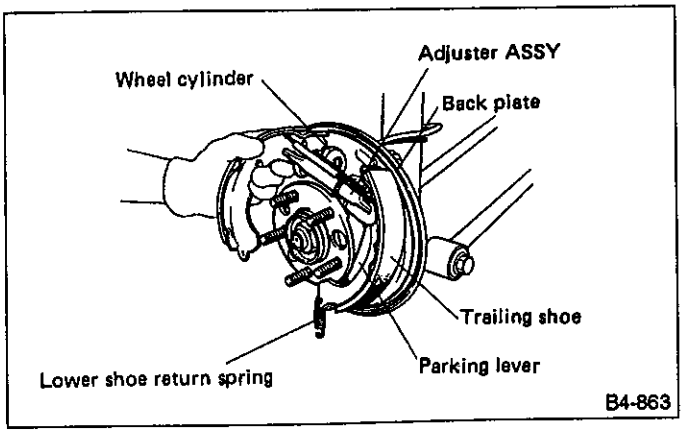

Fig. 105

Be careful not to bend parking brake cable excessively when removing brake shoes.

7) Disconnect parking brake cable from parking lever.
8) Remove the following.

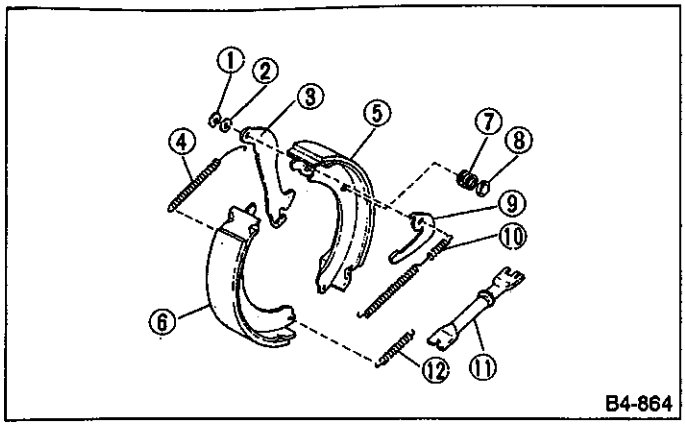

Fig. 106

1 Retainer
2 Washer
3 Parking lever
4 Upper shoe return spring
5 Trailing shoe
6 Leading shoe
7 Shoe hold-down spring
8 Shoe hold-down cup
9 Adjusting lever
10 Adjuster spring
11 Adjuster ASSY
12 Lower shoe return spring

2. BRAKE ASSY

1) Remove wheel.
2) Remove brake drum
3) Unscrew the brake pipe flare nut and disconnect brake pipe.

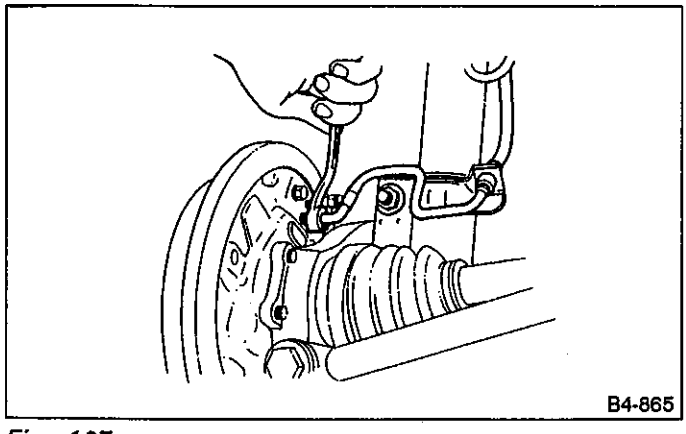

Fig. 107

4) Remove hub.

Refer to C. 4-2 [W2A0].

5) Remove the bolts installing back plate, and then, remove brake ASSY.

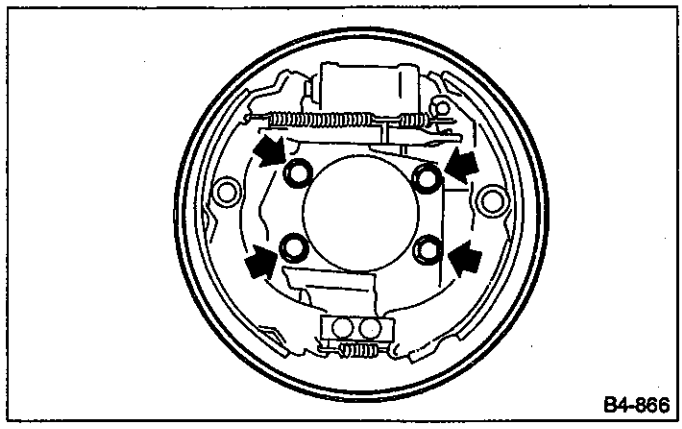

Fig. 108

3. WHEEL CYLINDER

1) Remove brake drum and shoes.
2) Unscrew brake pipe flare nut; and disconnect brake pipe.
3) Remove the bolts installing wheel cylinder on back plate, and remove it.

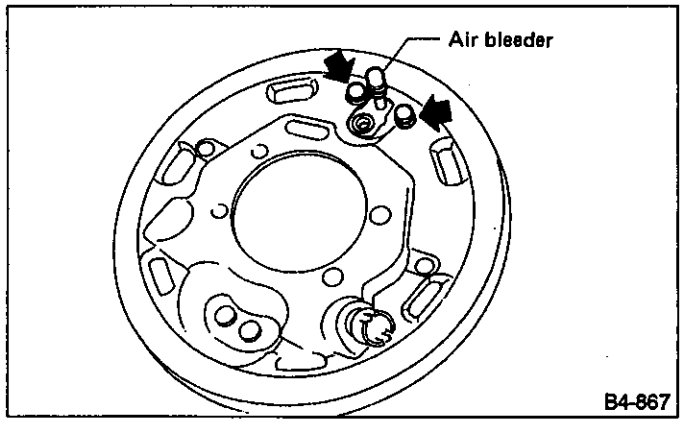

Fig. 109

B: DISASSEMBLE

1. WHEEL CYLINDER

1) Remove right and left dust boots from wheel cylinder.
2) Remove piston, cup, spring and air bleeder screw and cap.

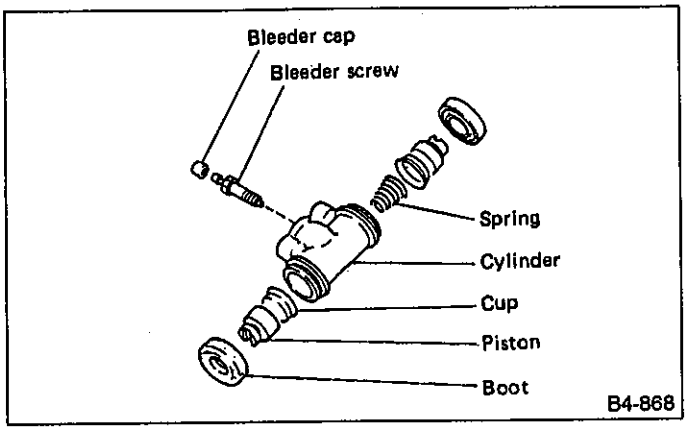

Fig. 110

C: INSPECTION

1) If the inside surface of brake drum is streaked, correct the surface. And, if it is unevenly worn, taperingly streaked, or the outside surface of brake drum is damaged, correct or replace it.
2) Measure the drum inner diameter.

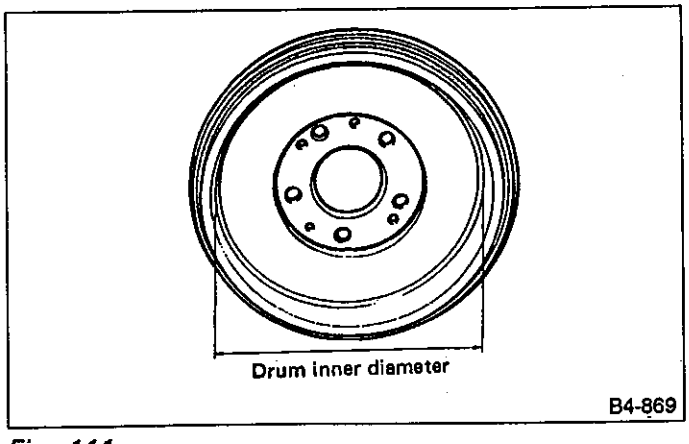

Fig. 111

Drum inner diameter: mm (in)
Standard: 228.6 (9)
Service limit: 230.6 (9.08)

3) Measure the lining thickness.

Lining thickness: mm (in)
Standard: 4.1 (0.161)
Service limit: 1.5 (0.059)

4) If the deformation or wear of back plate, shoe, etc. are notable, replace them.
5) When the shoe return spring tension is excessively weakened, replace it, taking care to identify upper and lower springs.

D: ASSEMBLY

1. WHEEL CYLINDER

Clean all parts in brake fluid. Check and replace faulty parts.

- Cup and boot for damage or fatigue
- Cylinder, piston and spring or damage or rust formation

1) Assembly is the reverse order of disassembly.

a. When installing the cup, use the special tool ADAPTER, apply brake fluid to the frictional surface for smooth installation and pay attention to cup direction.
b. When replacing the repair kit, make sure that the sizes of cylinder and cup are the same as those which were replaced.
c. Special tools (ADAPTERs) are available in different sizes.
Use only the tool of the correct size.

ADAPTER	
Part No.	Applicable size
925460000	17.46 mm (11/16 in)
926460000	19.05 mm (3/4 in)

b. While assembling, be careful to prevent any metal chip, dust or dirt from entering the wheel cylinder.

2) Apply rubber grease to the boot inside as shown in figure.

NIGLUBE RX-2 GREASE (P/N 003606000)

Never use brake grease.

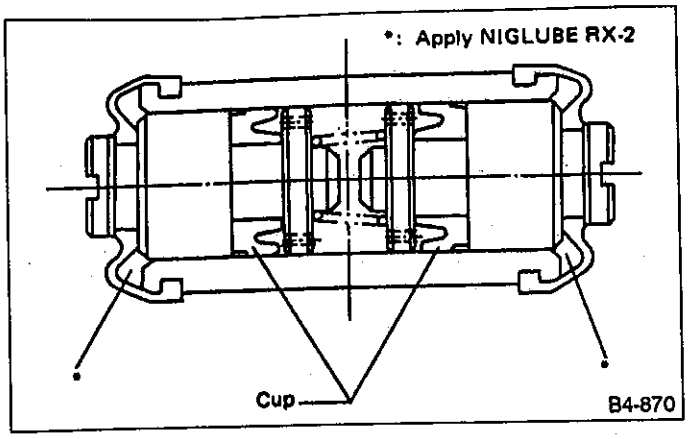

Fig. 112

E: INSTALLATION

1. WHEEL CYLINDER

Install wheel cylinder on back plate, and tighten bolts.

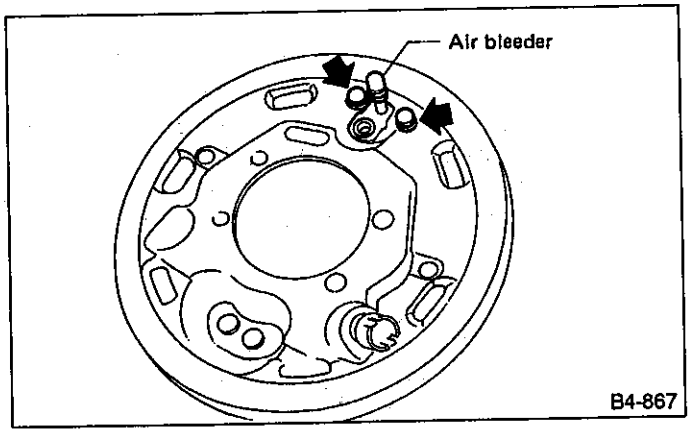

Fig. 113

Tightening torque: N•m (kg-m, ft-lb)
8 — 12 (0.8 — 1.2, 5.8 — 8.7)

2. BRAKE DRUM AND SHOE

1) Clean back plate and wheel cylinder.
2) Apply grease to portions indicated by arrows in figure.

Brake grease:
Dow Corning Molykote No. 7439 (P/N 725191460)

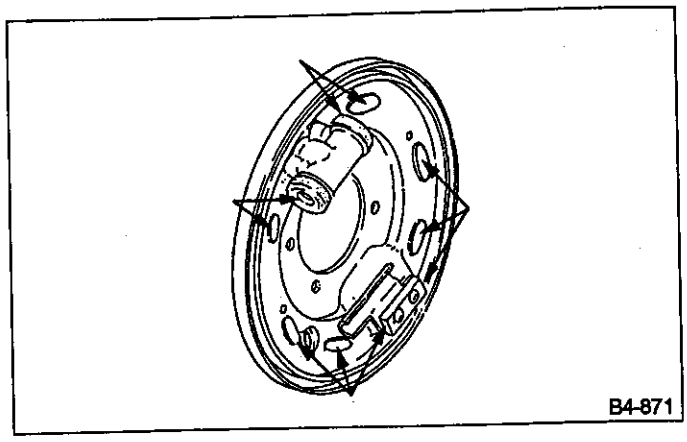

Fig. 114

3) Apply grease to adjusting screw and both ends of adjuster ASSY.

Brake grease:
Dow Corning Molykote No. 7439 (P/N 725191460)

4) Connect upper shoe return spring to shoes.

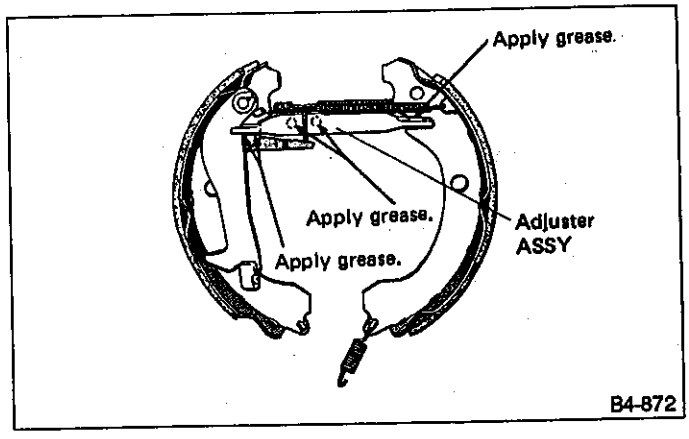

Fig. 115

5) While positioning shoes (one at a time) in groove on wheel cylinder, secure shoes.

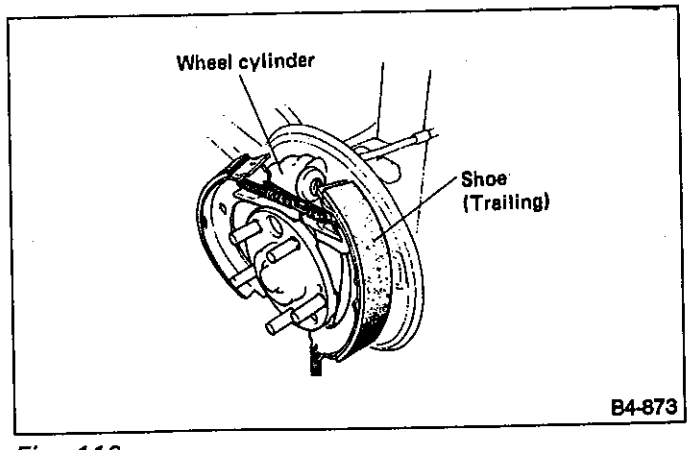

Fig. 116

6) Connect lower shoe return spring.
7) Fix shoes by connecting hold-down cup to hold-down pin.

3. BRAKE ASSY

1) Install brake ASSY on strut, and tighten bolts to install back plate.

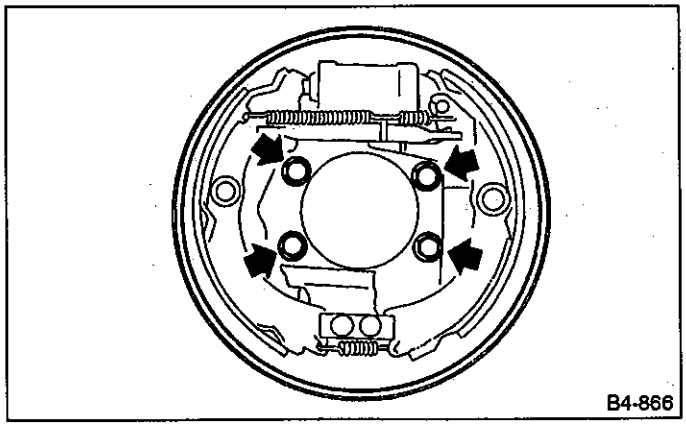

Fig. 117

Tightening torque: N•m (kg-m, ft-lb)
46 — 58 (4.7 — 5.9, 34 — 43)

2) Connect brake pipe, and tighten brake pipe flange nut.

Tightening torque: N•m (kg-m, ft-lb)
13 — 18 (1.3 — 1.8, 9.4 — 13.0)

3) Install hub.

Refer to C. 4-2.

4) Set the outside diameter of brake shoes less than 0.5 — 0.8 mm (0.020 — 0.031 in) in comparison with the inside diameter of brake drum.

5) Install brake drum.

After installing brake ASSY, bleed air from brake line.

4. Parking Brake (Rear Disc Brake)

A: REMOVAL

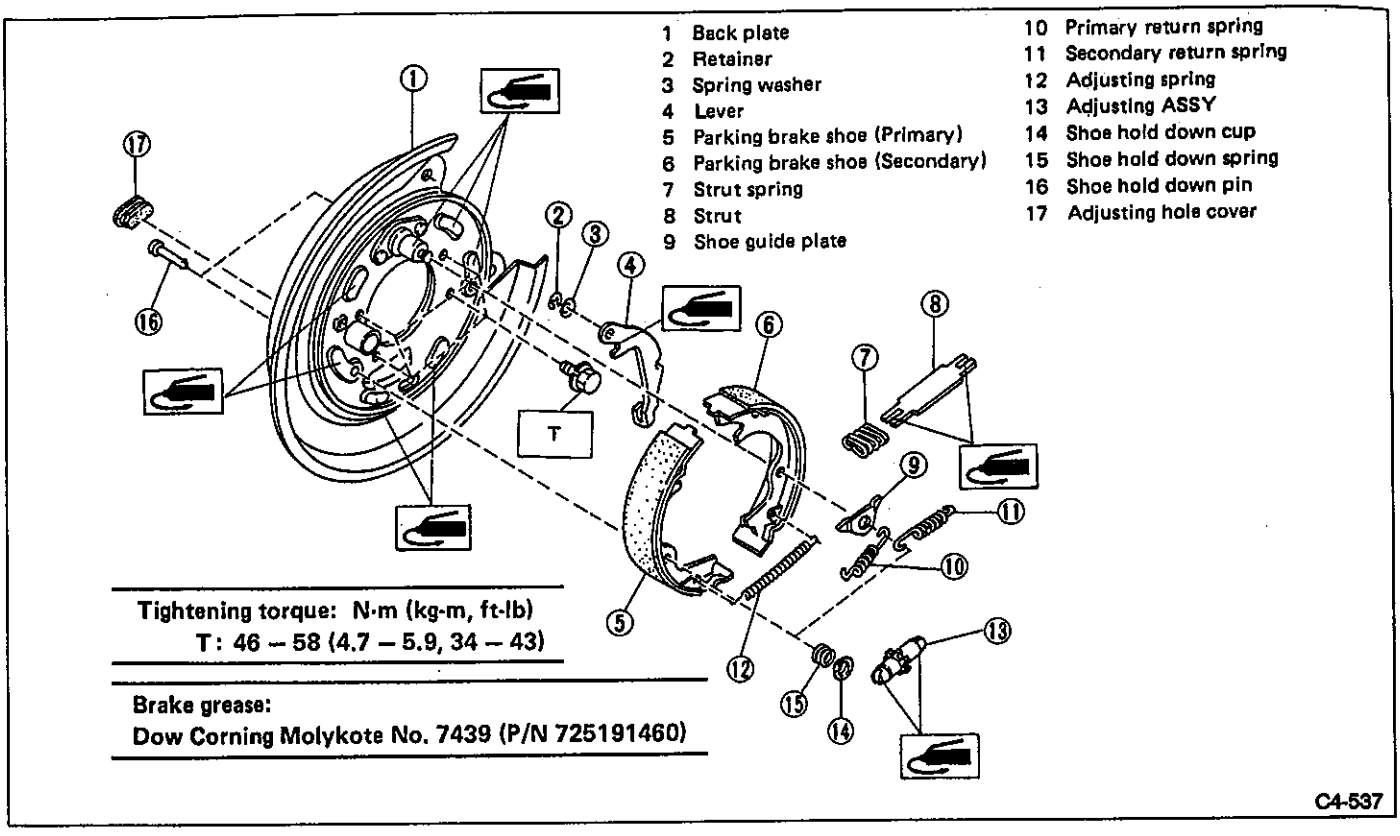

Fig. 118

1) Remove the two mounting bolts and remove the disc brake ASSY.

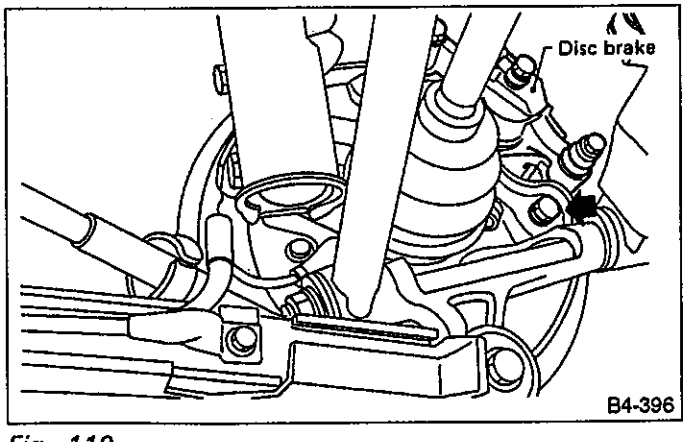

Fig. 119

2) Suspend the disc brake ASSY so that the hose is not stretched.
3) Remove the disc rotor.
4) Remove shoe return spring from parking brake ASSY.
5) Remove front shoe hold down spring and pin with pliers.
6) Remove strut and strut spring.
7) Remove adjuster ASSY from parking brake ASSY.
8) Remove brake shoe.
9) Remove rear shoe hold-down spring and pin with pliers.
10) Remove parking cable from parking lever.

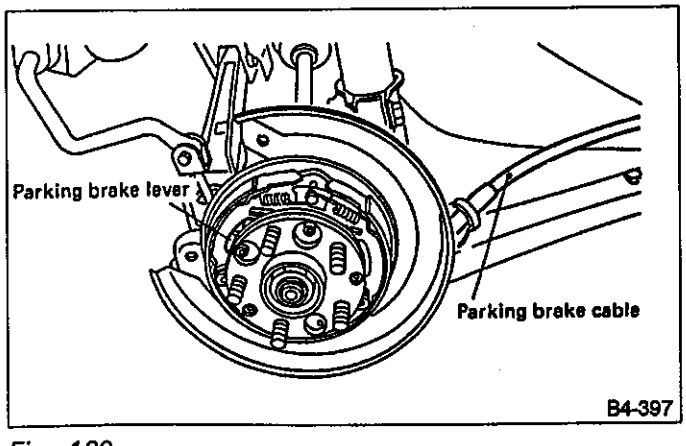

Fig. 120

11) Using a standard screwdriver, raise retainer. Remove parking lever and washer from brake shoe.

B: INSPECTION

1) Measure brake disc inside diameter. If the disc is scored or worn, replace the brake disc.

Disc inside diameter:
Standard
170 mm (6.69 in)
Service limit
171 mm (6.73 in)

2) Measure the lining thickness. If it exceeds the limit, replace shoe ASSY.

Lining thickness:
Standard
3.2 mm (0.126 in)
Service limit
1.5 mm (0.059 in)

Replace the brake shoes on the right and left brake ASSY at the same time.

C: INSTALLATION

Be sure lining surface is free from oil contamination.

Brake grease:
Dow Corning Molykote No 7439 (P/N 725191460)

1) Apply brake grease to the following places. (Refer to Figure 118.)
(1) Six contact surfaces of shoe rim and back plate packing.
(2) Contact surface of shoe wave and anchor pin
(3) Contact surface of lever and strut
(4) Contact surface of shoe wave and adjuster assembly
(5) Contact surface of shoe wave and strut
(6) Contact surface of lever and shoe wave

2) Installation is in reverse order of removal.

a. Use new retainers and clinch them when installing brake shoes to levers.
b. Ensure that parking lever moves smoothly.
c. Do not confuse left parking lever with right one.
d. Do not confuse left strut with right one.
e. Ensure that adjuster assembly is securely installed with screw in the left side, facing vehicle front.

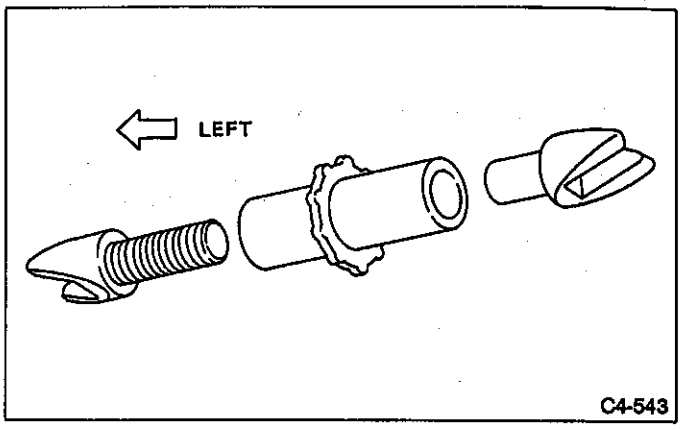

Fig. 121

f. Ensure that shoe return spring is installed as shown in Fig. 122.

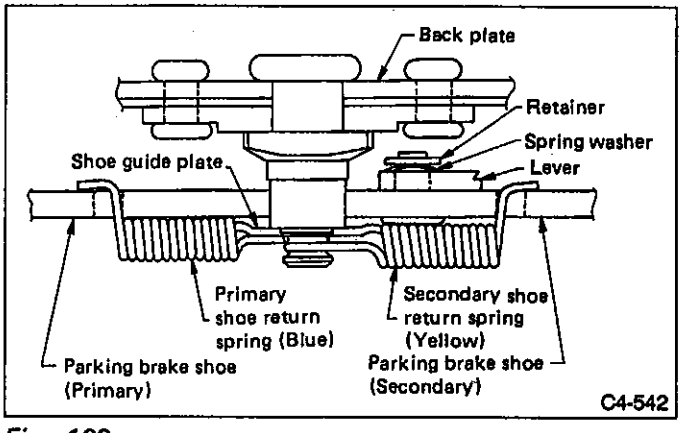

Fig. 122

3) Adjust parking brakes. Refer to 4-4 [W3D1].

a. After replacing parking brake lining, be sure to drive vehicle for "break-in" purposes.
b. Drive the vehicle about 35 km/h (22 MPH).
c. With the parking brake release button pushed in, pull the parking brake lever gently.
d. Drive the vehicle for about 200 meter (0.12 mile) in this condition.
e. Wait 5 to 10 minutes for the parking brake to cool down. Repeat this procedure once more.
f. After breaking-in, re-adjust parking brakes.

D: PARKING BRAKE ADJUSTMENT

1. SHOE CLEARANCE ADJUSTMENT

1) Remove adjusting hole cover from back plate.
2) Turn adjusting screw using a slot-type screw driver until brake shoe is in close contact with disc rotor.
3) Turn back (downward) adjusting screw 3 or 4 notches.

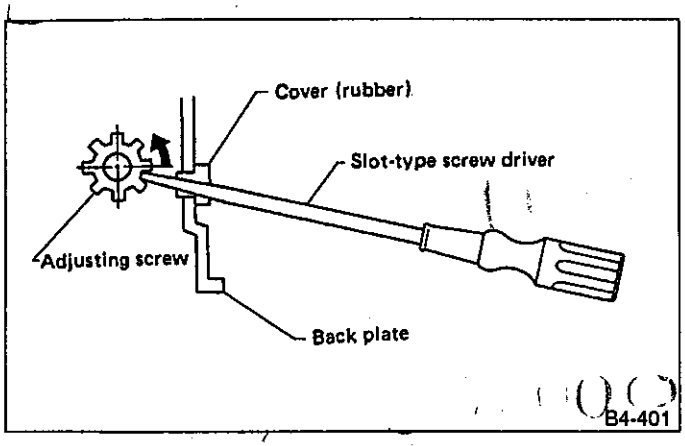

Fig. 123

4) Install adjusting hole cover to back plate.

2. LEVER STROKE ADJUSTMENT

1) Remove console box lid.
2) Forcibly pull parking brake lever 3 to 5 times.
3) Adjust parking brake lever by turning adjuster until parking brake lever stroke is set at 6 notches with operating force of 196 N (20 kg, 44 lb).
4) Tighten lock nut.

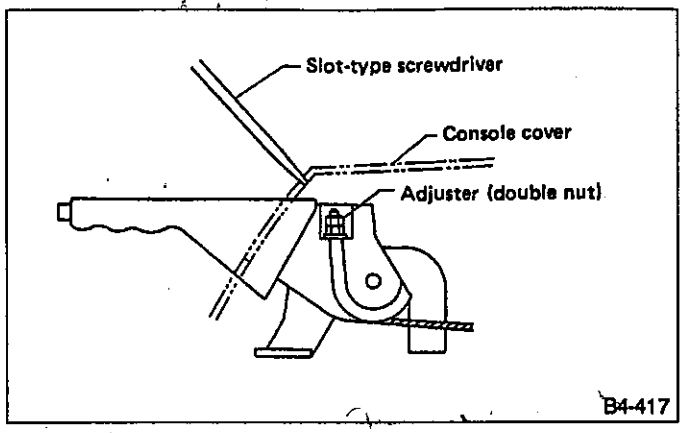

Fig. 124

5) Install console box lid.

Lever stroke:
7 to 8 notches when pulled with a force of 196 N (20 kg, 44 lb)

Torque (Adjuster lock nut):
4.4 — 7.4 N•m (0.45 — 0.75 kg-m, 3.3 — 5.4 ft-lb)

5. Master Cylinder

A: REMOVAL

1) Thoroughly drain brake fluid from reservoir tank.
2) Disconnect fluid level indicator harness connector.
3) Remove brake pipes from master cylinder.
4) Remove master cylinder mounting nuts, and take out master cylinder from brake booster.

Be extremely careful not to spill brake fluid. Brake fluid spilt on the vehicle body will harm the painted surface; wipe it off quickly if spilt.

B: DISASSEMBLY

1. PRECAUTIONS FOR DISASSEMBLY

1) Remove mud and dirt from the surface of brake master cylinder.
2) Prepare tools necessary for disassembly operation, and arrange them neatly on work bench.
3) Clean work bench.
4) Tools for disassembly operation:
- Phillips screwdriver 1
- C-ring pliers 1

2. DISASSEMBLY PROCEDURE

1) Remove secondary piston stopper. (only vehicle equipped with ABS)
2) Remove C-ring with C-ring pliers pushing in primary piston slightly.

Piston may jump out from master cylinder.

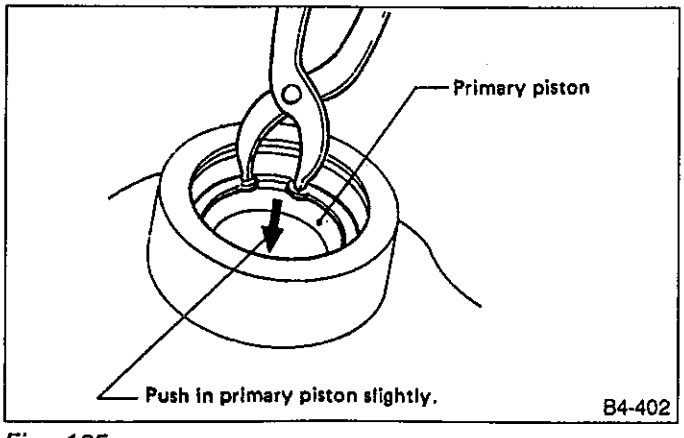

Fig. 125

3) Extract primary piston CP and secondary piston CP.

a. Do not disassemble the piston CP; otherwise, the spring set value may be changed.
b. Use brake fluid or methanol to wash inside wall of cylinder, pistons and piston cups. Be careful not to damage parts when washing. If methanol is used for washing, do not dip rubber parts, such as piston cups, in it for more than 30 seconds; otherwise, they may become swelled.

C: INSPECTION

If any damage, deformation, wear, swelling, rust, and other faults are found on the primary piston CP, secondary piston CP, secondary piston stopper, or gasket, replace the faulty part.

a. The primary and secondary pistons must be replaced as complete assemblies.
b. The service limit of the clearance between each piston and the master cylinder inner dia. is 0.11 mm (0.0043 in).
c. When handling parts, be extremely careful not to damage or scratch the parts, or let any foreign matter get on them.

D: ASSEMBLY

1. PRECAUTIONS FOR ASSEMBLING

1) When assembling, be sure to use recommended brake fluid.
2) Ensure that the inside wall of cylinder, pistons, and piston cups are free from dirt when assembling.
3) Be extremely careful not to damage, scratch, or dent cylinder inside wall, pistons, and piston cups.
4) Do not drop parts. Never attempt to use any part that has been dropped accidentally.

2. ASSEMBLING OPERATION

1) Assembling piston CP:
Apply recommended brake fluid to inside wall of cylinder, and to outer surface of piston CP, and install piston CPs carefully into cylinder.
2) Assembling secondary piston stopper:
After installing piston into cylinder, push primary piston in about 10 mm (0.39 in), using a rod, such as push rod then assemble gasket and secondary piston stopper.

Tightening torque:
1.5 — 2.9 N•m (0.15 — 0.3 kg-m, 1.1 — 2.2 ft-lb)

If the gasket and secondary piston stopper are assembled without pushing in the primary piston, scratches may be caused on the secondary piston, and no pressure may be built up in the secondary side. To avoid such an error, be sure to push in the primary piston before assembling these parts.

3) Assembling C-ring:
With primary piston pushed in slightly, attach C-ring by using C-ring pliers.

After assembling, ensure that the C-ring is fitted securely in the ring groove.

E: INSTALLATION

To install the master cylinder to the body, reverse the sequence of removal procedure.

Tightening torque:
Master cylinder mounting nut
10 — 18 N•m (1.0 — 1.8 kg-m, 7 — 13 ft-lb)
Piping flare nut
13 — 18 N•m (1.3 — 1.8 kg-m, 9 — 13 ft-lb)

Be sure to use recommended brake fluid.

6. Brake Booster

A: REMOVAL

1) Remove the following parts at engine compartment.
   (1) Disconnect connector for brake fluid level indicator.
   (2) Remove brake pipes from master cylinder.
   (3) Remove master cylinder installing nuts.
   (4) Disconnect vacuum hose from brake booster.
2) Remove the following parts from the pedal bracket.
   (1) Snap pin and clevis pin.
   (2) Four brake booster installing nuts.
3) Remove brake booster while shunning brake pipes.

B: INSTALLATION

1) Mount brake booster in position.
2) Connect operating rod to brake pedal with clevis pin and snap pin.

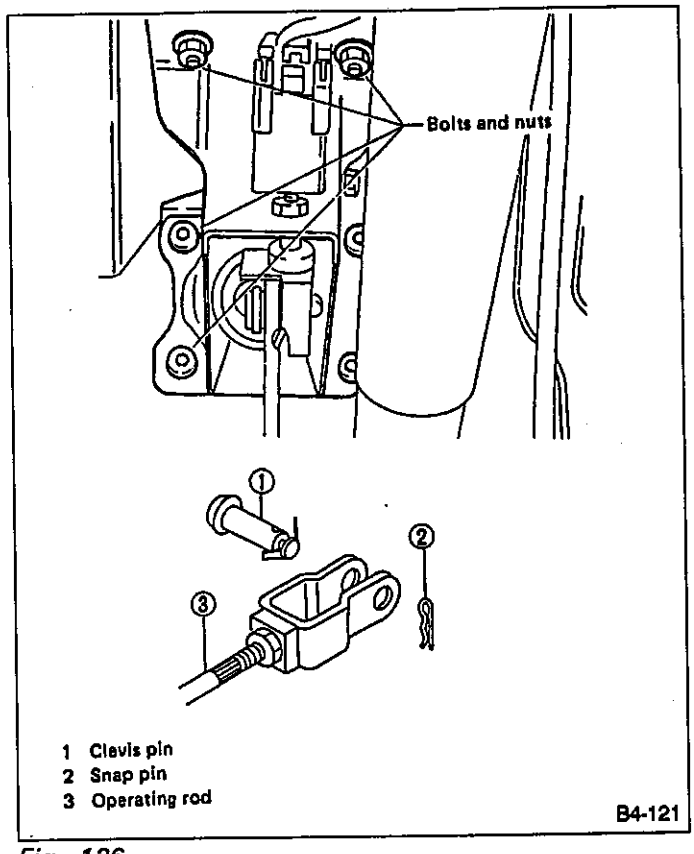

Fig. 126

3) Connect vacuum hose to brake booster.
4) Mount master cylinder onto brake booster.
5) Connect brake pipes to master cylinder.

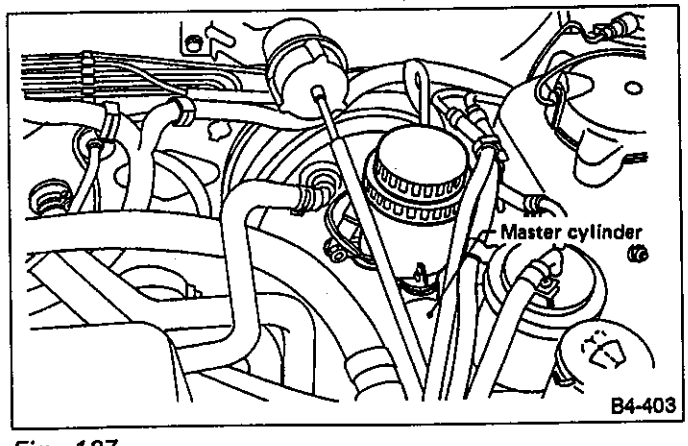

Fig. 127

6) Connect electric connector for brake fluid level indicator.
7) Adjust operating rod of brake booster as follows:
(1) Be sure engine is off. (No vacuum is applied to brake booster.)
(2) There should be play between brake booster clevis and pin at brake pedal installing portion.
(Depress brake pedal pad with a force of less than 10 N [1 kg, 2 lb] to a stroke of 1 to 3 mm [0.04 to 0.12 in].)

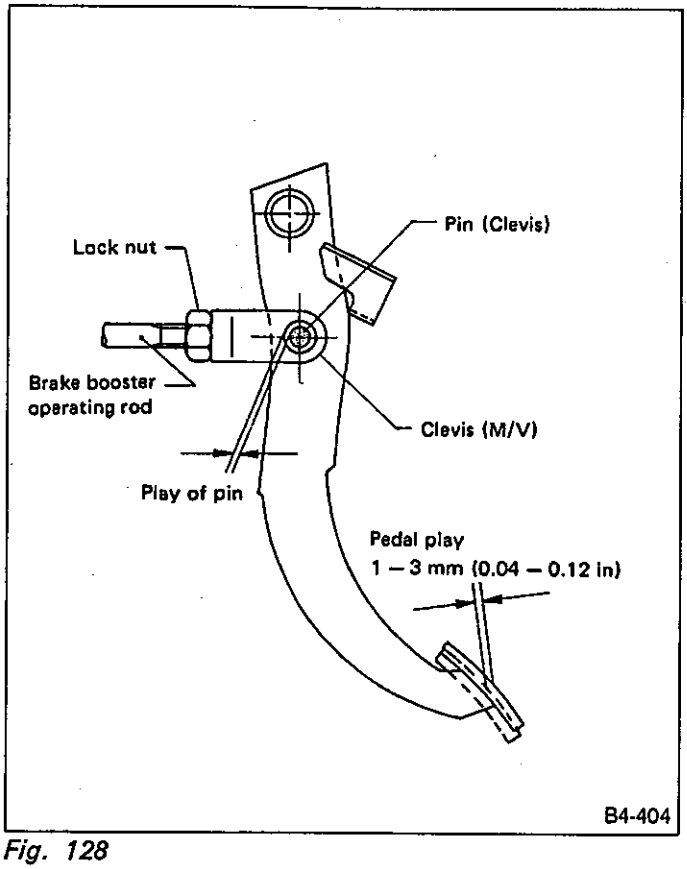

Fig. 128

(3) Depress the surface of brake pad by hand.
(4) If there is no free play between clevis pin and clevis, loosen lock nut for operating rod and adjust operating rod by turning in the direction that shortens it.

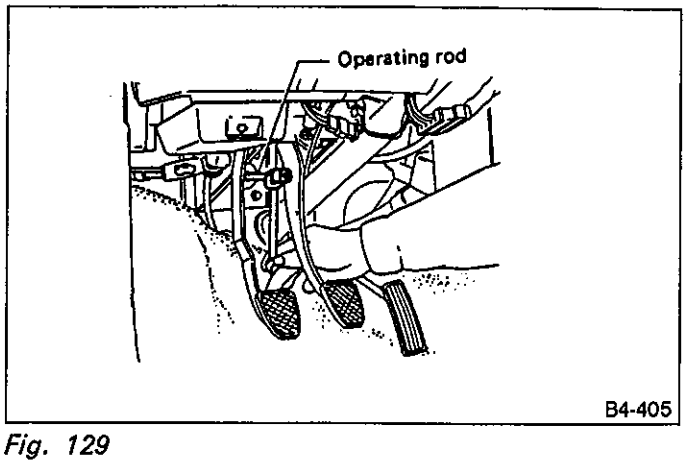

Fig. 129

8) Bleed air from brake system.

Torque (Air bleeder screw):
7 — 9 N•m (0.7 — 0.9 kg-m, 5.1 — 6.5 ft-lb)

9) Conduct road tests to ensure brakes do not drag.

C: OPERATION CHECK

When checking operation, be sure to securely apply the hand brake.

1. CHECKING WITHOUT USING GAUGES

This method cannot determine the exact portion which has failed, but it can provide a rough understanding of the nature of the failure if checking is conducted in accordance with the following procedure.

2. AIR TIGHTNESS CHECK

Start engine, and run it for 1 to 2 minutes, then turn it off. Depress brake pedal several times applying the same pedal force as that used in ordinary braking operations. The pedal stroke should be greatest on the 1st depression, and it should become smaller with each successive depression. If no change occurs in the pedal height while in a depressed state, brake booster is faulty.

In the event of defective operation, inspect the condition of the check valve and vacuum hose. Replace them if faulty and conduct the test again. If no improvement is observed, check precisely with gauges.

3. OPERATION CHECK

1) With engine off, depress brake pedal several times applying the same pedal force and make sure that the pedal height does not vary with each depression of the pedal.
2) With brake pedal depressed, start engine.
3) As engine starts, brake pedal should move slightly toward the floor. If no change occurs in the pedal height, brake booster is faulty.

If faulty, check precisely with gauges.

4. LOADED AIR TIGHTNESS CHECK

Depress brake pedal while engine is running, and turn off engine while the pedal is still depressed. Keep the pedal depressed for 30 seconds; if no change occurs in the pedal height, brake booster is functioning normally; if the pedal height increases, it is faulty.

If faulty, check precisely with gauges.

5. CHECKING WITH GAUGES

Connect gauges as shown in figure. After bleeding air from pressure gauges, proceed to each check.

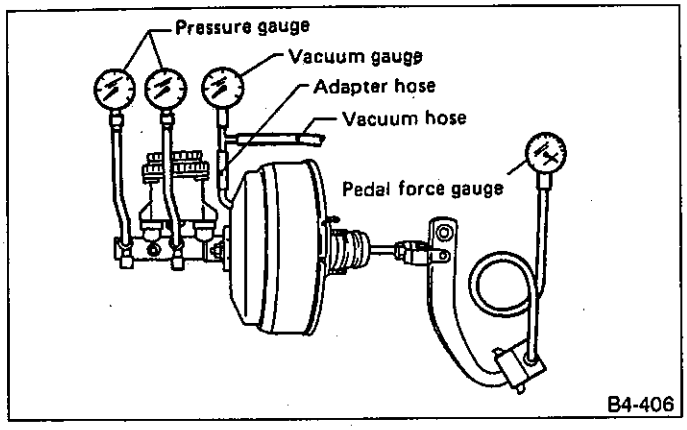

Fig. 130

6. AIR TIGHTNESS CHECK

1) Start engine and keep it running until a vacuum of 66.7 kPa (500 mmHg, 19.69 inHg) is indicated on vacuum gauge. Do not depress brake pedal.
2) Stop engine and watch the gauge. If the vacuum drop range is less than 3.3 kPa (25 mmHg, 0.98 inHg) within 15 seconds after stopping engine, brake booster is functioning properly.
If defective, the cause may be one of those listed below.

- Check valve malfunction
- Leak from vacuum hose
- Leak from the shell jointed portion or stud bolt welded portion
- Damaged diaphragm
- Leak from valve body seal and bearing portion
- Leak from plate & seal ASSY portion
- Leak from poppet valve ASSY portion

7. LOADED AIR TIGHTNESS CHECK

1) Start engine and depress brake pedal with pedal force of 196 N (20 kg, 44 lb). Keep engine running until a vacuum of 66.7 kPa (500 mmHg, 19.69 inHg) is indicated on vacuum gauge while the pedal is still depressed.
2) Stop engine and watch vacuum gauge.
If the vacuum drop range is less than 3.3 kPa (25 mmHg, 0.98 inHg) within 15 seconds after stopping engine, brake booster is functioning properly.
If defective, refer to "Air tightness check" described above.

8. LACK OF BOOSTING ACTION CHECK

Turn off engine, and set the vacuum gauge reading at "0". Then, check the fluid pressure when brake pedal is depressed. The pressure must be greater than the standard value listed below.

Brake pedal force	147N (15 kg, 33 lb)	294N (30kg, 66 lb)
DL•GL	785 kPa (8 kg/ cm², 114 psi)	2,158 kPa (22 kg/cm², 313 psi)
GX	588 kPa (6 kg/cm², 85 psi)	1,863 kPa (19 kg/cm², 270 psi)
TURBO	588 kPa (6 kg/cm², 85 psi)	1,863 kPa (19 kg/cm², 270 psi)
DL•GL•GX with ABS	588 kPa (6 kg/cm², 85 psi)	1,667 kPa (17 kg/cm², 242 psi)
TURBO with ABS	588 kPa (6 kg/cm², 85 psi)	1,667 kPa (17 kg/cm², 242 psi)

9. BOOSTING ACTION CHECK

Set the vacuum gauge reading at 66.7 kPa (500 mmHg, 19.69 inHg) by running engine. Then, check the fluid pressure when brake pedal is depressed. The pressure must be greater than the standard value listed below.

Brake pedal force	147N (15 kg, 33 lb)	294N (30kg, 66 lb)
DL•GL	5,492 kPa (56 kg/cm², 796 psi)	8,434 kPa (86 kg/cm², 1,223 psi)
GX	5,394 kPa (55 kg/cm²,782 psi)	9,219 kPa (94 kg/cm², 1,337 psi)
TURBO	4,904 kPa (50 kg/cm², 711 psi)	9,219 kPa (94 kg/cm², 1,337 psi)
DL•GL•GX with ABS	5,394 kPa (55 kg/cm²,782 psi)	10,003 kPa (102 kg/cm², 1,450 psi)
TURBO with ABS	5,002 kPa (51 kg/cm²,725 psi)	10,003 kPa (102 kg/cm², 1,450 psi)

D: HANDLING PRECAUTIONS

1) After protector has been removed from push-rod, do not turn the master cylinder side of brake booster downwards.

(1) If the master cylinder side is turned downwards, push-rod may come loose by virtue of its own weight, and reaction disc may drop into brake booster.

(2) Whether or not reaction disc has dropped can be determined by measuring the dimension "L".
The projected amount "L" of pushrod should be as follows:

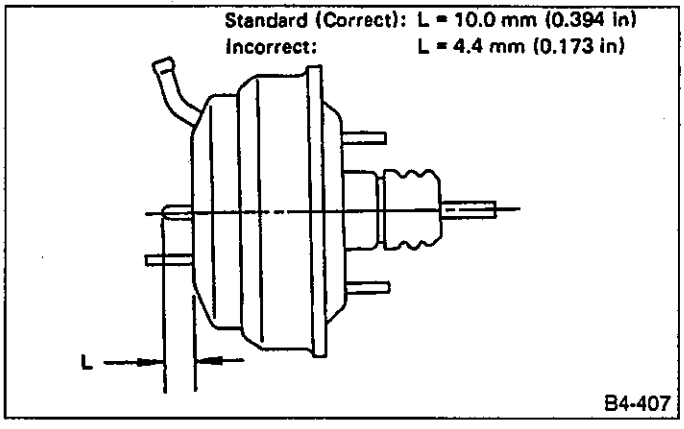

Fig. 131

(3) If protector is fitted correctly, reaction disc will not fall out.

2) Be careful not to drop brake booster. Brake booster should be discarded if it has been dropped.

3) Use special care when handling operating rod.
If excessive force is applied to operating rod, sufficient to cause a change in the angle in excess of ± 3°, it may result in damage to the power piston cylinder.

4) Use care when placing brake booster on the floor.

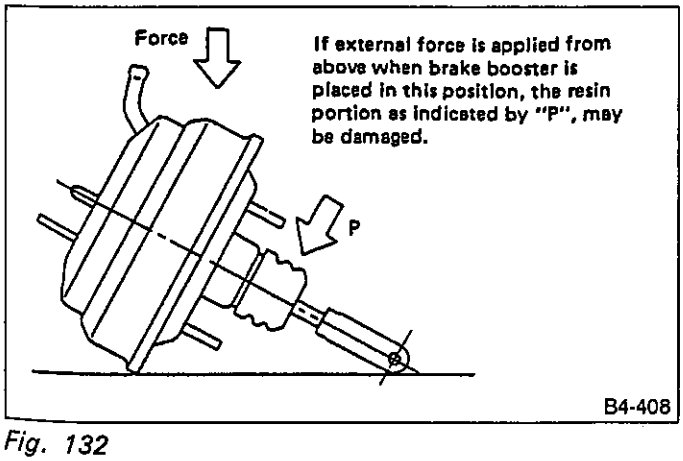

Fig. 132

7. Brake Hose

A: REMOVAL

1) Separate brake pipe from brake hose.
(Always use flare nut wrench and be careful not to deform flare nut.)

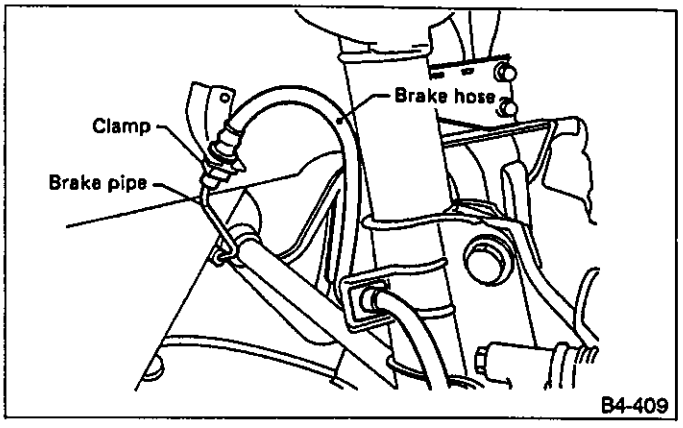

Fig. 133

2) Pull out clamp to remove brake hose.
3) Remove clamp at strut and union bolt.

B: INSTALLATION

1. FRONT BRAKE HOSE

1) Route end of brake hose (on caliper side) through hole in brake hose bracket at strut location.
2) Tighten end of brake hose at caliper using a union bolt.

Torque (Union bolt):
15 — 21 N•m (1.5 — 2.1 kg-m, 11 — 15 ft-lb)

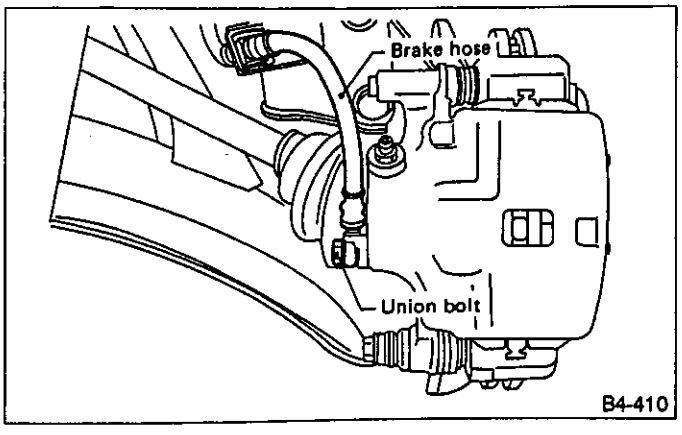

Fig. 134

3) Secure middle fitting of brake hose to bracket at strut location using a clamp.

4) Position disc in straight-forward direction and route brake hose through hole in bracket on wheel apron side. Be sure brake hose is not twisted.
5) Temporarily tighten flare nut to connect brake pipe and hose.
6) Fix brake hose with clamp at wheel apron bracket.
7) While holding hexagonal part of brake hose fitting with a wrench, tighten flare nut to the specified torque.

Torque (Brake pipe flare nut):
13 — 18 N•m (1.3 — 1.8 kg-m, 9 — 13 ft-lb)

8) Bleed air from the brake system.

2. REAR BRAKE HOSE

1) Pass brake hose through the hole of bracket, and lightly tighten flare nut to connect brake pipe.
2) Insert clamp upward to fix brake hose.
3) Perform the same procedures as before-mentioned in steps 7) and 8).

8. Hill-Holder

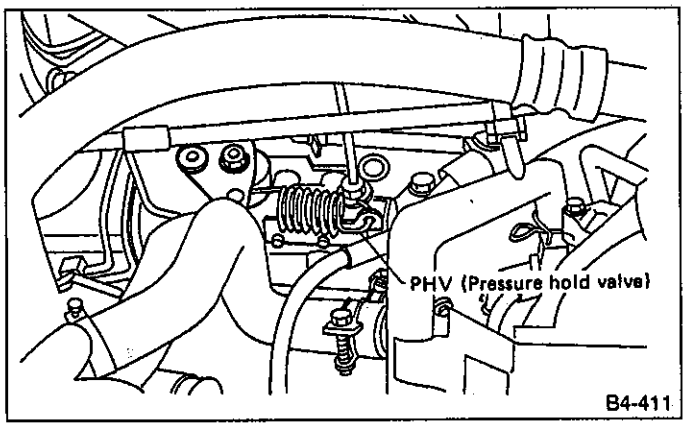

Fig. 135

A: REMOVAL

1) Drain brake fluid from reservoir on primary side of master cylinder.
2) Remove adjusting nut and cable clamp, and disconnect PHV cable from cable bracket on engine.
3) Detach PHV cable from clips.
4) Remove cable clamp, and disconnect PHV cable from PHV stay.

Carefully protect boots and inner cable from damage when disconnecting PHV cable.

5) Disconnect brake pipes from PHV.

a. Pay attention not to drop brake fluid onto body painting since it may dissolve paint.
b. Pay attention not to damage hexagonal head of flare nut by using pipe wrench without fail.

6) Detach PHV along with support from side frame.

Exercise utmost care to prevent foreign matter from entering into PHV when removing it.

B: INSPECTION

Check up removed parts as follows, and replace defective ones.
1) Check if boots of PHV cable are damaged or degraded, and if inner cable is damaged or corroded.
2) Check if return spring is worn out, damaged or corroded.
3) Confirm that rolling sound of ball is heard with PHV inclined and lever rotates smoothly.

Never disassemble PHV. Replace entire PHV ASSY if necessary.

C: INSTALLATION

1) Install PHV onto side frame.

Torque:
13 — 23 N•m (1.3 — 2.3 kg-m, 9 — 17 ft-lb)

2) Connect brake pipes to PHV.

Torque:
13 — 18 N•m (1.3 — 1.8 kg-m, 9 — 13 ft-lb)

Confirm that brake pipes are not deformed and/or damaged. Replace them with new ones if necessary.

3) Install PHV cable to PHV stay.

If cable clamp (and clips) is damaged, replace it with a new one.

4) Connect PHV cable with clips.

Avoid sharp bending of PHV cable as it may cause breakage.

5) Install PHV cable onto cable bracket on engine.
6) Apply grease to the following points.
- Hook portion of return spring
- Cable end portion of lever

Grease:
SUNLIGHT 2 (P/N 003602010)

7) Be sure to bleed air from the system.

After replacing PHV cable or clutch cable with new one, operate clutch pedal about 30 times as a running-in operation prior to adjustment.

D: ADJUSTMENTS

1) Confirm stopping and starting performances by activating hill-holder on an uphill road of 3° or higher inclination.

(1) If vehicle does not stop;
Tighten adjust nut of PHV cable.

(2) If vehicle does not start properly;

- Case A — When hill-holder is released later than engagement of clutch pedal (Engine tends to stall.):
  Loosen adjust nut gradually until smooth starting is enabled.
- Case B — When hill-holder is released earlier than engagement of clutch pedal (Vehicle slips down slightly.):
  Tighten adjust nut so that hill-holder is released later than engagement of clutch pedal (status in Case A). Then make adjustment the same as in Case A.

Whenever turning adjust nut, prevent PHV cable from revolving as shown in following figure.

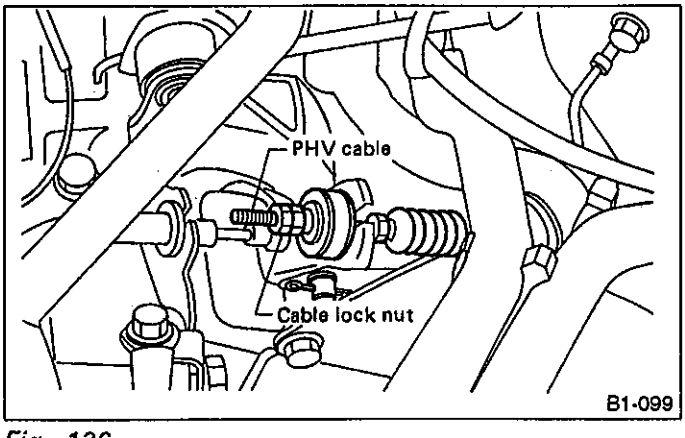

Fig. 136

9. Parking Brake Lever

A: REPLACEMENT

1) Remove console box from front floor.
2) Disconnect electric connector for parking brake switch.
3) Loosen parking brake adjuster, and remove inner cable end from equalizer.
4) Remove parking brake lever.
5) Install parking brake lever in the reverse order of removal.

Torque (Lever installing bolt):
13 — 23 N•m (1.3 — 2.3 kg-m, 9 — 17 ft-lb)

6) Adjust parking brake lever by turning adjuster until parking brake lever stroke is set at 7 to 8 notches with operating force of 196 N (20 kg, 44 lb).
7) Tighten lock nut.

Torque (Adjuster lock nut):
4.4 — 7.4 N•m (0.45 — 0.75 kg-m, 3.3 — 5.4 ft-lb)

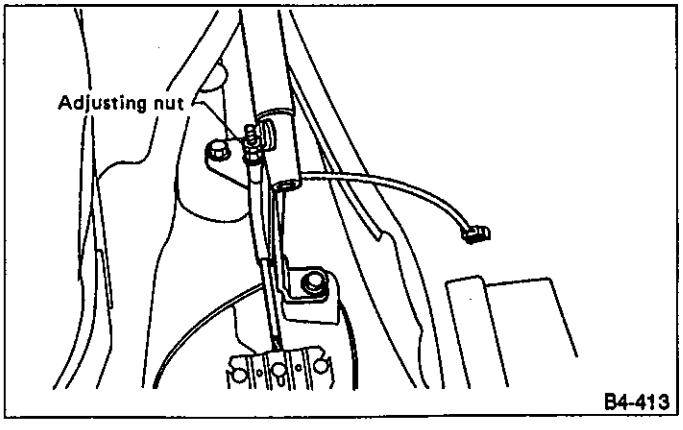

Fig. 137

10. Parking Brake Cable

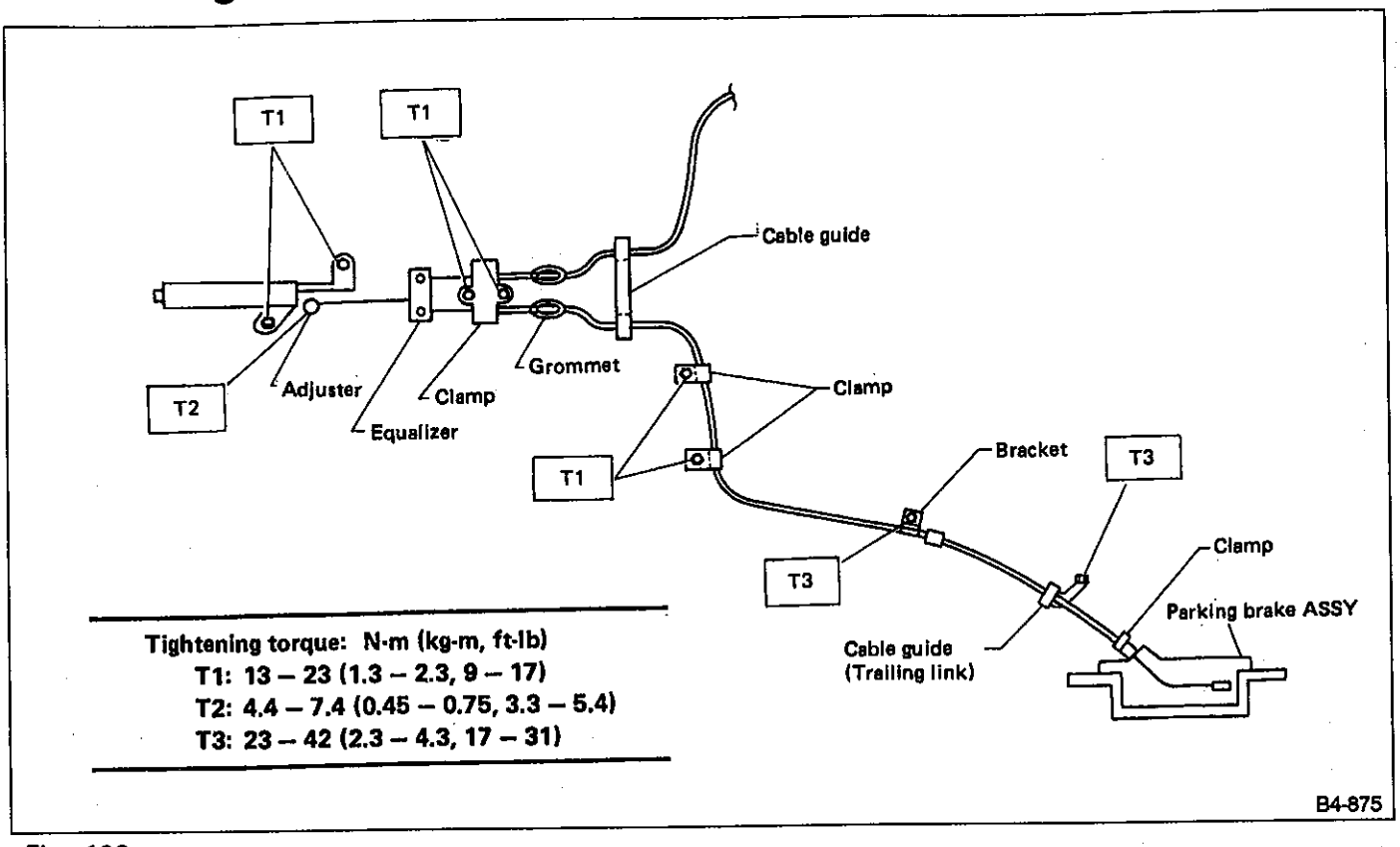

Fig. 138

A: REPLACEMENT

1) Remove rear tires and wheels.
2) Remove console box from front floor.
3) Loosen parking cable adjuster, then remove inner cable end from equalizer, and detach clamps.

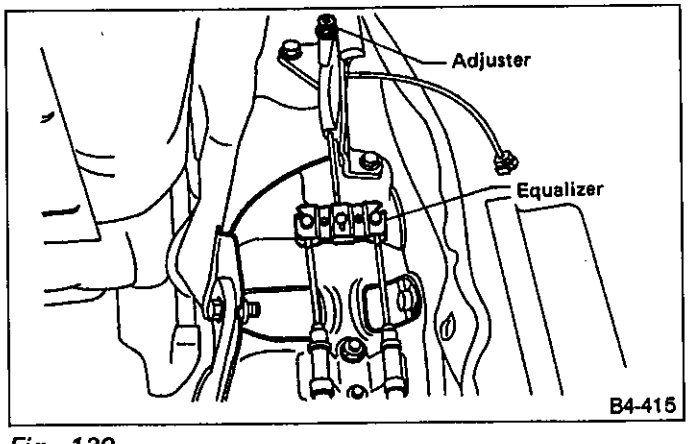

Fig. 139

4) Pull out parking brake cable from parking brake ASSY. ⟨Ref. to 4-4 [W4A0].⟩
5) Pull out clamp from parking brake ASSY.
6) Remove bolt and bracket from trailing link bracket.
7) Remove bolt and clamp from rear floor.

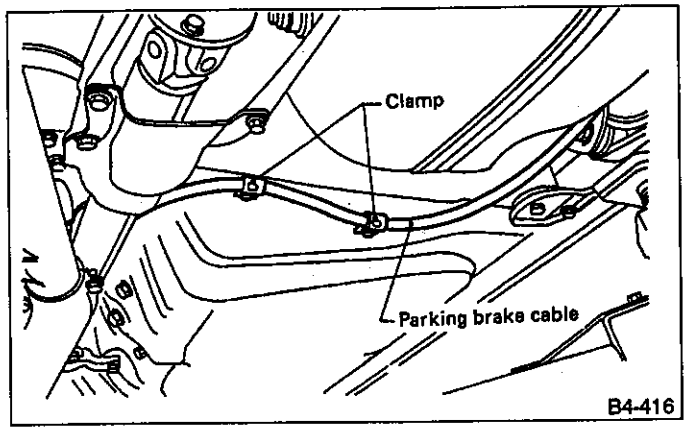

Fig. 140

8) Detach grommet from rear floor.
9) Remove cable ASSY from cabin by forcibly pulling it backward.
10) Detach parking brake cable from cable guide at rear trailing link.
11) Install (new) parking brake ASSY in the reverse order of removal.

a. Be sure to pass cable through cable guide inside the tunnel.

b. Be sure to adjust the lever stroke. ⟨Refer to 4-4 [W4D1].⟩

11. Air Bleeding

A: BLEEDING PROCEDURE

a. The FMVSS No. 116, fresh DOT3 or 4 brake fluid must be used.
b. Cover bleeder with waste cloth, when loosening it, to prevent brake fluid from being splashed over surrounding parts.
c. Avoid mixing different brands of brake fluid to prevent degrading the quality of the fluid.
d. Be careful not to allow dirt or dust to get into the reservoir tank.
e. During bleeding operation, keep the brake reserve tank filled with brake fluid to eliminate entry of air.
f. Brake pedal operating must be very slow.
g. For convenience and safety, it is advisable to have two man working.

1) Make sure that there is no leak from joints and connections of the brake system.
2) Fit one end of vinyl tube into the air bleeder and put the other end into a brake fluid container.

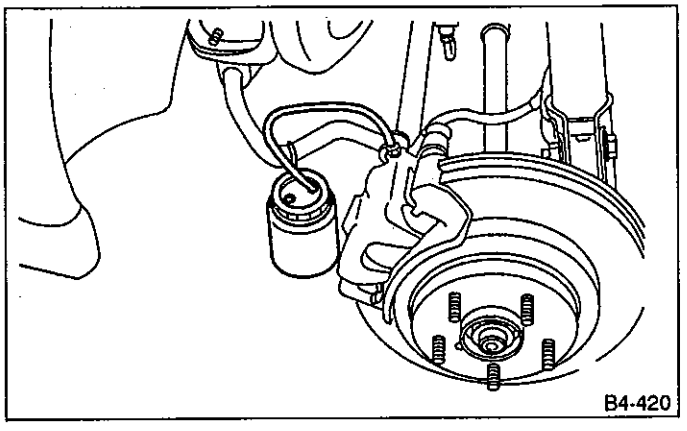

Fig. 141

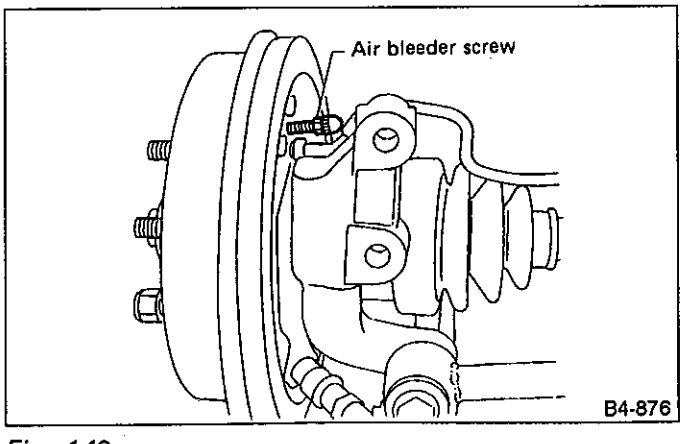

Fig. 142

3) Slowly depress the brake pedal and keep it depressed. Then, open the air bleeder to discharge air together with the fluid.
Release air bleeder for 1 to 2 seconds.
Next, with the bleeder closed, slowly release the brake pedal.
Repeat these steps until there are no more air bubbles in the vinyl tube.
Allow 3 to 4 seconds between two brake pedal operations.
4) Tighten air bleeder securely when no air bubbles are visible.

Tightening torque (Bleeder screw):
7 — 9 N•m (0.7 — 0.9 kg-m, 5.1 — 6.5 ft-lb)

5) Bleed air from brake system in numerical sequence shown in Figure 143 and 144 using above steps as a guide.
Air bleeding of hydraulic unit is performed only on ABS equipped models.

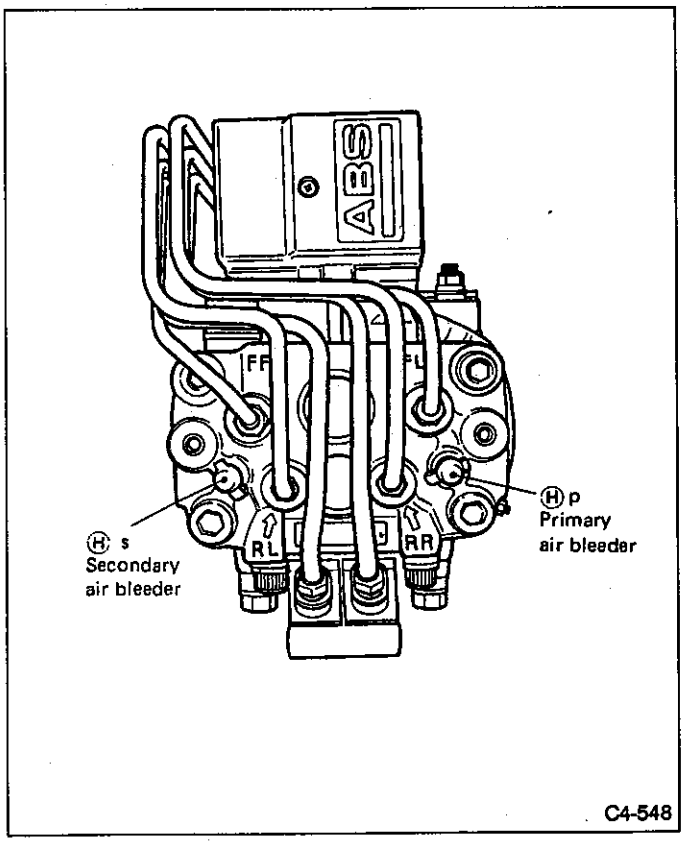

Fig. 143 Hydraulic unit

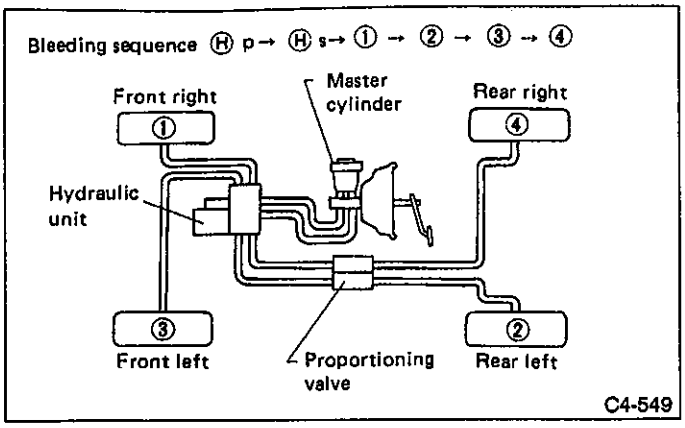

Fig. 144

6) If the pedal action is soft and spongy, or pedal travels excessively, the system must be bled of air again.
7) Depress brake pedal with a force of approximately 294 N (30 kg, 66 lb) and hold it there for approximately 20 seconds. At this time check pedal to see if it shows any unusual movement.
Visually inspect bleeder screws and brake pipe joints to make sure that there is no fluid leakage.
8) Add brake fluid to the required level (MAX level) of reserve tank.
9) Install wheels, and drive car for a short distance between 2 to 3 km (1 to 2 miles) to make sure that brakes are operating properly.

12. Brake Fluid Replacement

To always maintain the brake fluid characteristics, replace the brake fluid according to maintenance schedule or earlier than that when used in severe condition.

A: REPLACEMENT

a. The FMVSS No. 116, fresh DOT3 or 4 brake fluid must be used.
b. Cover bleeder with waste cloth, when loosening it, to prevent brake fluid from being splashed over surrounding parts.
c. Avoid mixing different brands of brake fluid to prevent degrading the quality of the fluid.
d. Be careful not to allow dirt or dust to get into the reservoir tank.
e. During bleeding operation, keep the brake reserve tank filled with brake fluid to eliminate entry of air.
f. Brake pedal operating must be very slow.
g. For convenience and safety, it is advisable to have two man working.
h. The amount of brake fluid required is approximately 300 mℓ (10.1 US fl oz, 10.6 Imp fl oz) for total brake system.

1) Either jack up vehicle and place a safety stand under it, or left up vehicle.
2) Remove both front and rear wheels.
3) Draw out the brake fluid from master cylinder with syringe.
4) Refill reservoir tank with recommended brake fluid.

Recommended brake fluid
FMVSS No. 116, fresh DOT3 or 4 brake fluid

5) Install one end of a vinyl tube onto the air bleeder of and insert the other end of the tube into a container to collect the brake fluid.

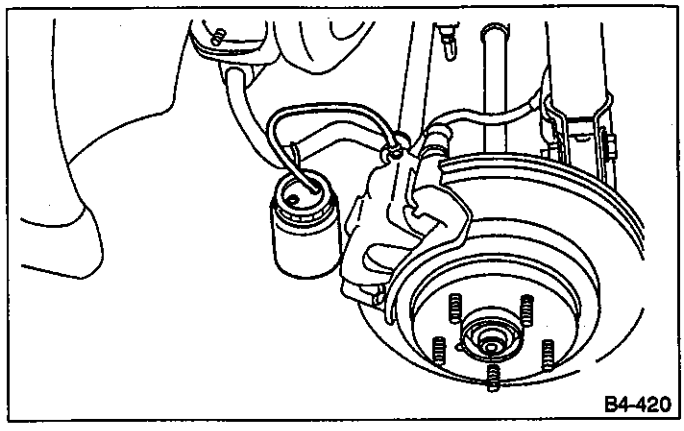

Fig. 145

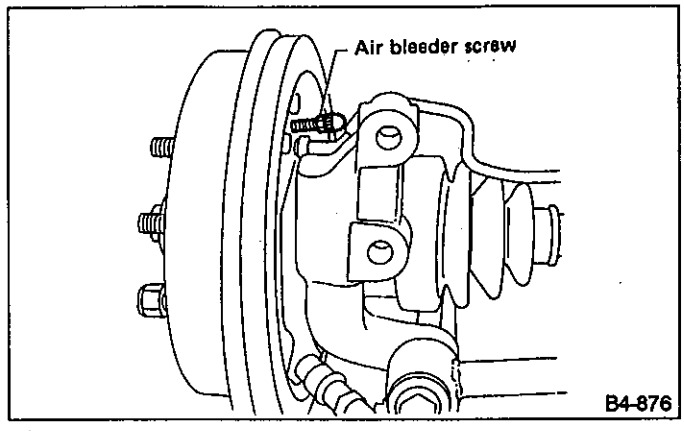

Fig. 146

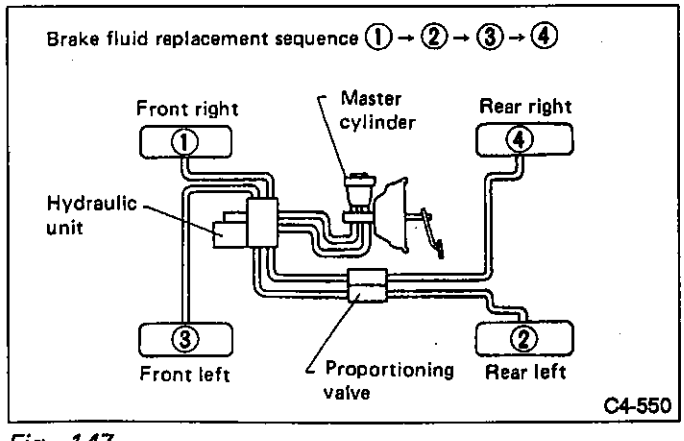

Fig. 147

6) Instruct your co-worker to depress the brake pedal slowly two or three times and then hold it depressed.

7) Loosen bleeder screw approximately 1/4 turn until a small amount of brake fluid drains into container, and then quickly tighten screw.
8) Repeat steps 6) and 7) above until there are no air bubbles in drained brake fluid and new fluid flows through vinyl tube.

Add brake fluid as necessary while performing the air bleed operation, in order to prevent the tank from running short of brake fluid.

9) After completing the bleeding operation, hold brake pedal depressed and tighten screw and install bleeder cap.

Tightening torque (Bleeder screw):
7 — 9 N•m (0.7 — 0.9 kg-m, 5.1 — 6.5 ft-lb)

10) Bleed air from each wheel cylinder using the same procedures as described in steps 6) through 7) above.
11) Depress brake pedal with a force of approximately 294 N (30 kg, 66 lb) and hold it there for approximately 20 seconds. At this time check pedal to see if it shows any unusual movement.
Visually inspect bleeder screws and brake pipe joints to make sure that there is no fluid leakage.
12) Install wheels, and drive car for a short distance between 2 to 3 km (1 to 2 miles) to make sure that brakes are operating properly.

13. Proportioning Valve

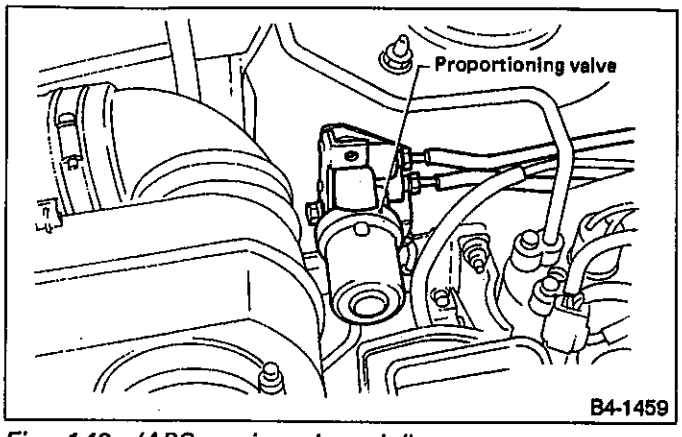

Fig. 148 (ABS equipped model)

A: INSPECTION

1) Install the oil pressure gauges to measure the master cylinder fluid pressure (front wheel brake fluid pressure) and rear wheel cylinder fluid pressure.
2) Bleed air from the oil pressure gauges.
3) Check the master cylinder fluid pressure and rear wheel cylinder fluid pressure.
The standard values are shown in figure.

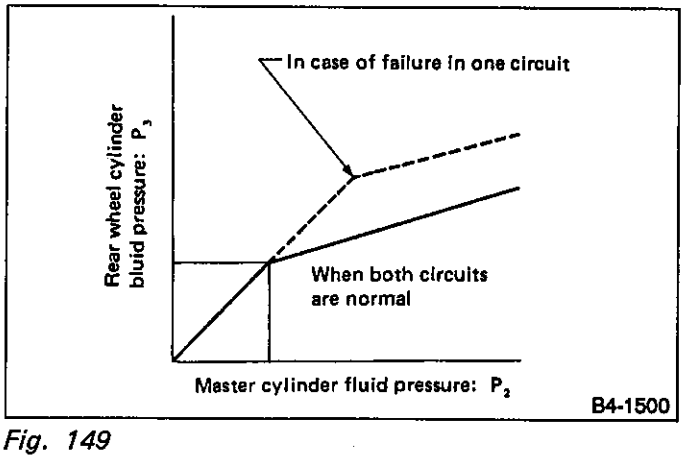

Fig. 149

4) For the oil pressure in case of split point, refer to A: SPECIFICATIONS [S0A0].

B: REMOVAL

1) Remove brake pipe from proportioning valve at four places.
2) Remove proportioning valve from its bracket.

Do not disassemble or adjust the proportioning valve. (The proportioning valve must be replaced as an assembly.)

C: INSTALLATION

1) Install proportioning valve to bracket.
2) Connect brake pipes correctly to proportioning valve.
3) Bleed air, then check each joint of brake pipe for oil leaks.

Tightening torque: N•m (kg-m, ft-lb)
Proportioning valve to brake pipe flare nut
13 — 18 (1.3 — 1.8, 9 — 13)
Proportioning valve to bracket
Normal brake vehicle:
20.1 — 28.9 (2.05 — 2.95, 14.8 — 21.3)
ABS equipped vehicle:
13 — 23 (1.3 — 2.3, 9 — 17)

14. ABS Sensor

A: REMOVAL

1) Disconnect front ABS sensor located in engine compartment.
2) Remove bolts which secure sensor harness to bracket.

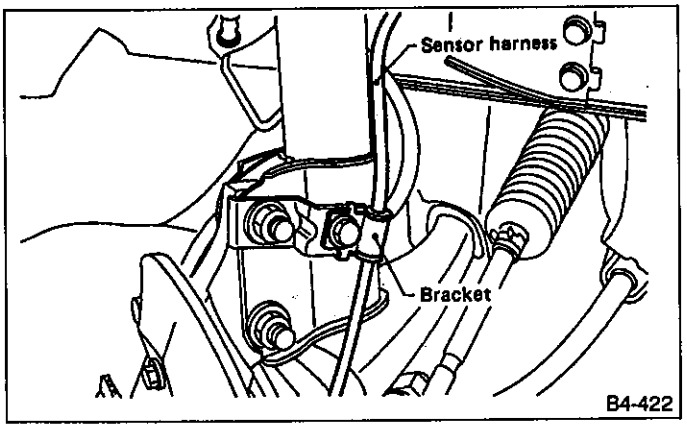

Fig. 150

3) Remove bolts which secure front ABS sensor to housing, and remove front ABS sensor.

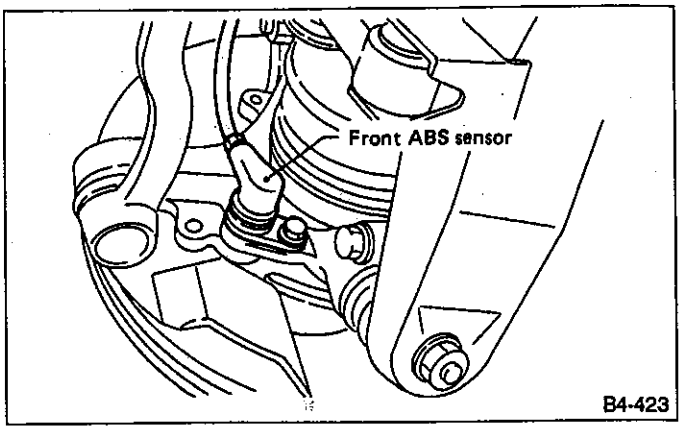

Fig. 151

Be careful not to damage pole piece located at tip of the sensor during removal.

4) Remove front disc brake caliper and disc rotor from housing after removing front tire.
5) Remove front drive shaft and housing & hub ASSY. ⟨Ref. to 4-2 [W1A0].⟩
6) Remove tone wheel while removing hub from housing & hub ASSY. ⟨Ref. to 4-2 [W1B0].⟩

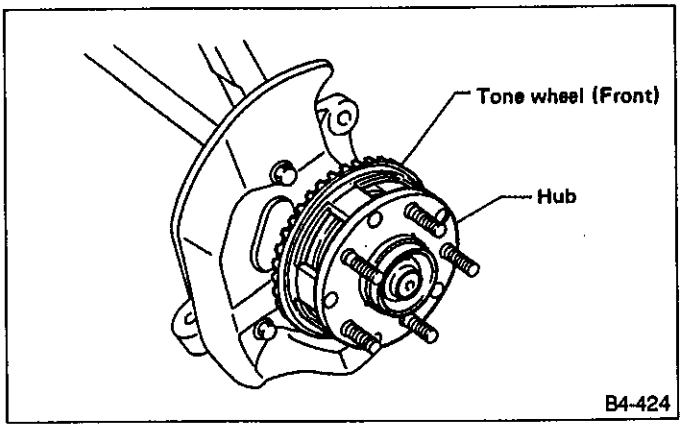

Fig. 152

Be careful not to damage teeth faces of tone wheel during removal.

7) Remove rear seat and disconnect rear speed sensor connector.
8) Remove rear sensor harness bracket from rear trailing link.
9) Remove rear back plate from rear speed sensor.

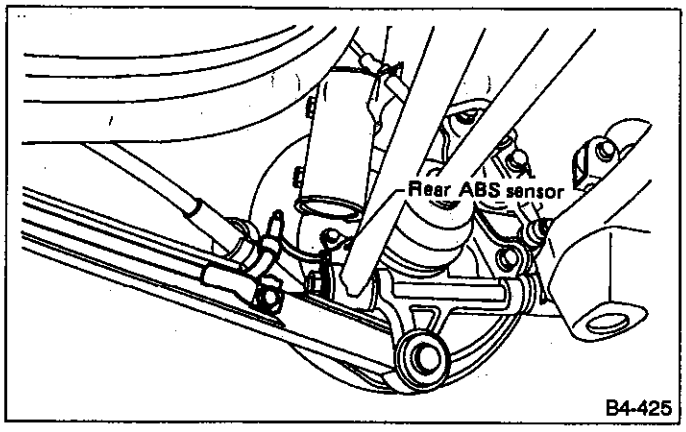

Fig. 153

10) Remove rear tone wheel while removing hub from housing & hub ASSY. ⟨Ref. to 4-2 [W3A0].⟩

a. Be careful not to damage pole piece of sensor and teeth faces.

b. Do not pull sensor harness during removal.

B: INSPECTION

1. ABS SENSOR

1) Check pole piece of speed sensor for foreign particles or damage. If necessary, clean pole piece or replace ABS sensor.

2) Measure resistance between ABS sensor terminals.

ABS sensor	Model	Terminal No.	Standard
Front - LH	4WD	22 and 4	1.0± 0.2 kΩ
	FWD	5 and 4	
Front - RH	ALL	11 and 21	
Rear - LH	ALL	7 and 9	
Rear - RH	ALL	24 and 26	
Front - LH	4WD	22 and 10, 20, 34	More than 1,000 kΩ (Insulation resistance)
	FWD	5 and 10, 20, 34	
Front - RH	ALL	11 and 10, 20, 34	
Rear - LH	ALL	7 and 10, 20, 34	
Rear - RH	ALL	24 and 10, 20, 34	

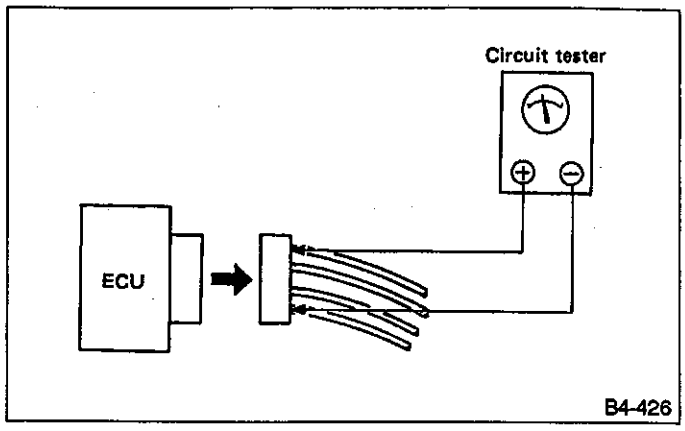

Fig. 154

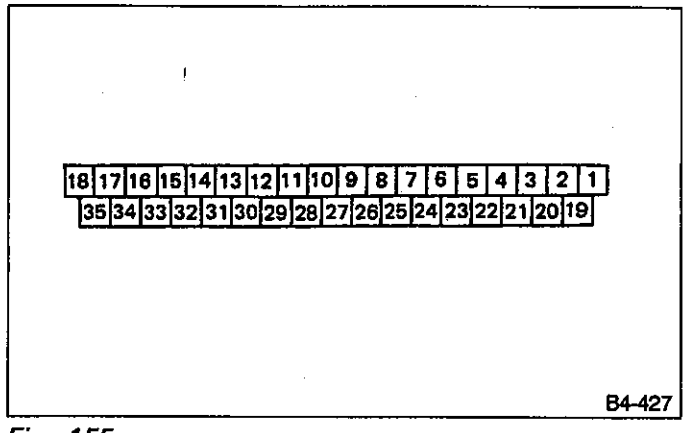

Fig. 155

a. If resistance is outside the standard value, replace ABS sensor with new one or adjust sensor gap between ABS sensor and tone wheel.

b. Check ABS sensor cable for discontinuity. If necessary, replace with a new one.

2. TONE WHEEL

1) Check tone wheel's teeth (44 pieces) for cracks or dents. If necessary, replace tone wheel with a new one.

2) Clearances (sensor gaps) should be measured one by one to ensure tone wheel and ABS sensor are installed correctly.

ABS sensor clearance:
Front
0.9 — 1.4 mm (0.035 — 0.055 in)
Rear
0.7 — 1.2 mm (0.028 — 0.047 in)

a. If clearance is narrow, adjust by using spacer (P/# 26755AA000)

b. If clearance is wide, check the outputted voltage then replace ABS sensor or tone wheel if the outputted voltage is outside the specification.

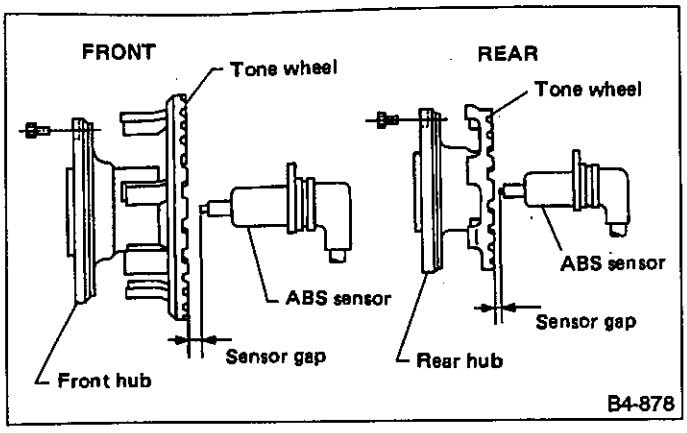

Fig. 156

3. OUTPUT VOLTAGE

1) Output voltage can be checked by the following method. Install resistor and condenser as follows, then rotate wheel about 2.75 km/h (1.7 MPH) or equivalent.

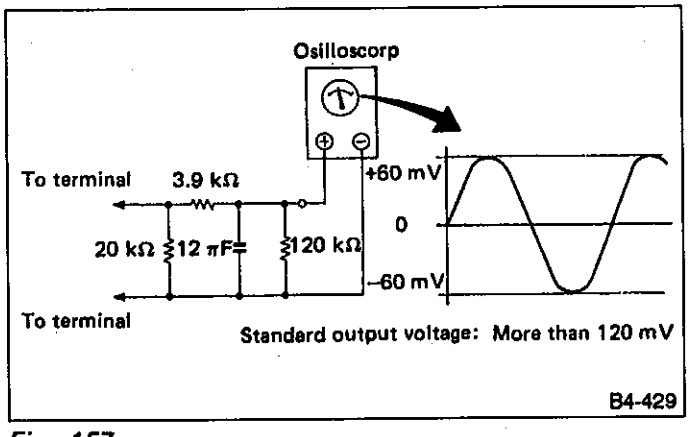

Fig. 157

Regarding terminal No., please refer to item ABS SENSOR.

C: INSTALLATION

1. FRONT ABS SENSOR

1) Install tone wheel on hub, then install housing on hub ASSY. ⟨Ref. to 4-2 [W1D0].⟩
2) Temporarily install front ABS sensor on housing.

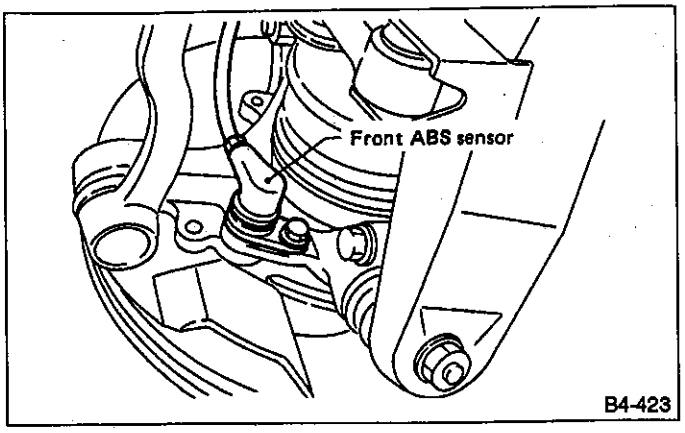

Fig. 158

Be careful not to strike ABS sensor's pole piece and tone wheel's teeth against adjacent metal parts during installation.

3) Install front driver shaft to hub spline and transmission spindle. ⟨Ref. to 4-2 [W1D0].⟩
4) Install front ABS sensor on strut and wheel apron bracket.

Tightening torque:
23 — 42 N•m (2.3 — 4.3 kg-m, 17 — 31 ft-lb)

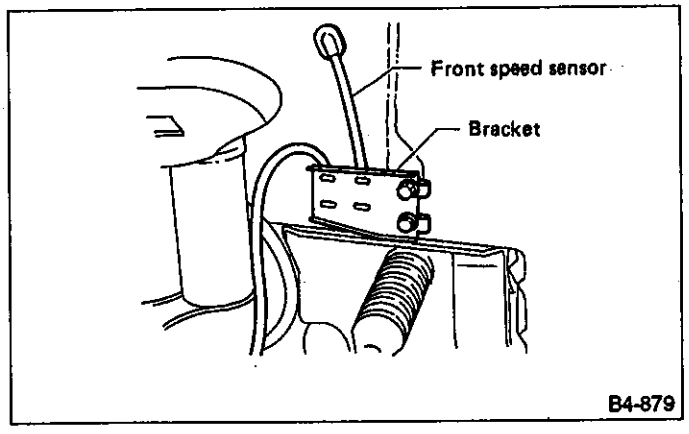

Fig. 159

5) Place a thickness gauge between ABS sensor's pole piece and tone wheel's tooth face. After standard clearance is obtained over the entire perimeter, tighten ABS sensor on housing to specified torque.

ABS sensor standard clearance:
0.9 — 1.4 mm (0.035 — 0.055 in)

Tightening torque:
23 — 42 N•m (2.3 — 4.3 kg-m, 17 — 31 ft-lb)

If the clearance is outside specifications, readjust.

2. REAR ABS SENSOR

1) Install rear tone wheel on hub, then rear housing on hub COMPL. ⟨Ref. to 4-2.⟩
2) Temporarily install rear ABS sensor on back plate.

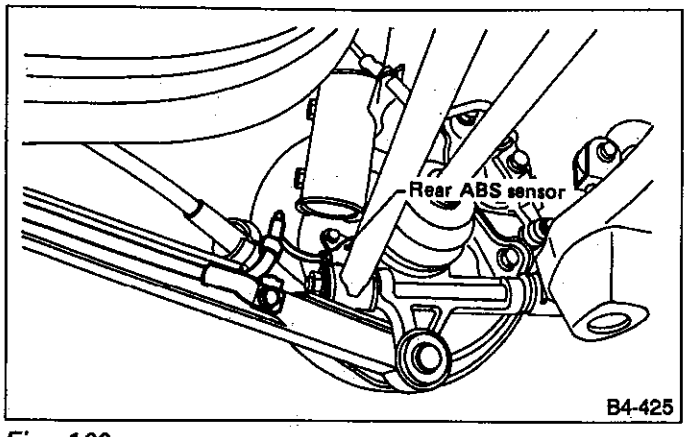

Fig. 160

Be careful not to strike ABS sensor's pole piece and tone wheel's teeth against adjacent metal parts.

3) Install rear drive shaft to rear housing and rear differential spindle. ⟨Ref. to 4-2.⟩
4) Install rear sensor harness on rear trailing link.

Tightening torque:
23 — 42 N•m (2.3 — 4.3 kg-m, 17 — 31 ft-lb)

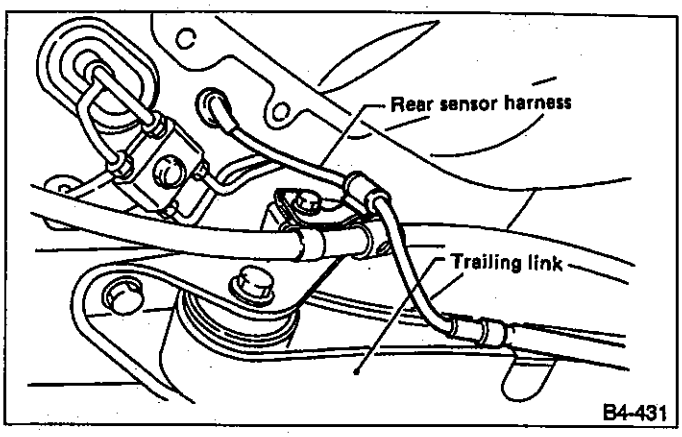

Fig. 161

5) Place a thickness gauge between ABS sensor's pole piece and tone wheel's tooth face. After standard clearance is obtained over the entire perimeter, tighten ABS sensor on back plate to specified torque.

Speed sensor standard clearance:
0.7 — 1.2 mm (0.028 — 0.047 in)

Tightening torque:
23 — 42 N•m (2.3 — 4.3 kg-m, 17 — 31 ft-lb)

If the clearance is outside specifications, readjust.

15. Hydraulic Unit for ABS System

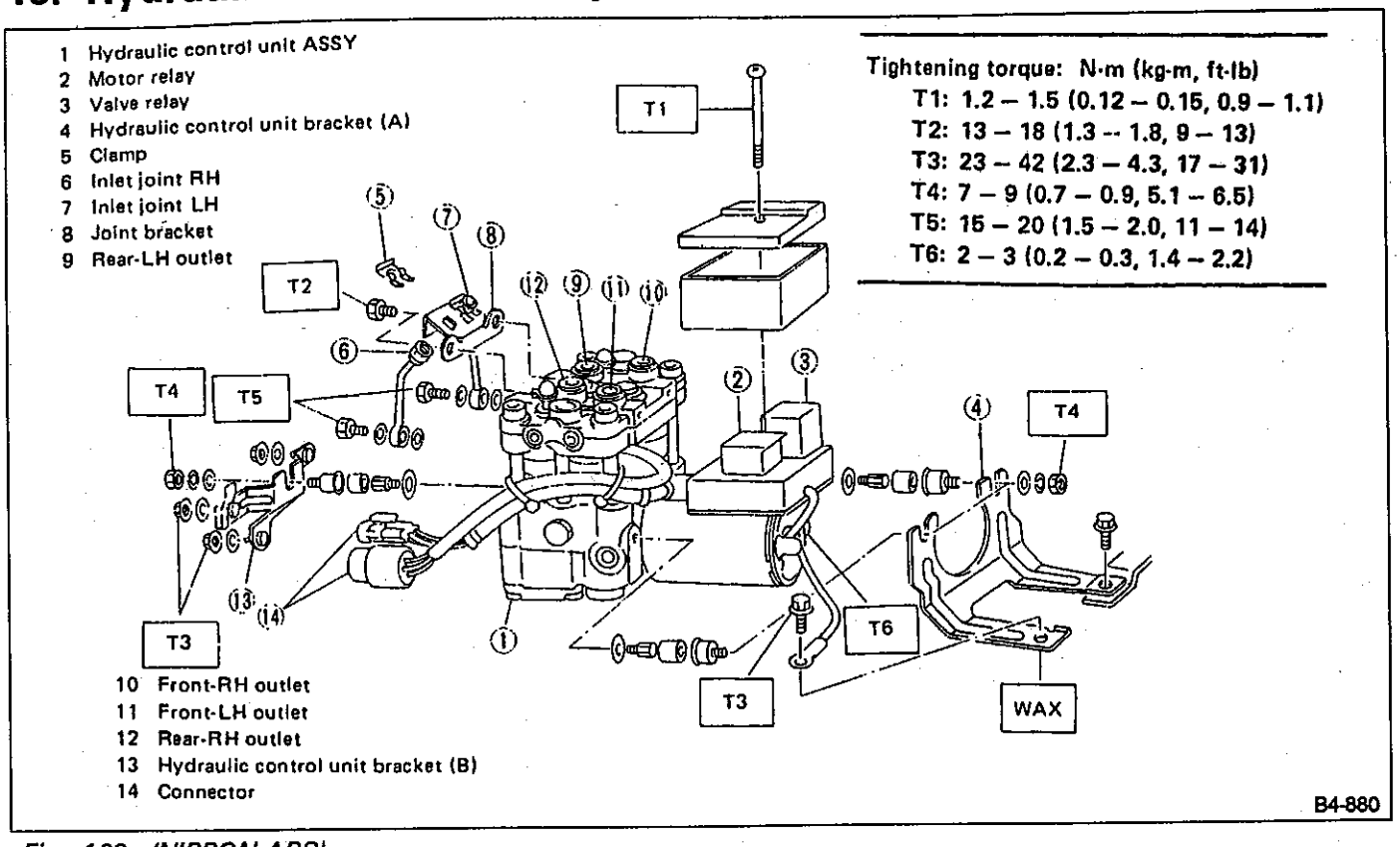

Fig. 162 (NIPPON ABS)

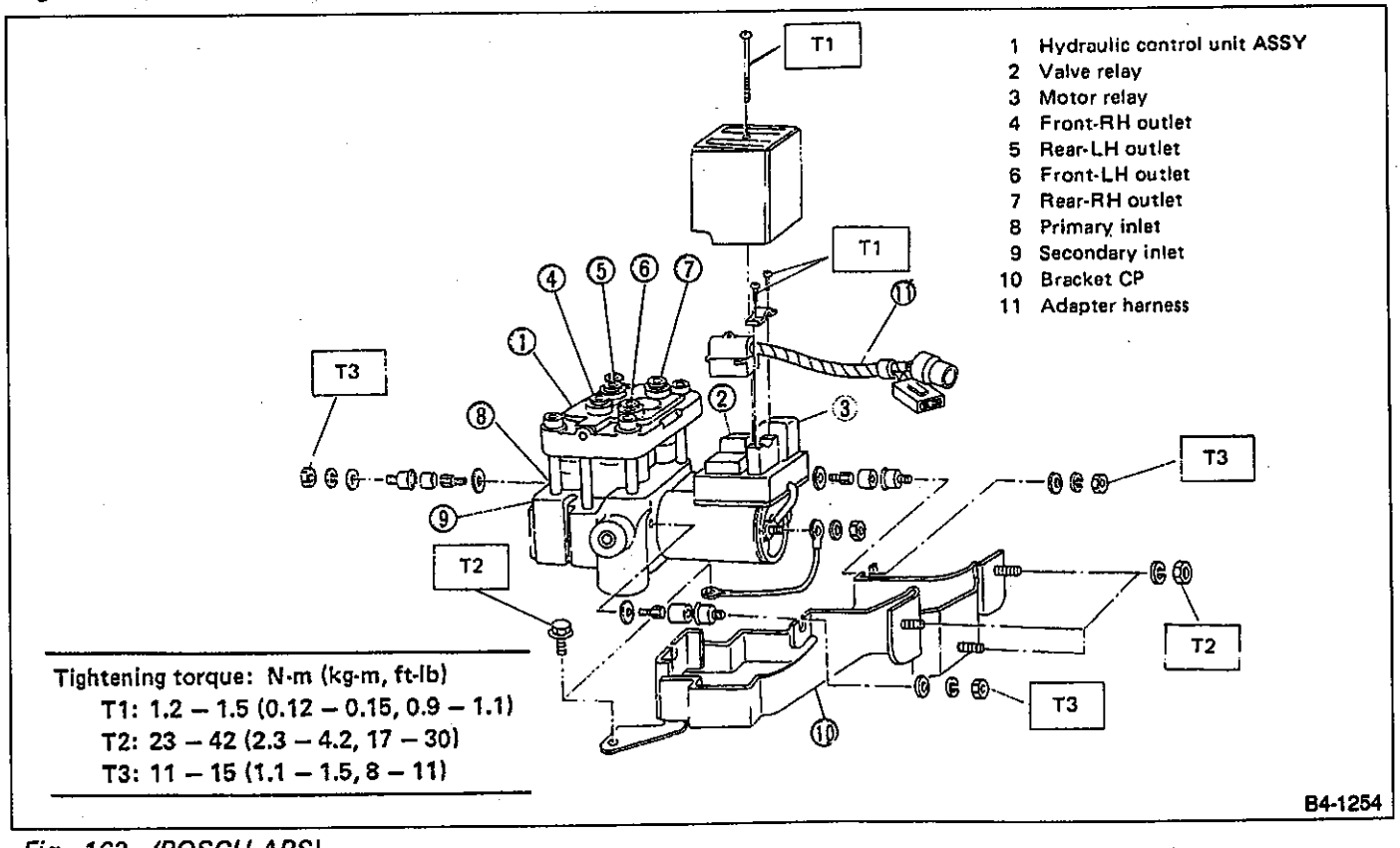

Fig. 163 (BOSCH ABS)

A: REMOVAL

1) Remove canister from engine compartment to facilitate removal of hydraulic unit.
2) Disconnect brake pipes from hydraulic unit and plug open joints to prevent entry of foreign particles.
3) Remove screws which secure hydraulic unit's relay box cover.

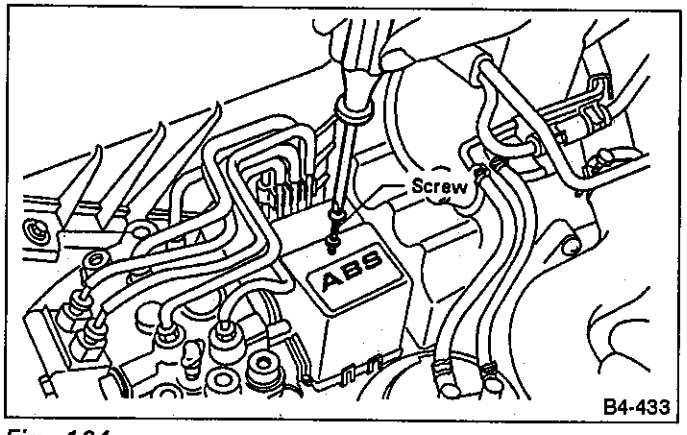

Fig. 164

4) Remove bolts which secure hydraulic unit to bracket, and remove hydraulic unit from engine compartment.

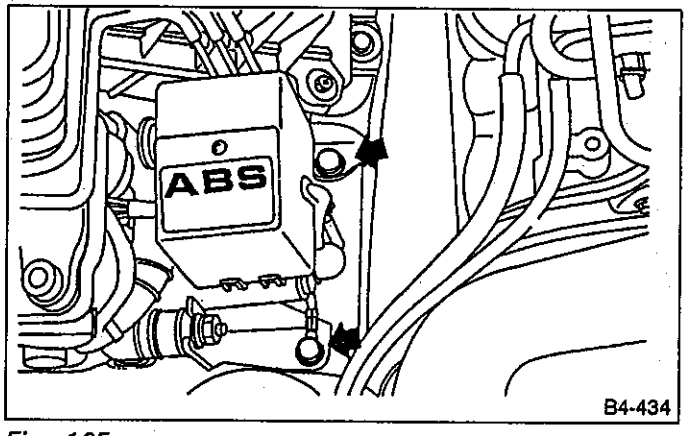

Fig. 165

a. Hydraulic unit cannot be disassembled. Do not attempt to loosen bolts and nuts.
b. Do not drop or bump hydraulic unit.
c. Do not turn the hydraulic unit upside down or place it on its side.
d. Be careful to prevent foreign particles from getting into hydraulic unit.
e. When a new hydraulic unit is installed, apply a coat of rust-preventive wax (Nippeco LT or GB) to bracket attaching bolts after tightening.
f. Do not pull harness disconnecting harness connector.

B: INSPECTION

1) Check bracket (on vehicle) for looseness.
2) Check connected and fixed condition of connector.
3) Open hydraulic unit relay box and check for discontinuity or short-circuits.

	Condition	Terminal number	Standard	Diagram	Terminal location
Valve relay	Turning off electricity.	85 — 86	93 — 113 Ω	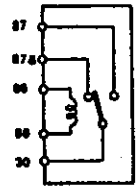	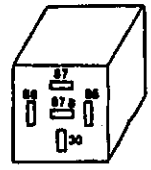
		30 — 87a	0 Ω		
		30 — 87	∞		
	Turning on electricity between 85 and 86. (DC 12 V)	30 — 87a	0Ω		
		30 — 87	0Ω		
			—		
Motor relay	Turning off electricity.	85 — 86	72 — 88 Ω	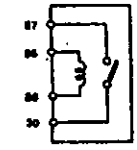	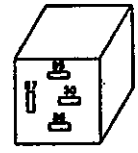
		30 — 87	∞		
	Turning on electricity between 85 and 86. (DC 12 V)	30 — 87	0 Ω		

B4-435

Fig. 166

C: INSTALLATION

1) Install relay box cover on hydraulic unit.

Tightening torque:
1.2 — 1.5 N•m (0.12 — 0.15 kg-m, 0.9 — 1.1 ft-lb)

2) Install hydraulic unit after tightening bracket and motor ground lead as a unit.

Tightening torque:
23 — 42 N•m (2.3 — 4.3 kg-m, 17 — 31 ft-lb)

3) Connect brake pipes to their correct hydraulic unit connections.

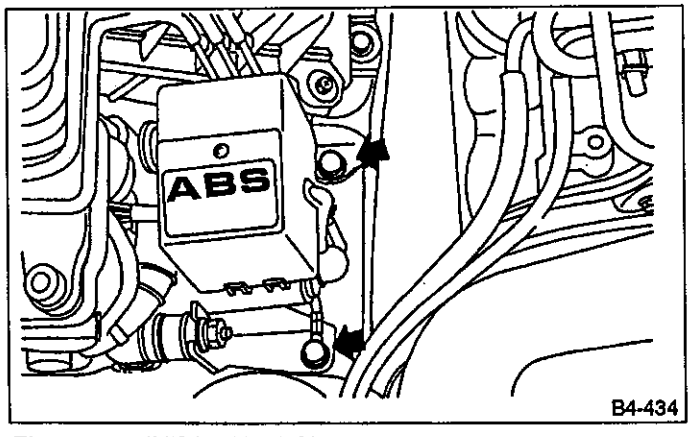

Fig. 167 (NIPPON ABS)

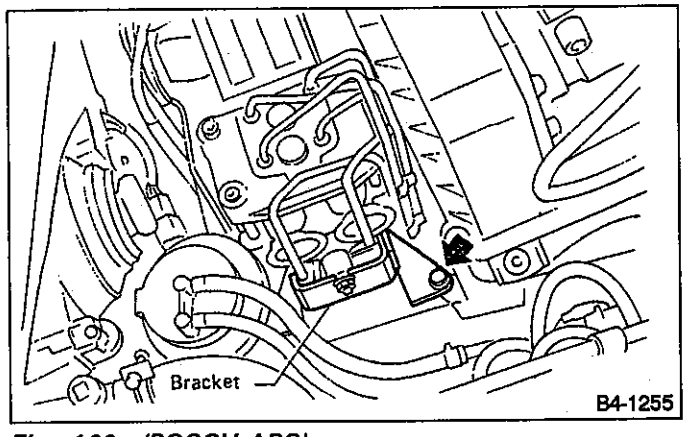

Fig. 168 (BOSCH ABS)

Tightening torque:
13 — 18 N•m (1.3 — 1.8 kg-m, 9 — 13 ft-lb)

16. Electronic Control Unit for ABS System

A: REMOVAL

1) Remove floor mat located under lower right side of front seat.
2) Remove bolts which secure electronic control unit to body.

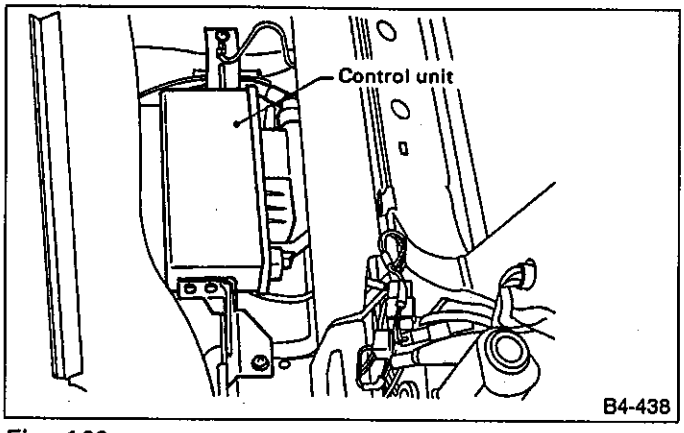

Fig. 169

3) Remove screws which secure connector to electronic control unit and disconnect connector.

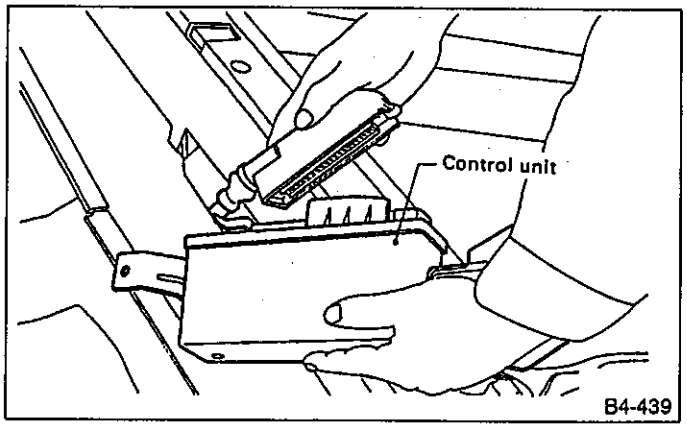

Fig. 170

B: INSPECTION

Check that connector is connected correctly and that connector terminal sliding resistance is correct.

C: INSTALLATION

1) Connect connector to electronic control unit.

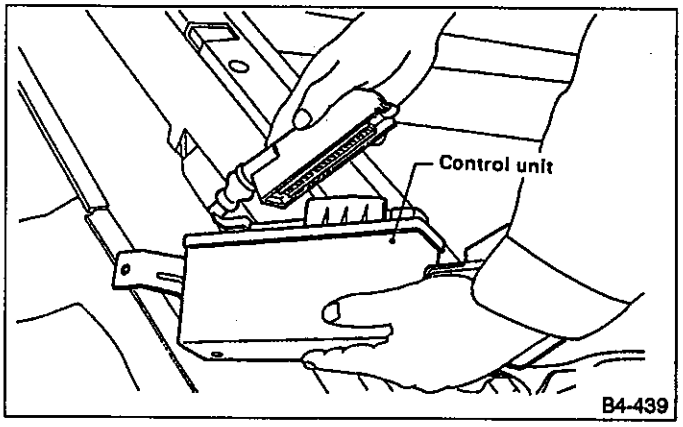

Fig. 171

2) Install electronic control unit on body.

17. G Sensor for ABS System

A: REMOVAL AND INSTALLATION

The G sensor is located on the right front wheel apron.

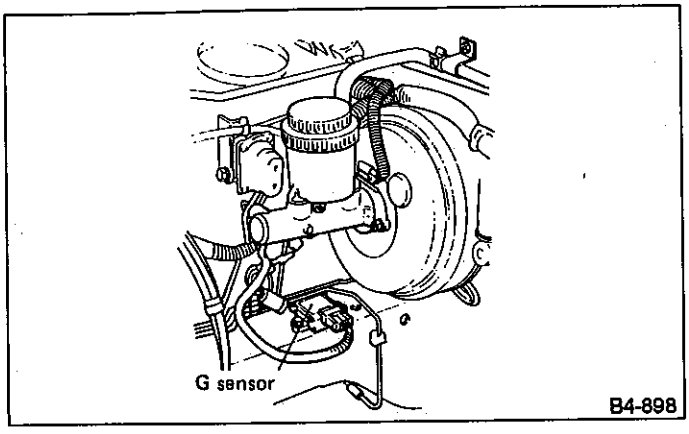

Fig. 172

B: INSPECTION

1) Check to ensure that G sensor is securely installed on front wheel apron, and that connector is properly installed.
2) Disconnect connector from G sensor and measure contact resistance between terminals.

Condition of G sensor	Standard
On flat surface	610± 60 Ω
* When slanting about 14° — 21.3° (θ)	610± 60 Ω → More than 100 kΩ

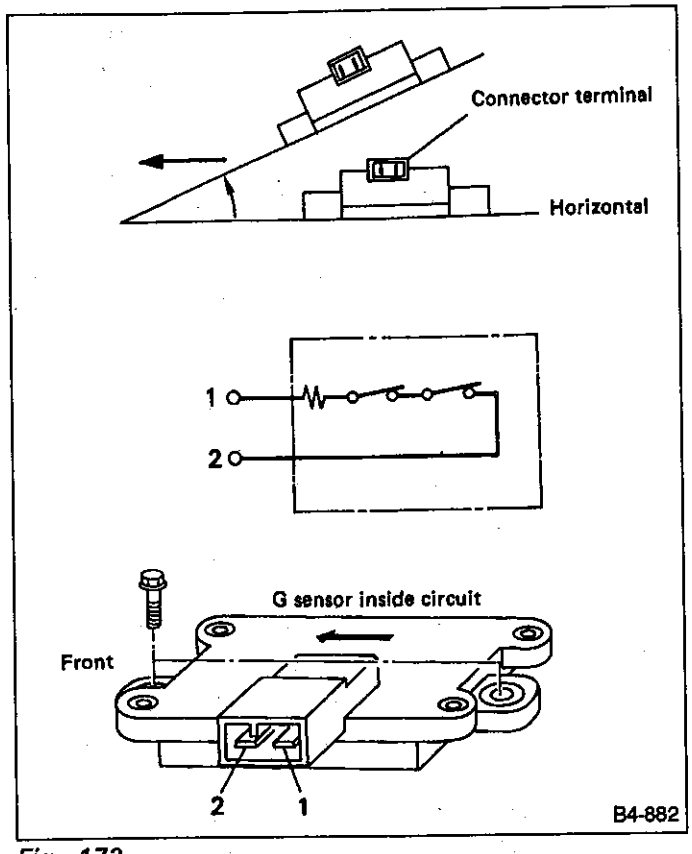

Fig. 173

a. Tilt G sensor forward as shown in Figure 173. If it is tilted backward, it will not operate.
b. Hysteresis occurs during ON-OFF operation of sensor. Sensor should turn OFF from ON (610 Ω → More than 100 kΩ) when it is tilted in a range from 14° to 21.3°.

Tightening torque:
7.2 — 7.6 N•m (0.73 — 0.77 kg-m, 5.3 — 5.6 ft-lb)

18. Brake Hose and Pipe

A: REMOVAL AND INSTALLATION

a. When removing and installing the brake pipe, make sure that it is not bent.
b. After installing the brake pipe and hose, bleed the air.
c. After installing the brake hose, make sure that it does not touch the tire or suspension ASSY, etc.

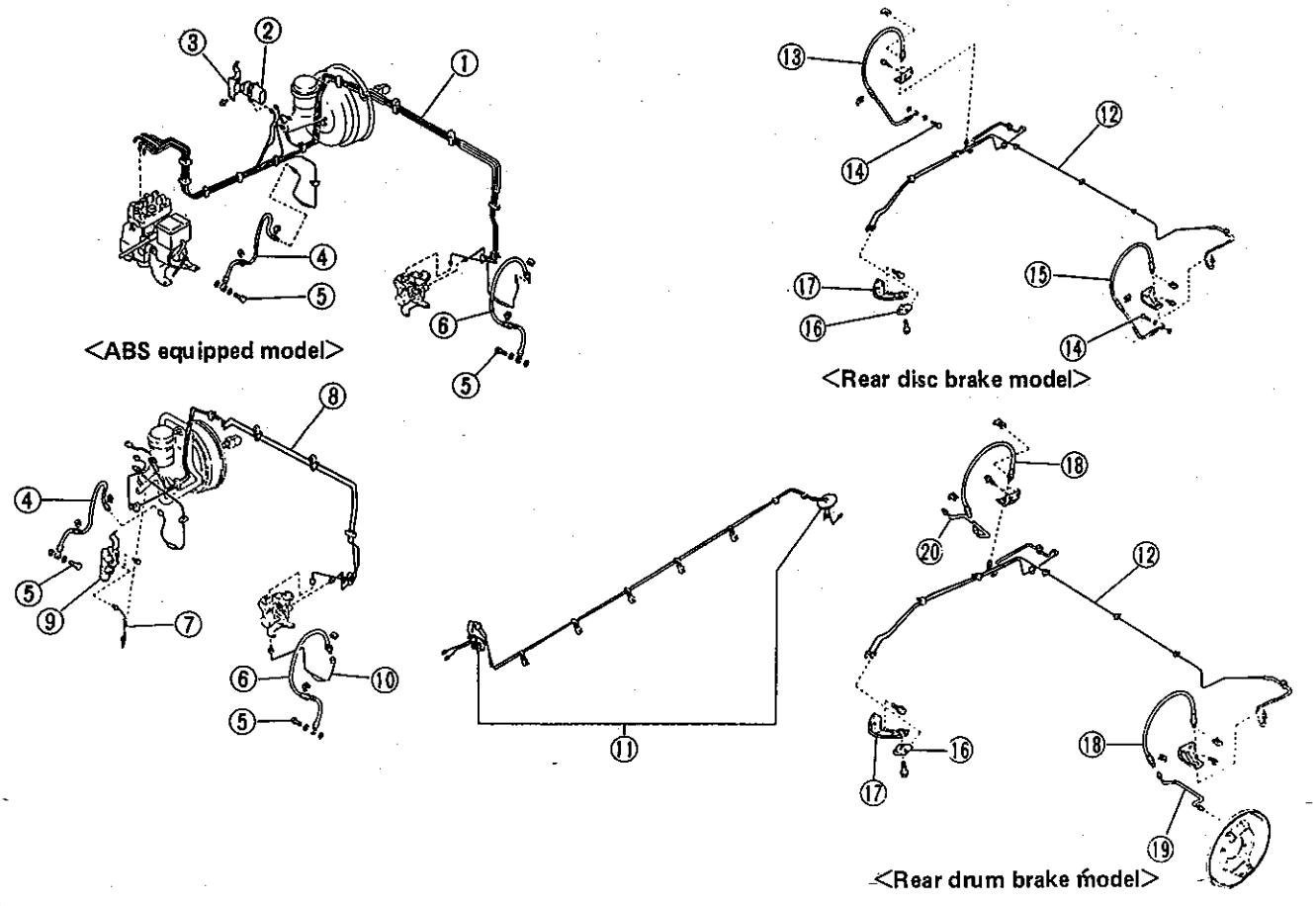

1 Front brake pipe ASSY (ABS equipped model)
2 Proportioning valve (ABS equipped model)
3 Valve bracket (ABS equipped model)
4 Front brake hose RH
5 Union bolt
6 Front brake hose LH
7 Front adapter pipe UPPER
8 Front brake pipe
9 Proportioning valve
10 Front adapter pipe LOWER
11 Center brake pipe ASSY
12 Rear brake pipe ASSY
13 Rear brake hose RH
14 Union bolt
15 Rear brake hose LH
16 Two-way connector
17 Connector bracket
18 Rear brake hose drum
19 Rear brake pipe LH
20 Rear brake pipe RH

Fig. 174

T TROUBLESHOOTING

1. Entire Brake System

Trouble and possible cause	Corrective action
1. Insufficient braking	
(1) Fluid leakage from the hydraulic mechanism	Repair or replace (cup, piston seal, piston boot, master cylinder piston kit, pipe or hose).
(2) Entry of air into the hydraulic mechanism	Bleed the air.
(3) Excessively wide shoe clearance	Adjust the clearance.
(4) Wear, deteriorated surface material, adhering water or fluid on the lining	Replace, grind or clean.
(5) Improper operation of master cylinder, disc caliper, brake booster or check valve	Correct or replace.
2. Unstable or uneven braking	
(1) Fluid on the lining, drum or rotor	Eliminate cause of fluid leakage, clean, or replace.
(2) Drum or rotor eccentricity	Correct or replace the drum or rotor.
(3) Worn brake drum, or damage to the drum caused by sand	Correct by grinding, or replace.
(4) Improper lining contact, deteriorated surface material, improper inferior material, or wear	Correct by grinding, or replace.
(5) Deformed back plate	Correct or replace.
(6) Improper tire inflation	Inflate to correct pressure.
(7) Disordered wheel alignment	Adjust alignment.
(8) Loosened back plate or the support installing bolts	Retighten.
(9) Loosened wheel bearing	Retighten to normal tightening torque or replace.
(10) Trouble in the hydraulic system	Replace the cylinder, brake pipe or hose.
(11) Uneven effect of the parking brake	Check, adjust, or replace the rear brake and cable system.
3. Excessive pedal stroke	
(1) Entry of air into the hydraulic mechanism	Bleed the air.
(2) Excessive play in the master cylinder push rod	Adjust.
(3) Fluid leakage from the hydraulic mechanism	Repair or replace (cup, piston seal, piston boot, master cylinder piston kit, pipe or hose).
(4) Improperly adjusted shoe clearance	Adjust.
(5) Improper lining contact or worn lining	Correct or replace.

Trouble and possible cause	Corrective action
4. Brake dragging or improper brake return	
(1) Insufficient pedal play	Adjust play.
(2) Improper master cylinder return	Clean or replace the cylinder.
(3) Clogged hydraulic system	Replace.
(4) Improper return or adjustment of parking brake	Correct or adjust.
(5) Weakened spring tension or breakage of shoe return spring	Replace the spring.
(6) Excessively narrow shoe clearance	Adjust the clearance.
(7) Improper disc caliper operation	Correct or replace.
(8) Improper adjusted wheel bearing	Adjust or replace.
5. Brake noise (1) (creak sound)	
(1) Hardened or deteriorated lining	Replace the shoe ASSY or pad.
(2) Worn lining	Replace the shoe ASSY or pad.
(3) Loosened back plate or the support installing bolts	Retighten.
(4) Loose wheel bearing	Retighten to normal tightening torque.
(5) Dirty drum or rotor	Clean the drum or rotor, or clean and replace the brake ASSY.
6. Brake noise (2) (hissing sound)	
(1) Worn lining	Replace the shoe ASSY or pad.
(2) Improper installed shoe or pad	Correct or replace the shoe ASSY or pad.
(3) Loose or bent drum or rotor	Retighten or replace.
7. Brake noise (3) (click sound)	
In the case of the disc brake.	
(1) Excessively worn pad or the support	Replace the pad or the support.
In the case of the drum brake.	
(1) Excessively worn shoe ridge	Replace the back plate.
(2) Lack of oil on the shoe ridge surface and anchor	Add more grease.

2. Hill-Holder

Trouble and possible cause	Corrective action
1. Counterforce of clutch pedal is too strong	
(1) PHV cable is damaged or does not operate properly	Repair or replace.
(2) Lever of PHV is defective	Replace entire PHV ASSY.
(3) Clutch system is anomalous	Refer to "Clutch and pedal cable system".
2. Vehicle does not stop on uphill road of 3° or higher inclination	
(1) Front side of vehicle is lowered	Refer to "Suspension".
(2) PHV cable is broken	Replace.
(3) Play of clutch is excessive	Adjust.
(4) PHV cable is elongated	Adjust.
(5) Sealing of PHV is poor	Replace entire PHV ASSY.
3. Shock is felt when starting	
(1) Poor adjustment of starting performance	Adjust.
(2) When depressing the brake pedal strongly:	(The stronger brake pedal depressing force, the later hill holder releasing.)
(3) When starting on flat road after stopping reverse movement:	(Because hill holder is activated.)
4. Vehicle slips down when starting	
(1) PHV cable is elongated	Adjust.
(2) Clutch facing is worn out	Adjust or replace.
(3) Bracket (cable) or stay (PHV) is deformed	Repair or replace.
5. Vehicle cannot start after stoppage	
(1) Return spring is fatigued or broken	Replace.
(2) PHV lever won't return	Replace entire PHV ASSY.
(3) When intentionally depressing brake pedal strongly:	[When the brake pedal is depressed by a force of 1,177 N (120 kg, 265 lb) or more.]
6. Abnormal sound is generated upon releasing brake pedal when stopping	
Rotor and pad matched with each other due to inadequate depressing force to brake pedal	(Abnormal sound is not generated when depressing brake pedal a little stronger.)

Trouble and possible cause	Corrective action
7. Abnormal sound is generated when operating clutch pedal	
(1) Grease is inadequate for the hook of return spring and sliding portion of PHV cable end	Apply grease.
(2) When releasing after maintaining high fluid pressure:	(Flowing sound of fluid when releasing high fluid pressure.)
(3) Clutch system is anomalous	Refer to "Clutch and pedal cable system".

CAUTION:

a. Description in parentheses is a characteristic of hill-holder and does not indicate abnormality. Depressing force required for clutch pedal equipped to hill-holder specifications is 20 to 29 N (2 to 3 kg, 4 to 7 lb) larger than the conventional specifications, which does not constitute abnormality.

b. When vehicle cannot travel (brake cannot be released) because return spring is broken, remove adjust nut, disconnect clutch and PHV, and then return PHV lever to release the brake. (Be sure to apply the parking brake before starting this operation.)

c. The hill-holder may not be activated on a slope of an extremely small inclination.

3. Troubleshooting for ABS

A: BASIC TROUBLESHOOTING PROCEDURE

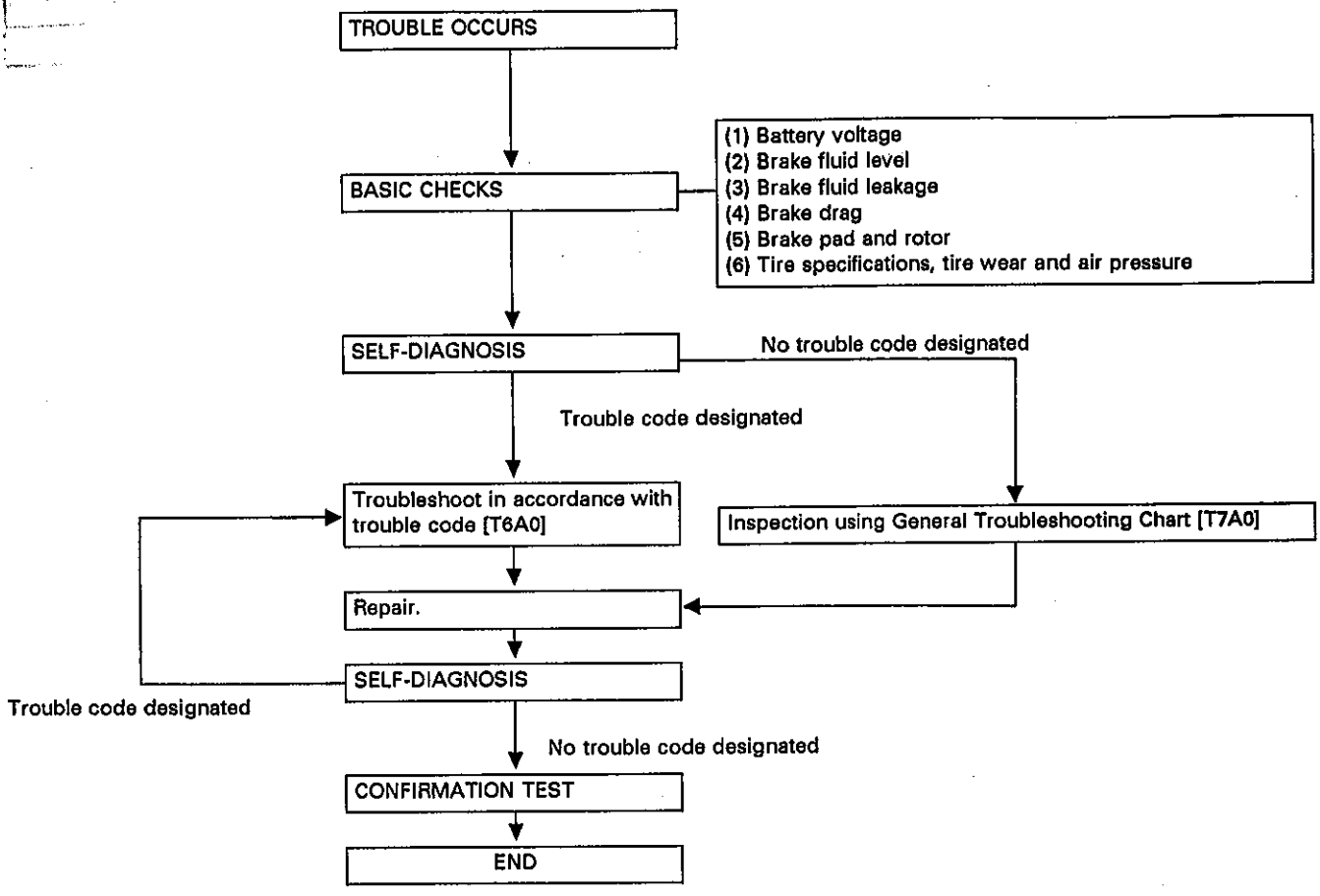

a. To check harness for broken wires or short-circuits, shake it while holding it or the connector.

b. When ABS warning lamp illuminates, read and record trouble code indicated by ECU's LED.

B: SELF-DIAGNOSIS

Conduct self-diagnosis after driving the vehicle at speeds greater than 30 km/h (19 MPH) for at least one minute. The vehicle must be stopped with the engine operating. When a problem is detected by self-diagnosis, the warning light in the instrument panel comes on.
Approximately 5 — 12 seconds after the warning light has come on, the problem detected by the ABS control unit (located under the right front seat) is displayed by a trouble code in terms of "the number of LED's blinks."
a. Both the warning light and the LED remain activated unless the ignition key is turned OFF. With the ignition key turned OFF, the contents of the problem stored in the memory are reset.
b. Only one trouble code is displayed at a time. When a multiple of problems occur, only the first problem detected is displayed.
c. If the LED does not activate (though the warning light is ON), the power supply may be inoperative.

C: LIST OF TROUBLE CODES

1. TROUBLE CODES

Trouble code	Contents of diagnosis	
0 [LED OFF]	Improper power line voltage or faulty harness	
1	Broken or shorted solenoid valve circuit(s) in hydraulic unit	Left front wheel control
2		Right front wheel control
3		Right rear wheel control
4		Left rear wheel control
5	Faulty ABS sensor	Left front wheel speed
6		Right front wheel speed
7		Right rear wheel speed
8		Left rear wheel speed
9	Faulty motor and/or motor relay or broken or shorted harness circuit	
10	Faulty valve relay or broken or shorted harness circuit Faulty valve relay or broken or shorted harness, or interrupted ABS (causing brakes to function as a conventional brake system)	
16	Faulty ABS control unit or G sensor or broken or shorted harness circuit Faulty ABS control unit or G sensor or broken or shorted harness, or malfunctioning system or line unidentified by vehicle speed sensor fail-safe function.	

2. HOW TO READ TROUBLE CODE

The LED in the ABS control unit flashes the code corresponding to the faulty part.

Trouble codes are displayed by the number of LED blinks.

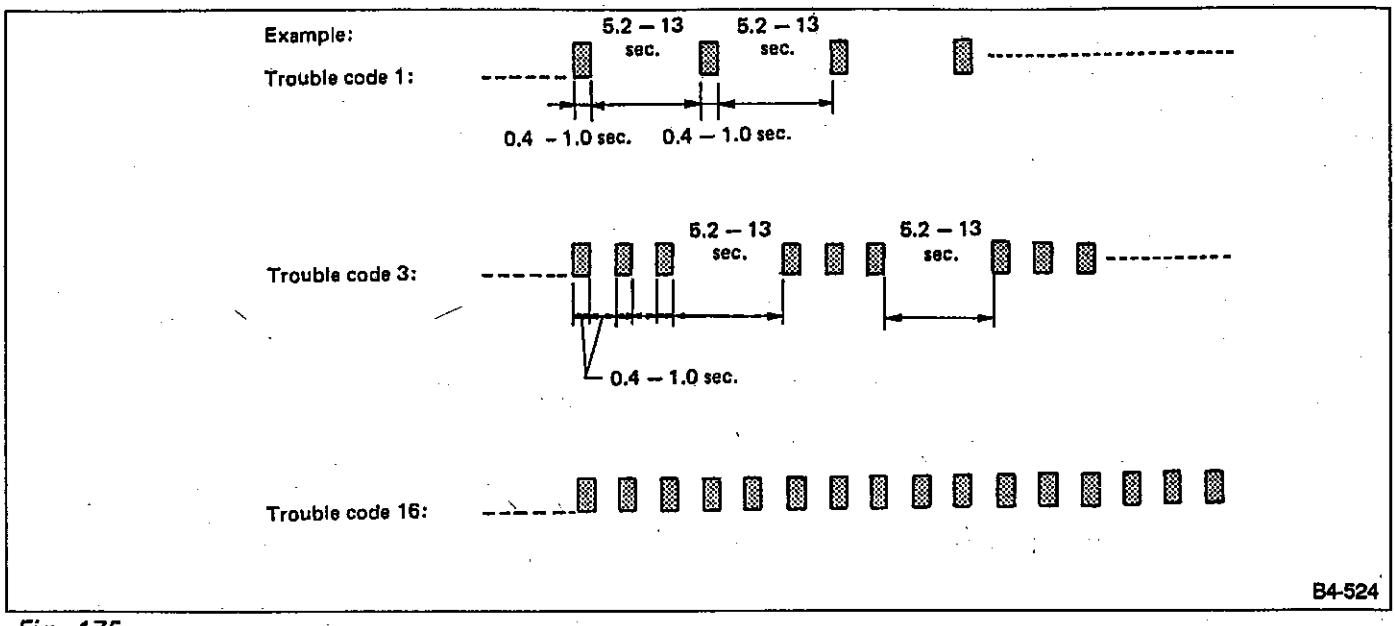

Fig. 175

This page has been intentionally left blank

4. ABS Control Unit I/O Signal

A: I/O SIGNAL VOLTAGE

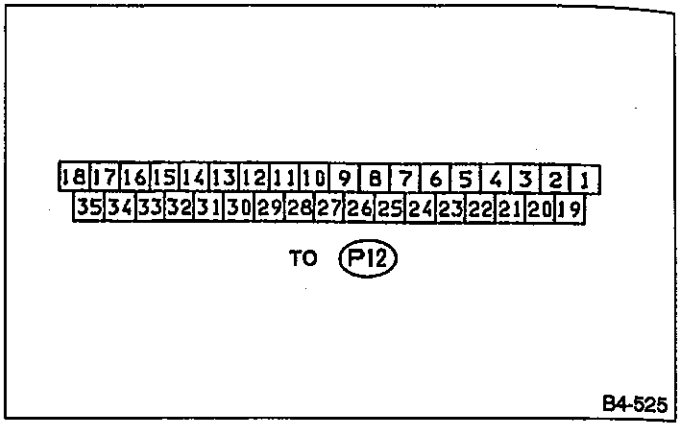

Fig. 176

Contents			Terminal No.	With engine idling	Input/output signals	
					Measured value	Measuring conditions
ABS sensors	Left front wheel		22	0V	200 — 300 mV (AC range)	• No. 22 — No. 4 • Vehicle speed 2.75 km/h (1.7 MPH)
	GND		4			
	Right front wheel		11	0V	200 — 300 mV (AC range)	• No. 11 — No. 21 • Vehicle speed 2.75 km/h (1.7 MPH)
	GND		21			
	Left rear wheel		7	0V	200 — 300 mV (AC range)	• No. 7 — No. 9 • Vehicle speed 2.75 km/h (1.7 MPH)
	GND		9			
	Right rear wheel		24	0V	200 — 300 mV (AC range)	• No. 24 — No. 26 • Vehicle speed 2.75 km/h (1.7 MPH)
	GND		26			
G sensor			16	13 — 14V	0V	
Stop light switch			25	0V	13 — 14V	When brake pedal is depressed.
Motor monitoring			14	0V	13 — 14V	When motor operates.
Valve power-supply monitoring			32	13 — 14V	13 — 14V	—
Hydraulic unit	Solenoid	Left front wheel	2	13 — 14V	0V	When solenoid is energized to produce output.
		Right front wheel	35	13 — 14V	0V	
		Left rear wheel	18	13 — 14V	0V	
		Right rear wheel	19	13 — 14V	0V	
	Valve relay coil		27	0V	0V	—
	Motor relay coil		28	13 — 14V	0V	When motor operates to produce output
Warning light			29	0V	13 — 14V	Ignition switch ON (Engine OFF)
Power supply	Alternator		15	13 — 14V	1.7V	Ignition switch ON (Engine OFF)
	Battery		1	13 — 14V	13 — 14V	—
	Relay coil (valve, motor, etc.)		17	13 — 14V	13 — 14V	—
Grounding line			10	0V	0V	—
			20	0V	0V	—
			34	0V	0V	—

B: I/O SIGNAL DIAGRAM

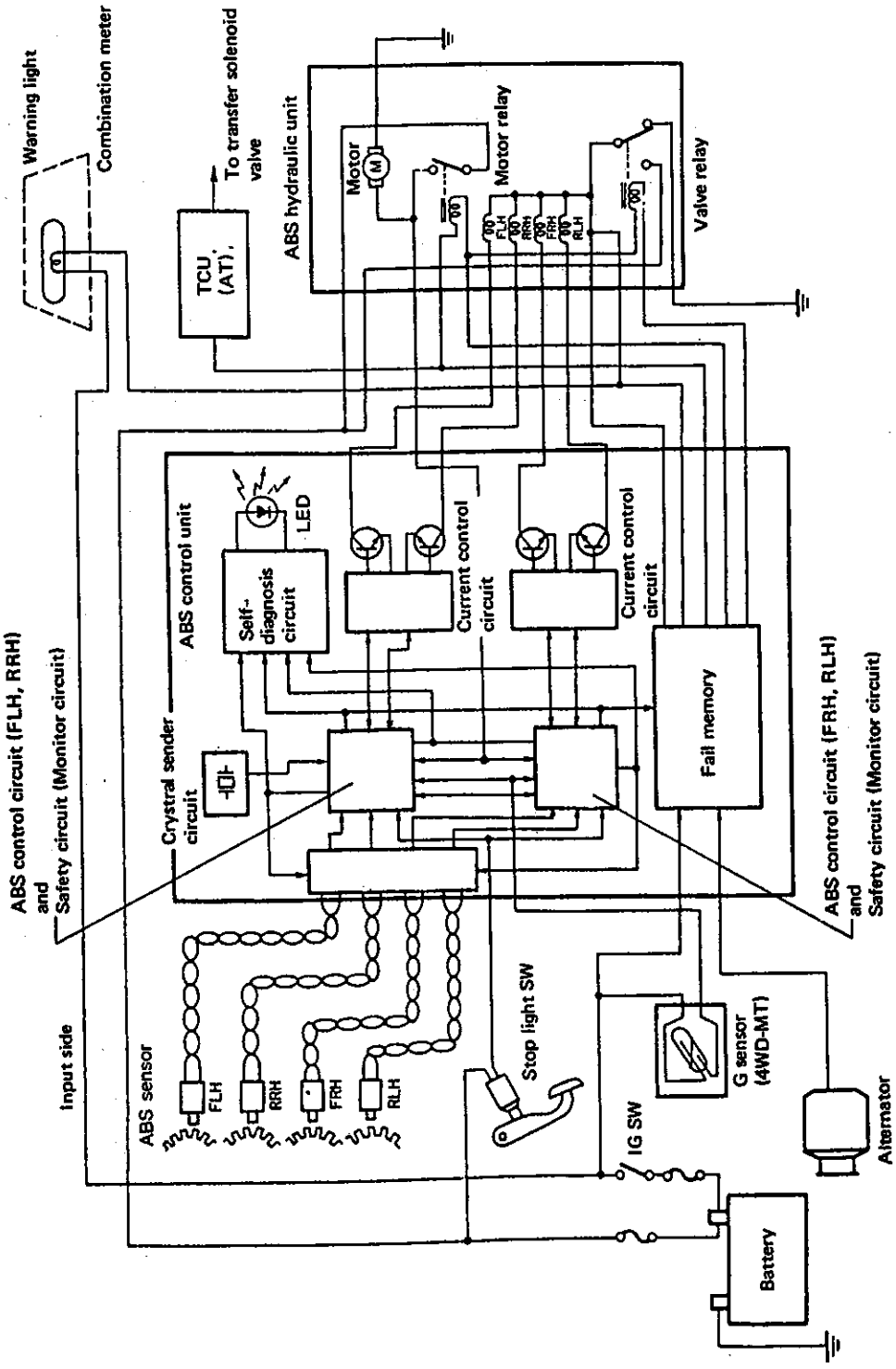

Fig. 177

5. Diagram of ABS

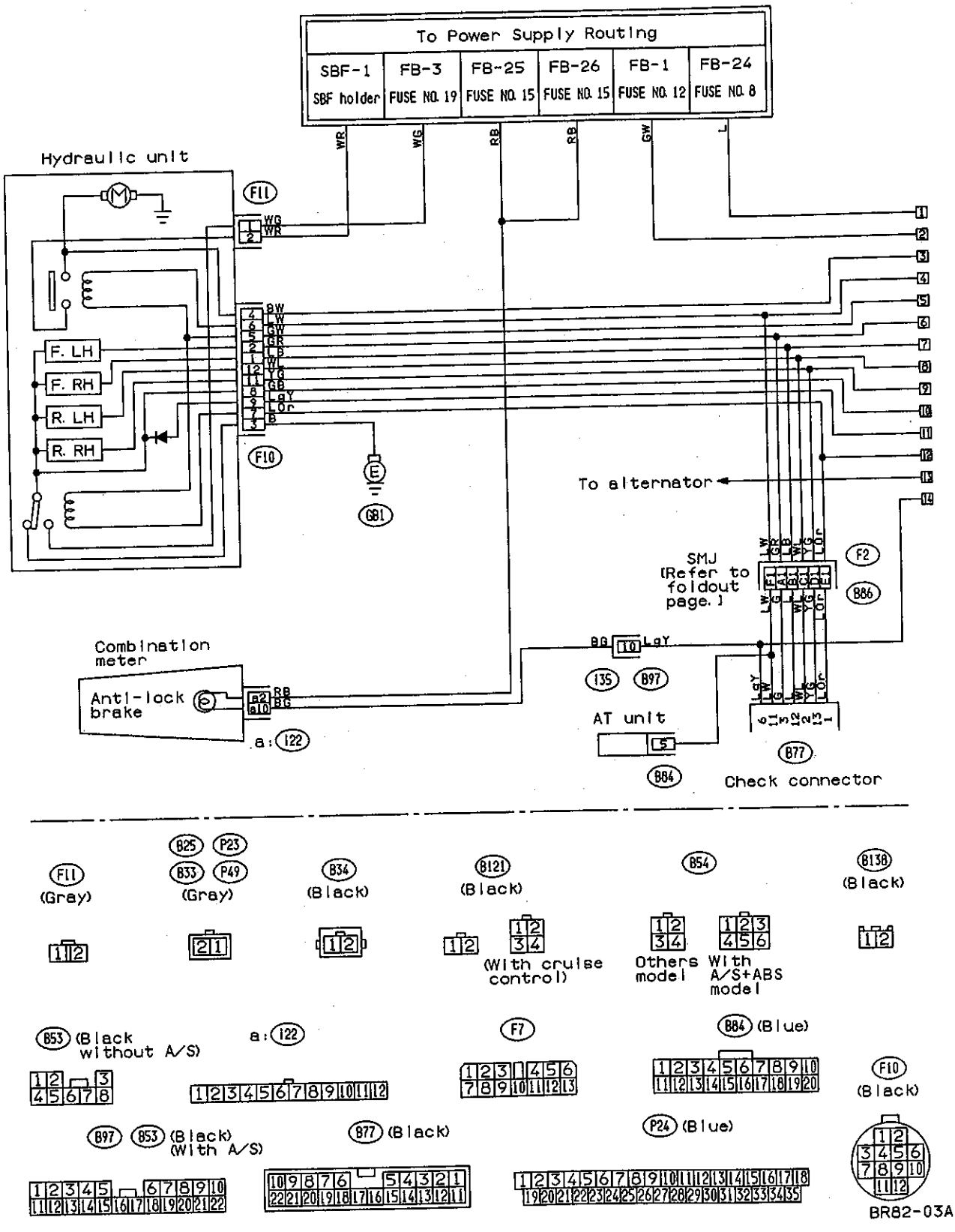

Fig. 178

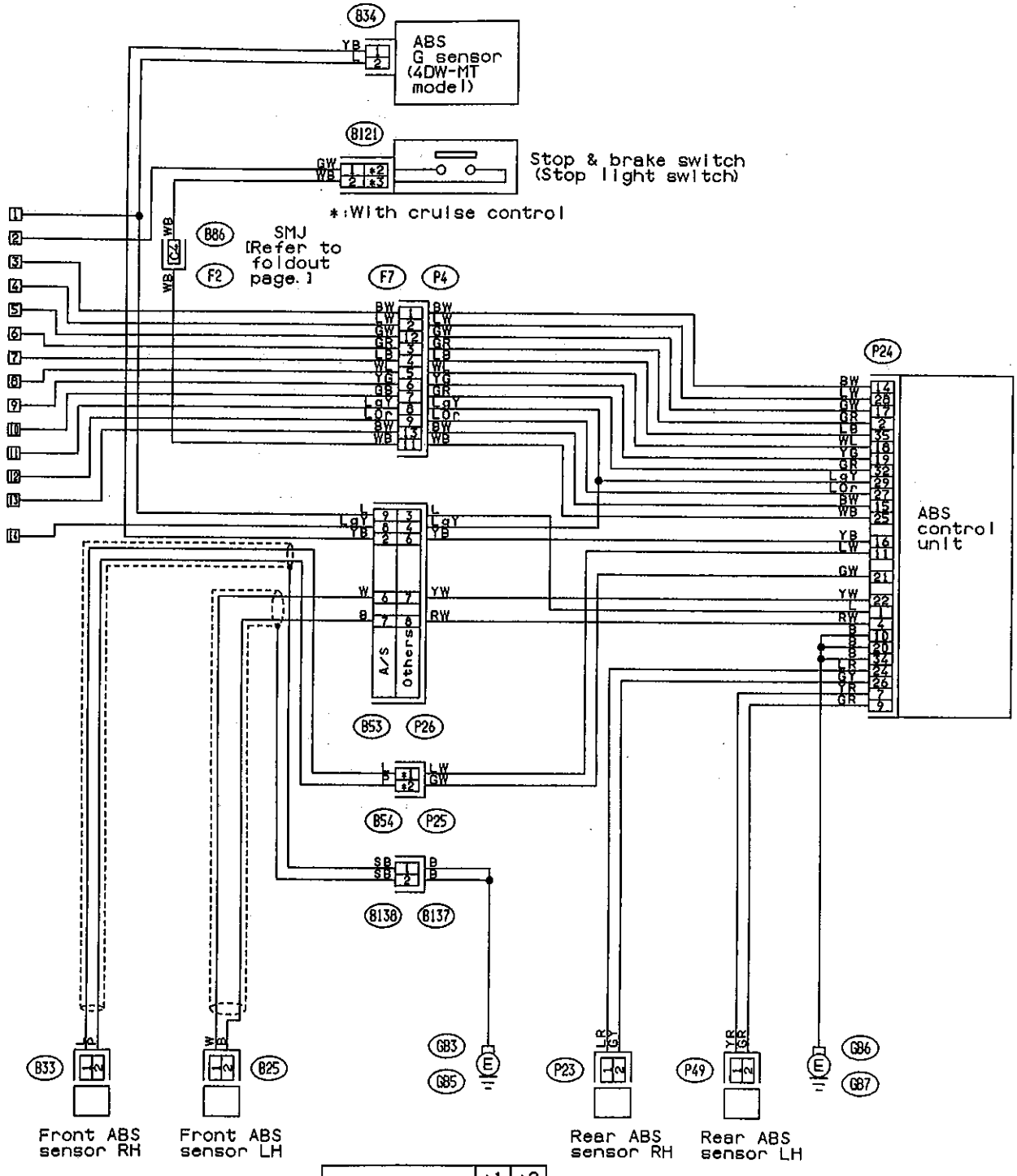

	*1	*2
With A/S+ABS model	2	6
Others model	1	4

BR82-03B

6. Troubleshooting Chart with Trouble Code

A: TROUBLE CODE (0) — Improper power line voltage or faulty harness

CONTENTS OF DIAGNOSIS:
- Faulty ABS control unit
- Faulty harness
- Faulty alternator

TROUBLE SYMPTOM:
- Warning light comes on but ABS control unit LED does not.
- Normal ABS function resumes although ignition switch remains ON.

1. Check power supply (voltage) to ABS control unit. — Not OK → Repair harness/connector.
   OK ↓
2. Check input voltage of ABS control unit to alternator. — Not OK → Repair harness/connector or alternator.
   OK ↓
3. Check ABS control unit ground line (body metal). — Not OK → Repair ground harness.
   OK ↓

Replace ABS control unit.

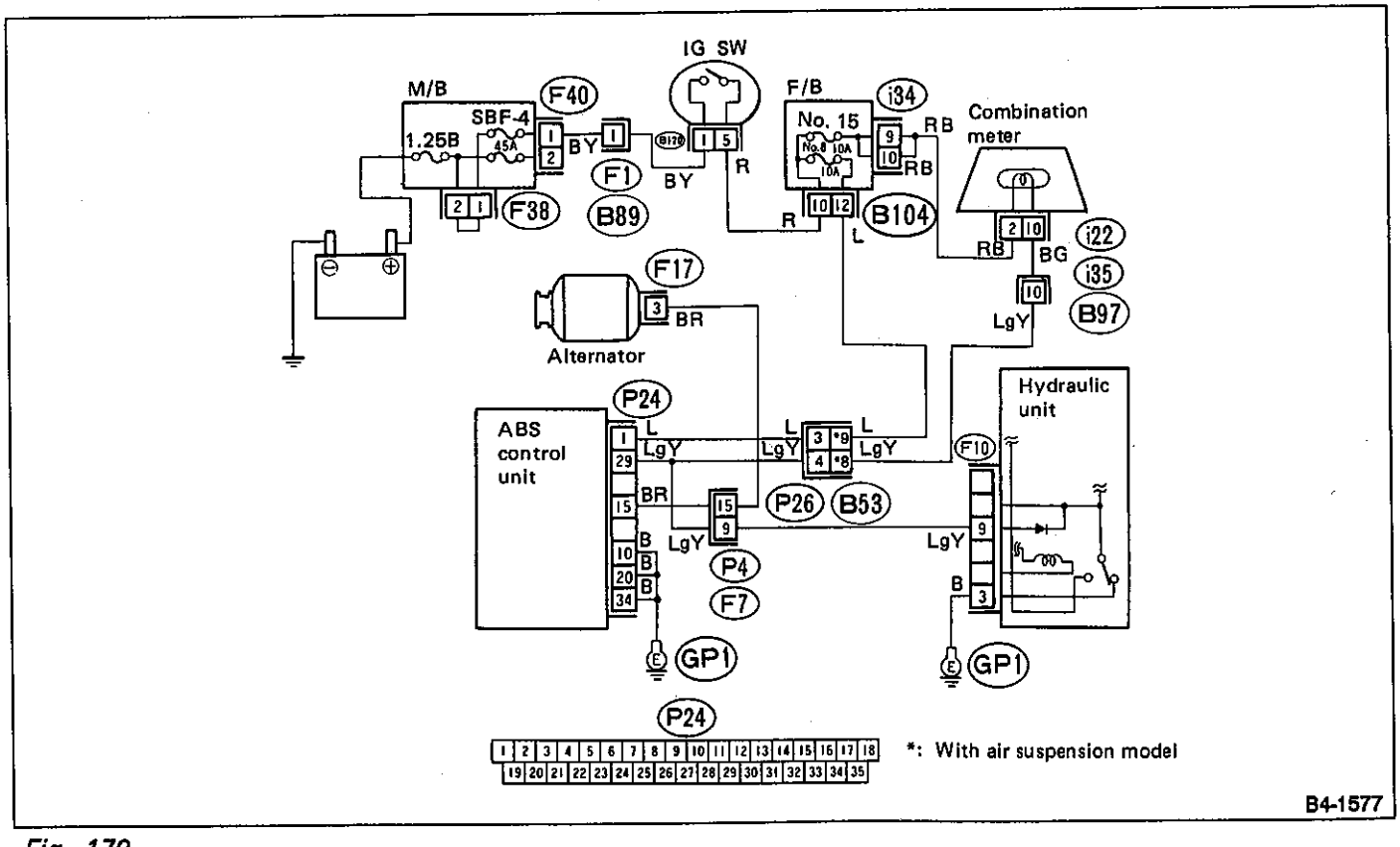

Fig. 179

1. CHECK POWER SUPPLY (VOLTAGE) TO ABS CONTROL UNIT

1) Turn ignition switch OFF.
2) Disconnect connector from ABS control unit.
3) Disassemble connector.
a) While pushing portion ① , disconnect connector.
b) Remove screw from portion ② .
c) Move rubber boot ③ back (toward harness).
d) Slide cover ④ in direction shown by arrow and remove.

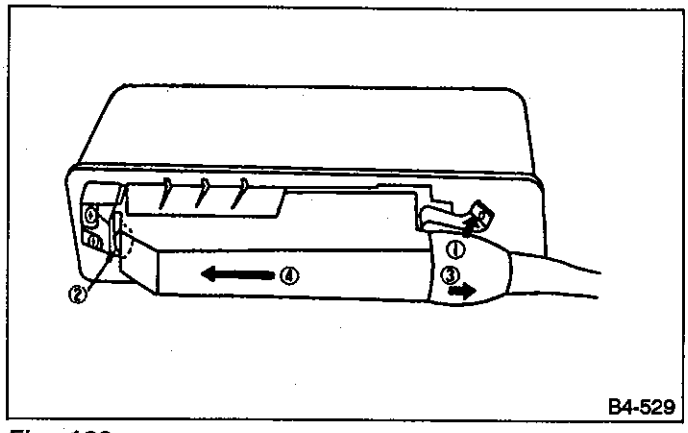

Fig. 180

4) Turn ignition switch ON.
5) Measure voltage between ABS control unit connector and body.

Connector & terminal / Specified Voltage:
(P24) No. 1 — Body / 10 — 12 V

2. CHECK INPUT VOLTAGE OF ABS CONTROL UNIT TO ALTERNATOR

1) Start the engine.
2) Measure voltage between ABS control unit connector and body.

Connector & terminal / Specified Voltage:
(P24) No. 15 — Body / Approx. 13.5 V

3. CHECK ABS CONTROL UNIT GROUND SYSTEM

1) Turn ignition switch OFF.
2) Connect connector to ABS control unit.
3) Turn ignition switch ON.
4) Measure voltage between ABS control unit terminal and body.

Terminal / Specified Voltage:
(P24) No. 20 — Body / 0 V

B: TROUBLE CODE (1 — 4) — Faulty solenoid valve circuit(s) in hydraulic unit

CONTENTS OF DIAGNOSIS:
- Faulty harness/connector in hydraulic unit
- Faulty solenoid valve in hydraulic unit

TROUBLE SYMPTOM:
- ABS does not operate.

1	Check hydraulic unit solenoid.	Not OK →	Replace hydraulic unit.
	OK ↓		
2	Check signal emitted from solenoid (on ABS control unit side).	Not OK →	Repair harness/connector between ABS control unit and hydraulic unit.
	OK ↓		
	Replace ABS control unit.		

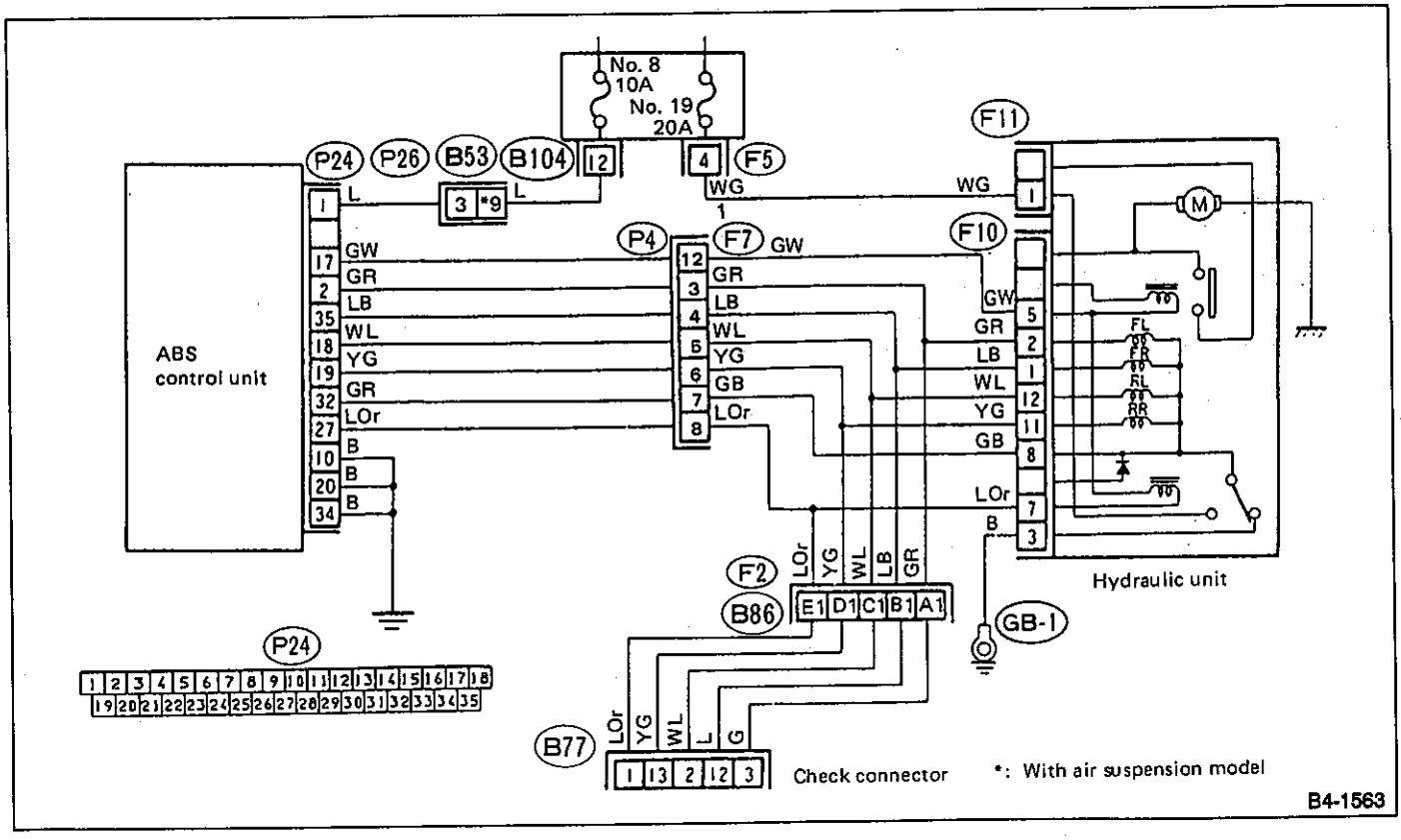

Fig. 181

1. CHECK HYDRAULIC UNIT SOLENOID

1) Turn ignition switch ON.
2) Ground check-connector terminal, and check solenoid valve for operation (sound which indicates proper operation).

Each time solenoid activates, system circuit is interrupted. To check again, first turn ignition switch OFF and then ON.

TROUBLE CODE / Connector & Terminal:
1 / (B77) No. 3 — Body
2 / (B77) No. 12 — Body
3 / (B77) No. 13 — Body
4 / (B77) No. 2 — Body

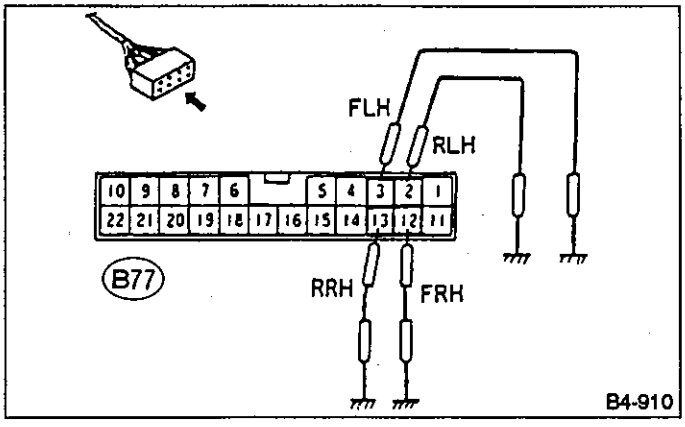

Fig. 182

2. CHECK SOLENOID (ON ABS CONTROL UNIT SIDE)

1) Turn ignition switch ON.
2) Attach circuit tester's positive probe to terminal (corresponding with solenoid) and ground probe to ground and measure voltage between terminal and ground.

Each time solenoid activates, system circuit is interrupted. To check again, first turn ignition switch OFF and then ON.

TROUBLE CODE / Connector & Terminal:
1 / (P24) No. 2 — Body
2 / (P24) No. 35 — Body
3 / (P24) No. 19 — Body
4 / (P24) No. 18 — Body
Specified Voltage: 0 V (solenoid in operation)

C: TROUBLE CODE (5 and 6) — Faulty front ABS sensor

CONTENTS OF DIAGNOSIS:
- Faulty front ABS sensor or harness
- Faulty ABS control unit

TROUBLE SYMPTOM:
- ABS does not operate.

1	Check signal emitted from sensor (on ABS control unit side).	OK →	Replace ABS control unit.
	↓ Not OK		
2	Check sensor.	OK →	Repair harness/connector.
	↓ Not OK		
	Replace sensor.		

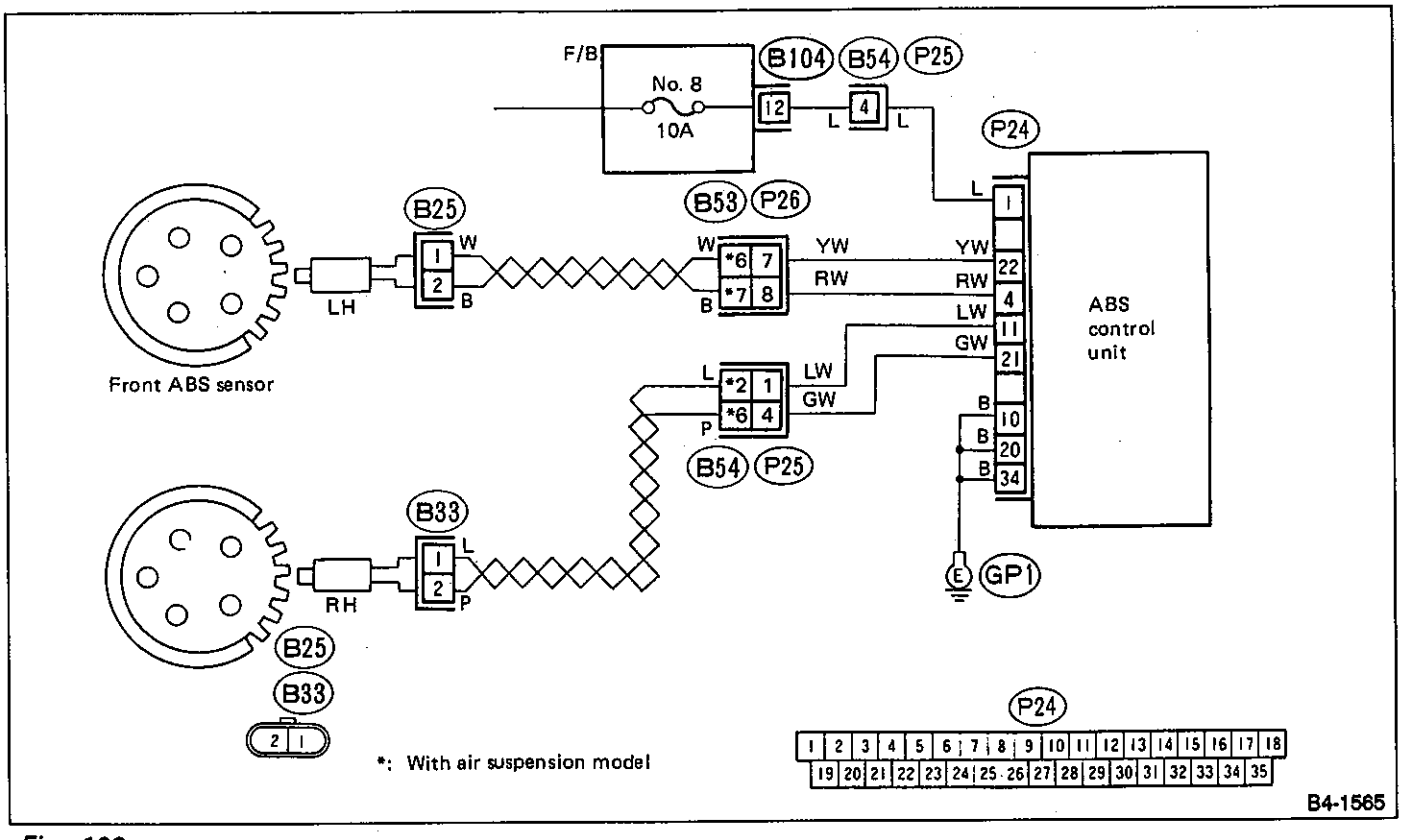

Fig. 183

1. CHECK SIGNAL EMITTED FROM SENSOR (ON ABS CONTROL UNIT SIDE)

1) Disconnect connector from ABS control unit. ⟨Refer to No. T6A1⟩
2) Raise all four wheels off ground.
3) Measure voltage between ABS control unit terminals using a digital circuit tester (set in "AC" range) according to trouble code.

TROUBLE CODE / Connector & Terminal:
5 / (P24) No. 4 — No. 22
6 / (P24) No. 11 — No. 21
Specified Voltage:
200 — 300 mV (at "creep" speed of AT model)

4) Disconnect ABS control unit connector, and measure resistance between sensor and body.

Connector & terminal / Specified Resistance:
(P24) No. 22 — Body / 1 MΩ min.
(P24) No. 21 — Body / 1 MΩ min.

2. CHECK SENSOR

1) Disconnect sensor connector.
2) Measure resistance between sensor terminals.

TROUBLE CODE / Connector & Terminal:
5 / Sensor LH No. 1 — No. 2
6 / Sensor RH No. 1 — No. 2
Specified Resistance: 0.8 — 1.3 kΩ

3) Measure resistance between sensor connector terminal and body.

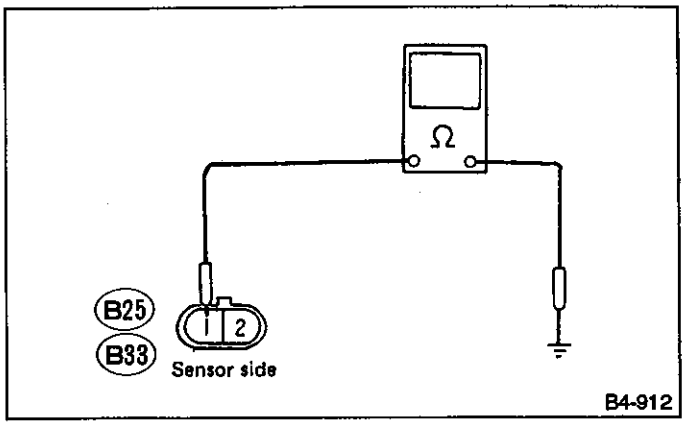

Fig. 184

Connector & terminal / Specified Resistance:
(B25) No. 1 — Body / 1 MΩ min.
(B33) No. 1 — Body / 1 MΩ min.

D: TROUBLE CODE (7 and 8) — Faulty rear ABS sensor

CONTENTS OF DIAGNOSIS:
- Faulty rear ABS sensor or harness
- Faulty ABS control unit

TROUBLE SYMPTOMS:
- ABS does not operate.
- Rear wheels only are occasionally controlled by ABS.

1. Check signal emitted from sensor (on ABS control unit side).
   - OK → Replace ABS control unit.
   - Not OK ↓
2. Check sensor.
   - OK → Repair harness/connector.
   - Not OK ↓

Faulty sensor

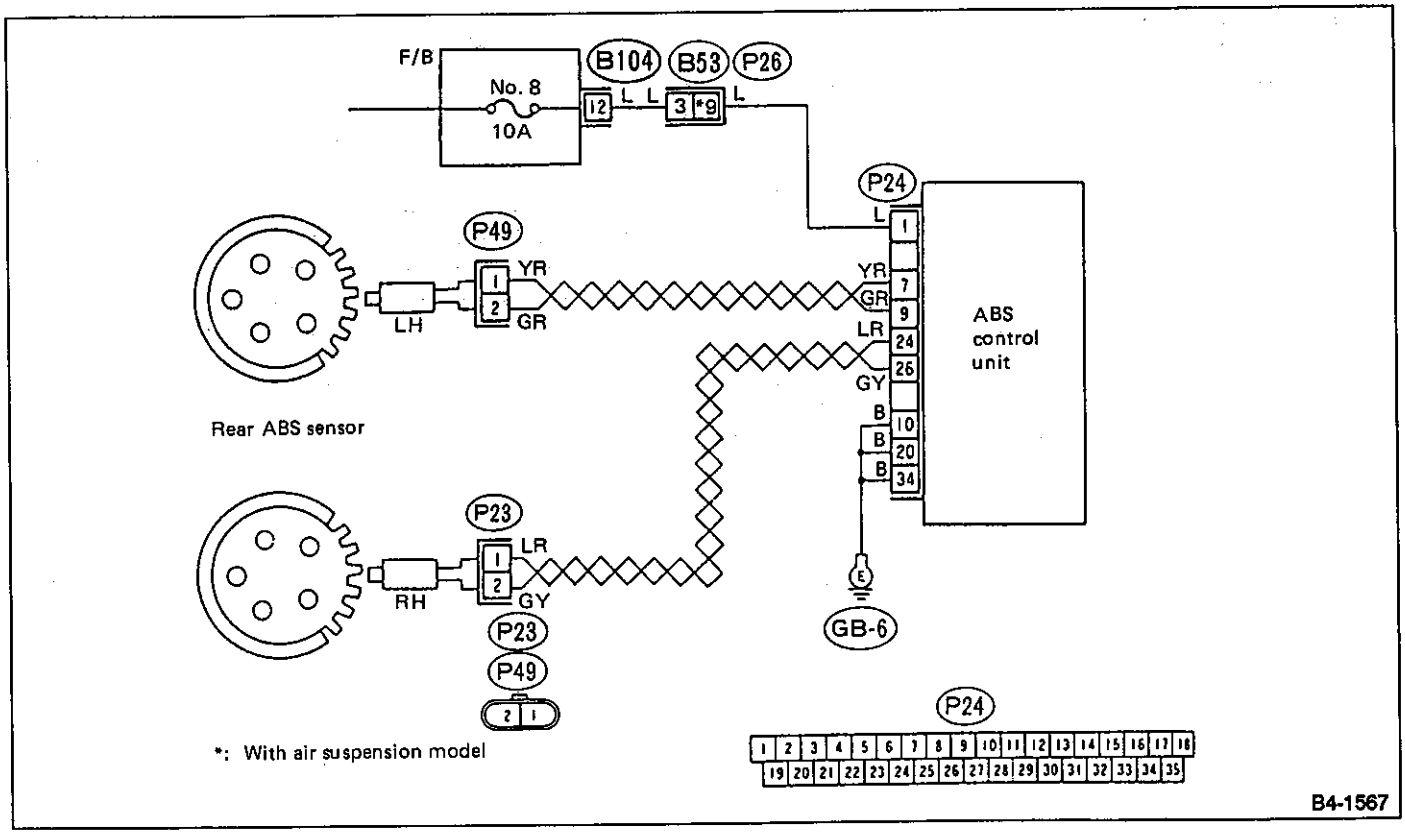

Fig. 185

1. CHECK INPUT SIGNAL OF SENSOR TO ABS CONTROL UNIT

1) Disconnect connector from ABS control unit. (Refer to No. T6A1)
2) Raise wheels off ground.
3) Measure voltage between ABS control unit terminals using a digital circuit tester, (Set in "AC" range) according to trouble code.

TROUBLE CODE / Connector & Terminal:
7 / (P24) No. 24 — No. 26
8 / (P24) No. 7 — No. 9
Specified Voltage:
200 — 300 mV (at "creep" speed of AT model)

4) Disconnect ABS control unit connector and measure resistance between sensor and body.

Connector & Terminal / Specified Resistance:
(P24) No. 26 — Body / 1 MΩ min.
(P24) No. 9 — Body / 1 MΩ min.

2. CHECK SENSOR

1) Disconnect sensor connector.
2) Measure resistance between sensor terminals.

TROUBLE CODE / Connector & Terminal:
7 / Sensor RH No. 1 — No. 2
8 / Sensor LH No. 1 — No. 2
Specified Voltage: 0.8 — 1.3 kΩ

3) Measure resistance between sensor connector terminal and body.

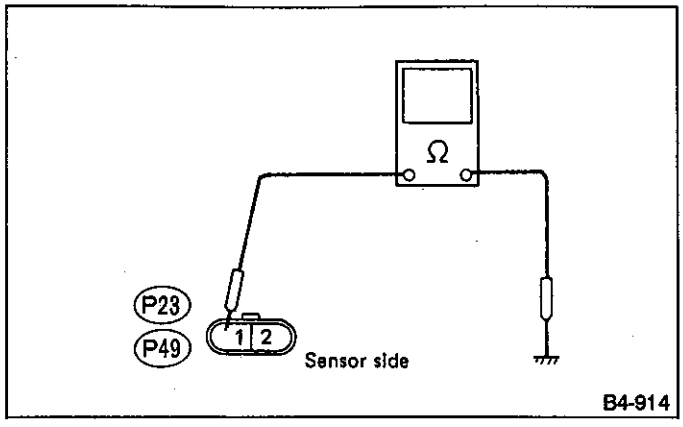

Fig. 186

Connector & Terminal / Specified Resistance:
(P23) No. 1 — Body / 1 MΩ min.
(P49) No. 1 — Body / 1 MΩ min.

E: TROUBLE CODE (9) — Faulty hydraulic motor or motor relay

CONTENTS OF DIAGNOSIS:
- Faulty main power supply
- Faulty hydraulic motor or motor relay built into hydraulic unit

TROUBLE SYMPTOM:
- ABS does not operate.

1. Check motor relay coil (on ABS control unit side).
   - Not OK → 4. Check relay coil (on hydraulic unit side).
   - OK ↓
2. Check motor relay contacts (on hydraulic unit side).
   - OK → 5. Check and repair motor power line harness.
   - Not OK ↓
3. Check motor relay.
   - Not OK → Replace motor relay.
   - OK ↓

Replace hydraulic unit.

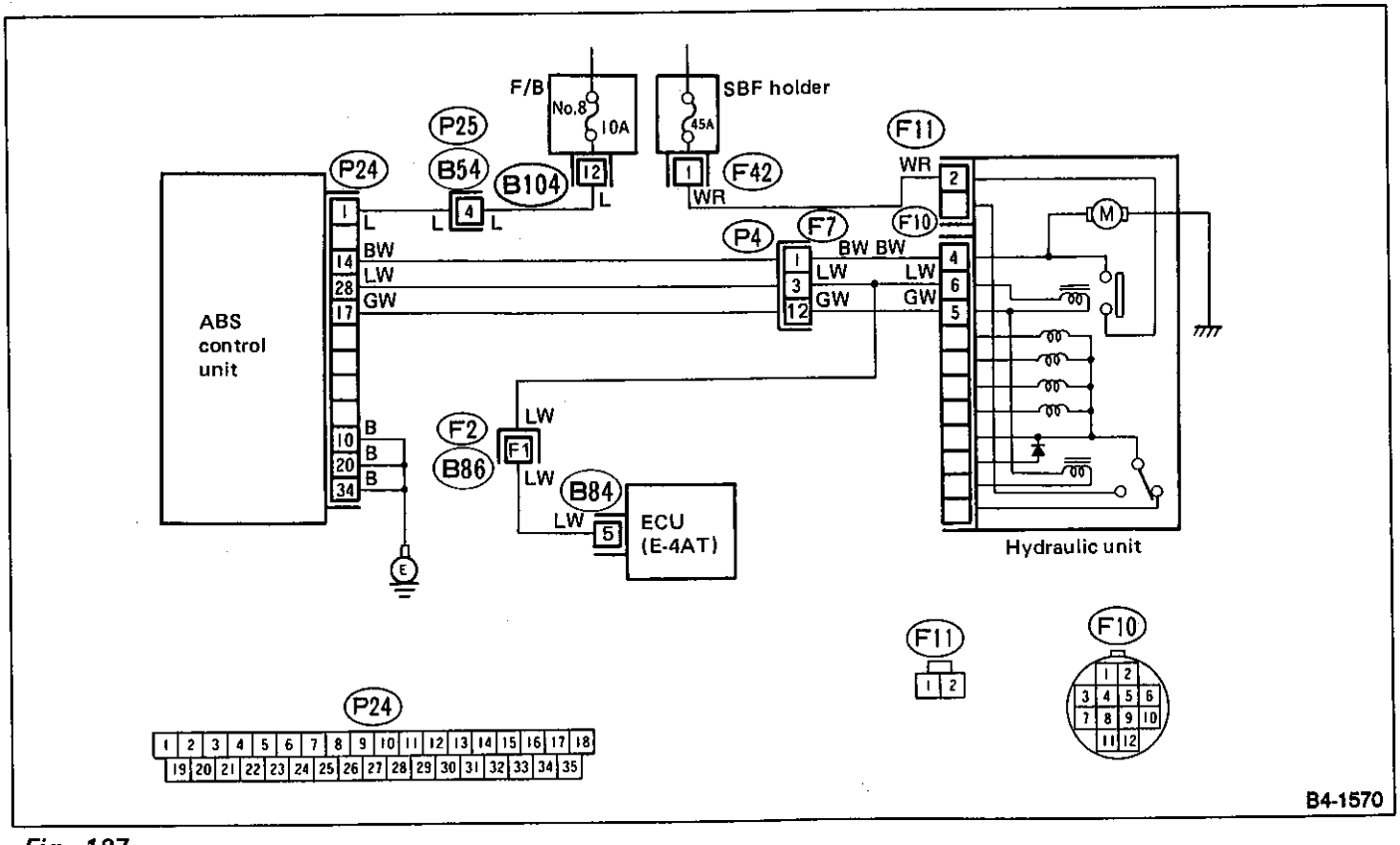

Fig. 187

1. CHECK RELAY COIL (ON ABS CONTROL UNIT SIDE)

1) Turn ignition switch OFF.
2) Disconnect ABS control unit connector.
3) Disassemble ABS control unit connector.
4) Measure resistance between ABS control unit terminals.

Connector & terminal / Specified Resistance:
(P22) No. 17 — No. 28 / 45 — 55 Ω

2. CHECK MOTOR RELAY CONTACTS (ON HYDRAULIC UNIT SIDE)

1) Disconnect connectors from hydraulic unit.
2) Measure resistance between hydraulic unit terminals.

Terminal / Specified Resistance:
(To F11) No. 2 — (To F10) No. 4 / 1 MΩ min.

3. CHECK MOTOR RELAY

1) Remove motor relay.
2) Attach circuit tester probes to terminals, as shown in Figure.

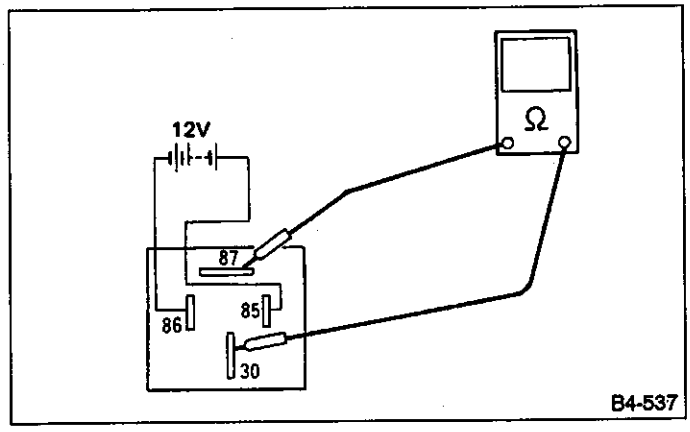

Fig. 188

3) Measure resistance between terminals.

Terminal / Specified Resistance:
No. 30 — 87 / 0 Ω(when 12 volts applied)
No. 30 — 87 / 1 MΩ min. (when no voltage is applied)

4. CHECK RELAY COIL (ON HYDRAULIC UNIT SIDE)

1) Disconnect connector from hydraulic unit.
2) Measure resistance between hydraulic unit terminals.

Terminal / Specified Resistance:
No. 5 — No. 6 / 45 — 55 Ω

When resistance checks out "Not OK", check relay as a single unit.
- **If resistance checks out "OK", replace hydraulic unit.**
- **If "Not OK", repair harness connector between ABS control unit and hydraulic unit.**

3) Disconnect connectors from ABS control unit and hydraulic unit. Measure resistance between connectors, and between each connector and body.

Connector & terminal / Specified Resistance:
(F10) No. 6 — (P24) No. 28 / 0 Ω
(F10) No. 5 — (P24) No. 17 / 0 Ω
(F10) No. 6 — Body / 1 MΩ min
(F10) No. 4 — Body / 1 MΩ min

5. CHECK AND REPAIR MOTOR POWER HARNESS

1) Turn ignition switch ON.
2) Measure voltage between hydraulic unit connector and body.

Connector & terminal / Specified Voltage:
(F11) No. 2 — Body / 10 — 12 V

F: TROUBLE CODE (10) — Faulty valve relay or interrupted system operation (caused by symptoms other than those indicated at left.)

CONTENTS OF DIAGNOSIS:
- Faulty main power supply
- Faulty hydraulic unit valve relay
- Interference with other system

TROUBLE SYMPTOM:
- ABS does not operate.

1. Check valve relay (on ABS control unit side).
   - Not OK → 4. Check valve relay coil (on hydraulic unit side).
   - OK ↓
2. Check hydraulic unit valve relay.
   - OK → 5. Check and repair valve power harness. → 6. Troubleshoot in accordance with trouble codes 1 through 16.
   - Not OK ↓
3. Check valve relay.
   - Not OK → Replace relay.
   - OK ↓
Replace hydraulic unit.

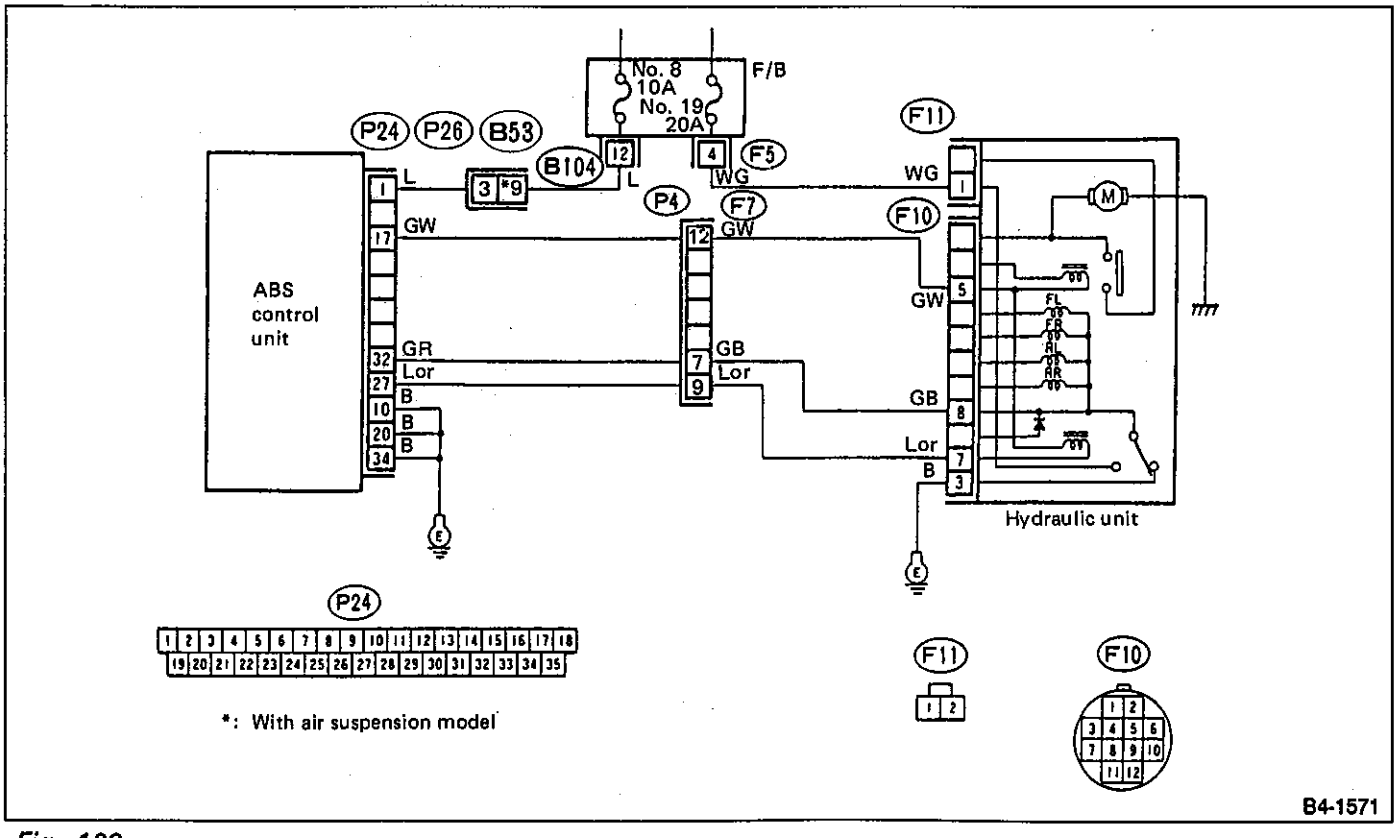

Fig. 189

1. CHECK VALVE RELAY COIL (ON ABS CONTROL UNIT SIDE)

1) Turn ignition switch OFF.
2) Disconnect ABS control unit connector.
3) Disassemble connector. ⟨Refer to No. T6A1⟩
4) Measure resistance between ABS control unit terminals.

Connector & terminal / Specified Resistance:
(P24) No. 17 — No. 27 / 80 — 90 Ω

2. CHECK HYDRAULIC UNIT VALVE RELAY

1) Disconnect connector from hydraulic unit.
2) Measure resistance between hydraulic unit terminals.

Terminal / Specified Resistance:
(To F11) No. 1 — (To F10) No. 8 / 1 MΩ min.

3. CHECK VALVE RELAY AS A SINGLE UNIT

1) Remove valve relay.
2) Attach circuit tester probes to terminals, as shown in Figure.

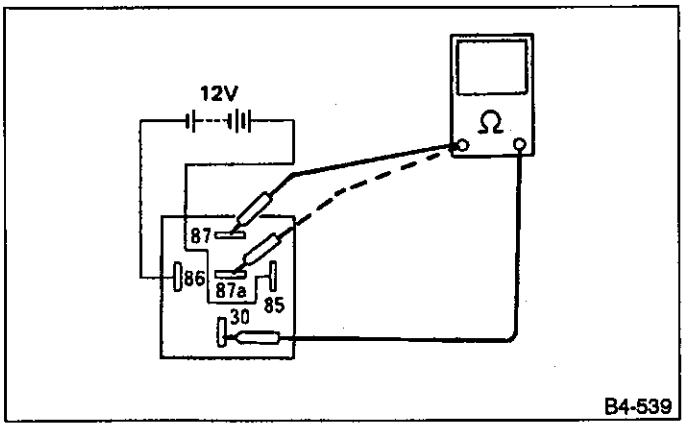

Fig. 190

3) Measure resistance between respective terminals.

Terminal / Specified Resistance:
No. 87 — 30 / 0 Ω (when 12 volts applied)
No. 87 — 30 / 1 MΩ (when no voltage is applied)
No. 87a — 30 / 1 MΩ (when 12 volts applied)
No. 87a — 30 / 0 Ω (when no voltage is applied)

4. CHECK HYDRAULIC UNIT VALVE RELAY COIL

1) Disconnect connector from hydraulic unit.
2) Measure resistance between hydraulic unit terminals.

Terminal / Specified Resistance:
(To F10) No. 5 — No. 7 / 80 — 90 Ω

When resistance checks out "Not OK", check relay as a single unit.

w3) Disconnect connectors from ABS control unit and hydraulic unit. Measure resistance between connectors.

Connector & terminal / Specified Resistance:
(F10) No. 5 — (P12) No. 17 / 0 Ω
(F10) No. 7 — (P12) No. 27 / 0 Ω
(F10) No. 5 — Body / 1 MΩ min.
(F10) No. 7 — Body / 1 MΩ min.

If resistance checks out "OK", replace hydraulic unit; if "Not OK", repair harness/connector between ABS control unit and hydraulic unit.

5. CHECK AND REPAIR POWER HARNESS

1) Turn ignition switch ON.
2) Measure resistance between hydraulic unit connector and body.

Connector & terminal / Specified Voltage:
(F11) No. 1 / 10 — 12 V

G: TROUBLE CODE (16) — Faulty ABS control unit or G sensor (4WD, MT model)

CONTENTS OF DIAGNOSIS:
- Faulty ABS control unit
- Faulty power supply to ABS control unit or faulty ground system
- Faulty G sensor
- Faulty G-sensor harness and connector

TROUBLE SYMPTOMS:
- ABS control unit does not operate.
- ABS activates faster than specifications when braking on high "μ" (dry asphalt) road.
- Warning light comes on and trouble code "16" is displayed approximately 20 seconds after vehicle starts.

1 Check continuity in G-sensor circuit (on ABS control unit side).
- OK → Faulty ABS control unit. (Replace after inspection of power supply.)
- Not OK ↓

2 Check G sensor.
- OK → 3 Check harness between ABS control unit and G sensor.
- Not OK ↓

Replace G sensor.

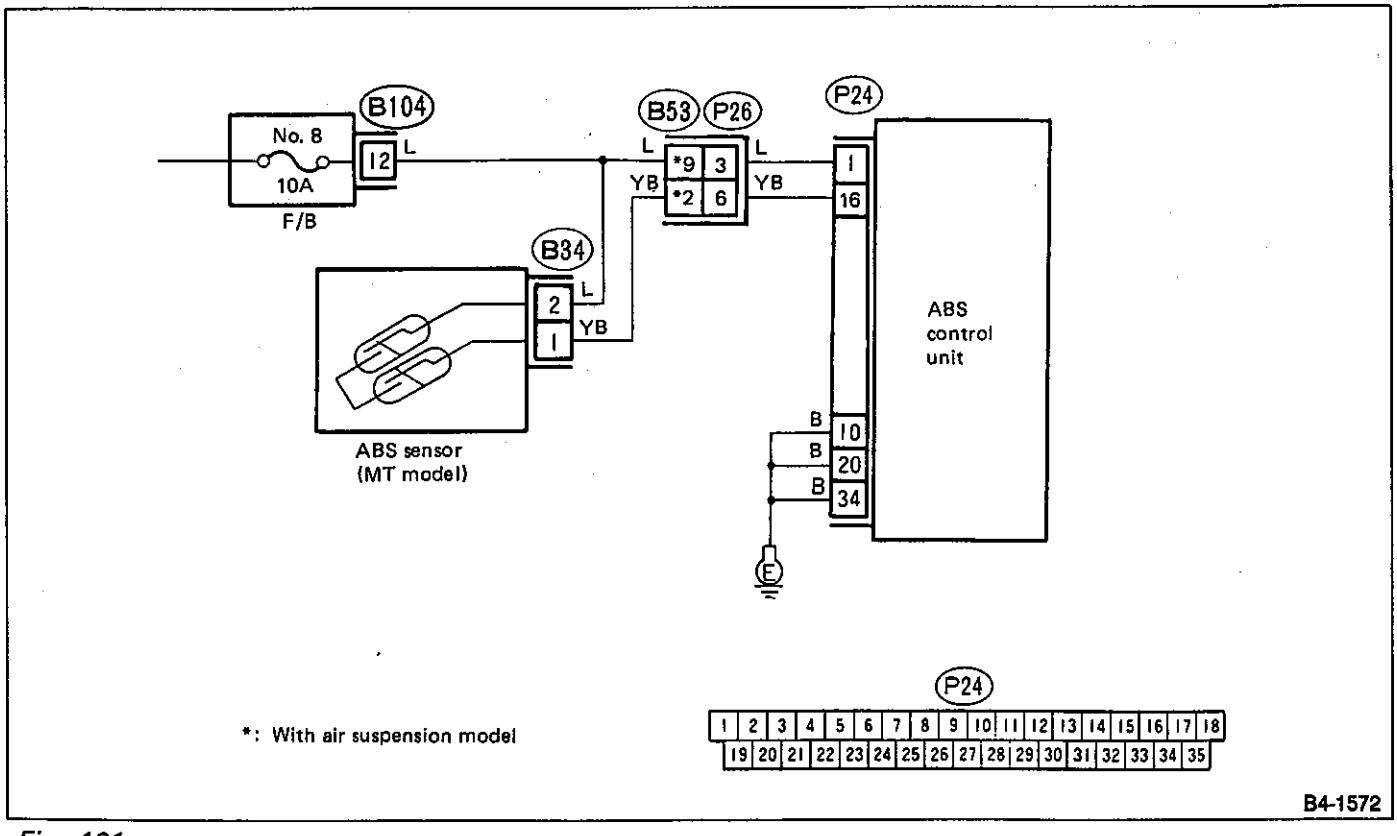

Fig. 191

1. CHECK CONTINUITY IN G SENSOR CIRCUIT (ON ABS CONTROL UNIT SIDE)

1) Position vehicle on a flat surface.
2) Disconnect connector from ABS control unit.
3) Disassemble connector.
4) Measure resistance between ABS control unit connector terminals.

Connector & terminal / Specified Resistance:
(P24) No. 1 — No. 16 / 550 — 670 Ω

2. CHECK G SENSOR

1) Disconnect G-sensor connector.
2) Measure resistance between G-sensor terminals. (Ensure that G sensor is horizontal during measurement.)

Specified Resistance:
550 — 670 Ω

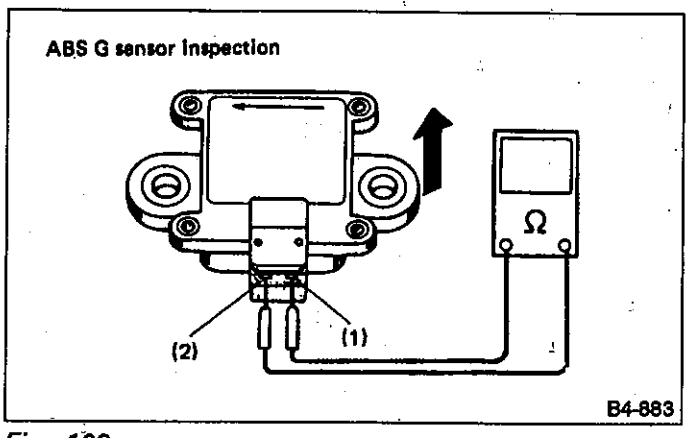

Fig. 192

3. CHECK AND REPAIR HARNESS BETWEEN ABS CONTROL UNIT AND G SENSOR

1) Turn ignition switch ON.
2) Connect G-sensor connector.
3) Measure voltage between connector and body.

Connector & terminal / Specified Voltage:
(B34) No. 2 — Body / 10 — 12 V
(P24) No. 16 — Body / 10 — 12 V

When resistance checks out "OK", replace ABS control unit.

7. General Troubleshooting Chart

A: VIBRATING PEDAL AND NOISE

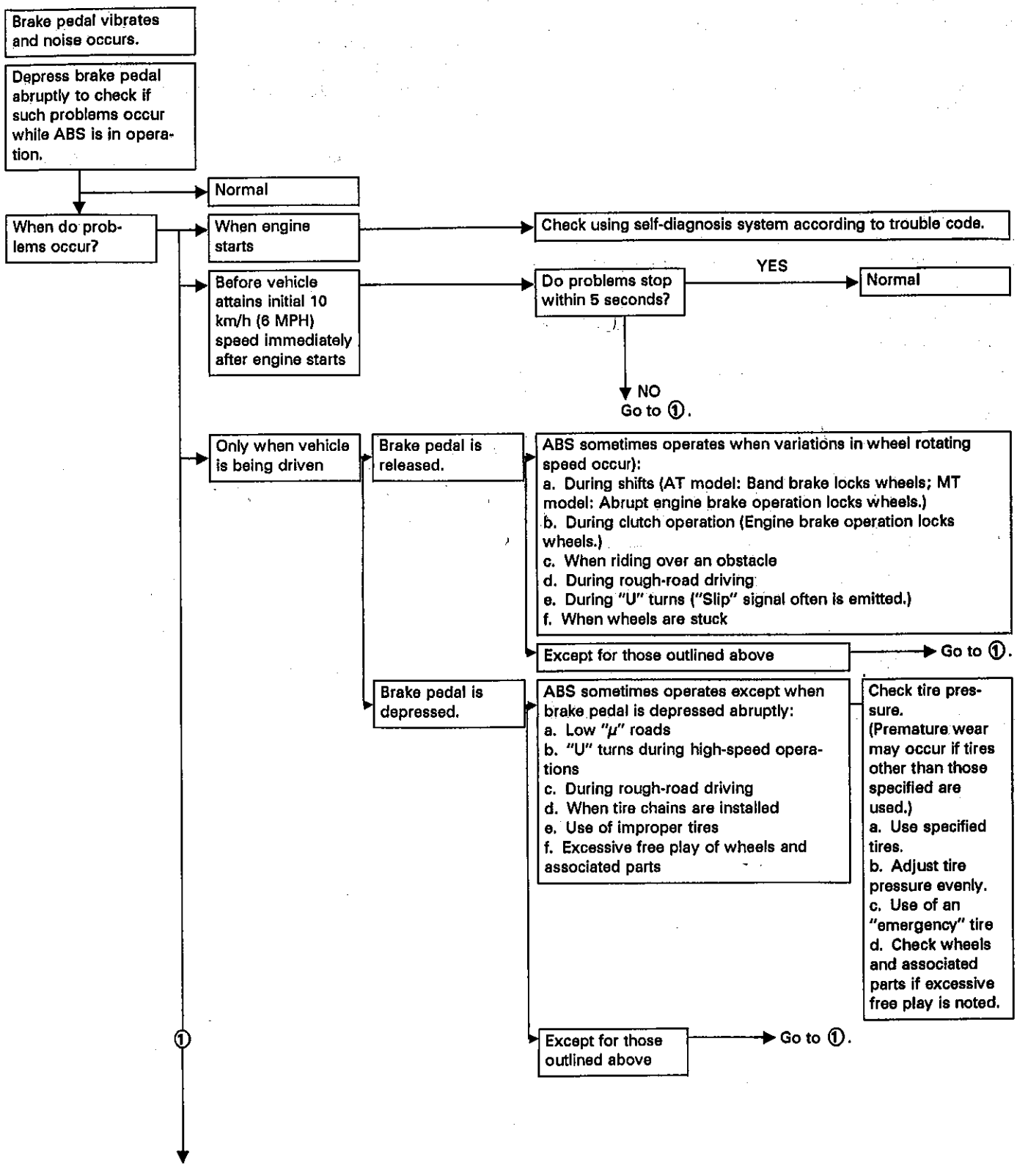

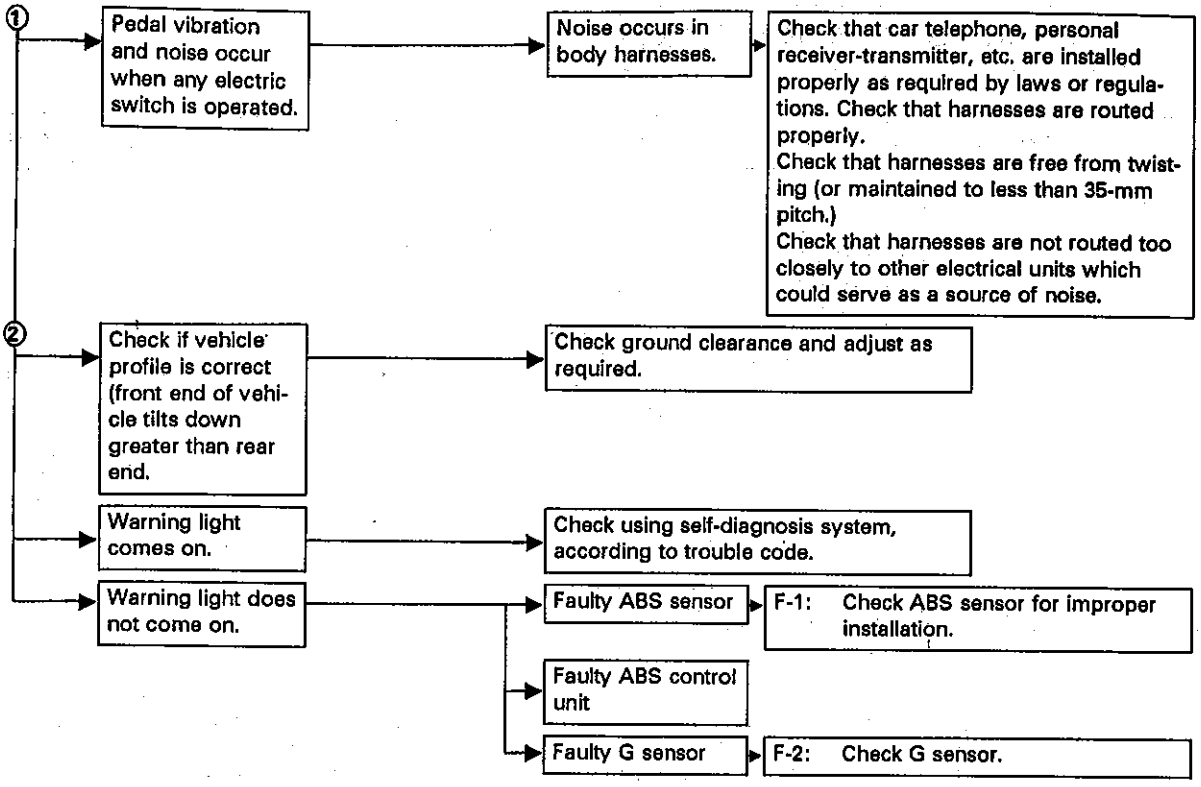
①
Pedal vibration and noise occur when any electric switch is operated.
Noise occurs in body harnesses.
Check that car telephone, personal receiver-transmitter, etc. are installed properly as required by laws or regulations. Check that harnesses are routed properly.
Check that harnesses are free from twisting (or maintained to less than 35-mm pitch.)
Check that harnesses are not routed too closely to other electrical units which could serve as a source of noise.
②
Check if vehicle profile is correct (front end of vehicle tilts down greater than rear end.
Check ground clearance and adjust as required.
Warning light comes on.
Check using self-diagnosis system, according to trouble code.
Warning light does not come on.
Faulty ABS sensor
F-1: Check ABS sensor for improper installation.
Faulty ABS control unit
Faulty G sensor
F-2: Check G sensor.

B: EXCESSIVE STOPPING DISTANCE

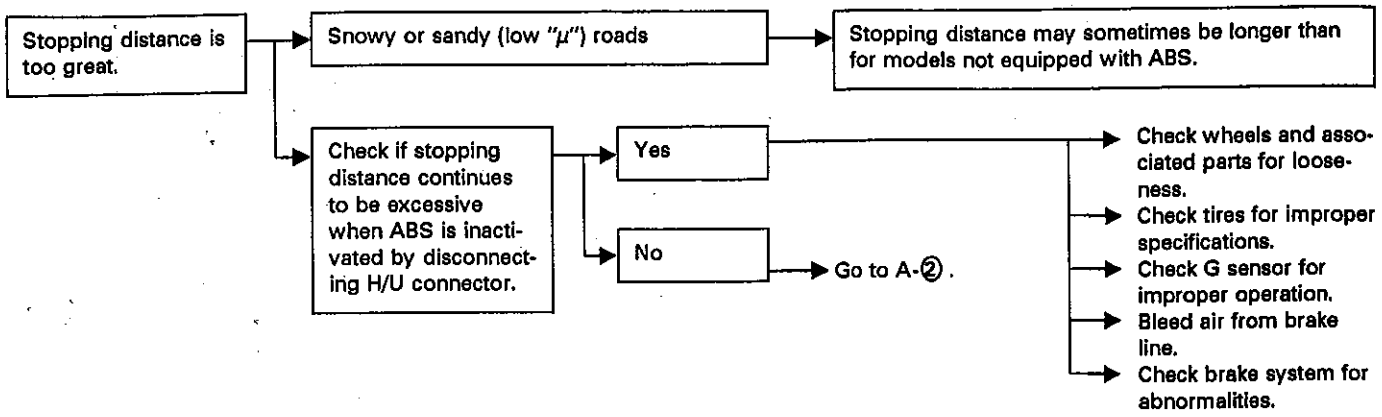

C: IMPROPER PEDAL OPERATION

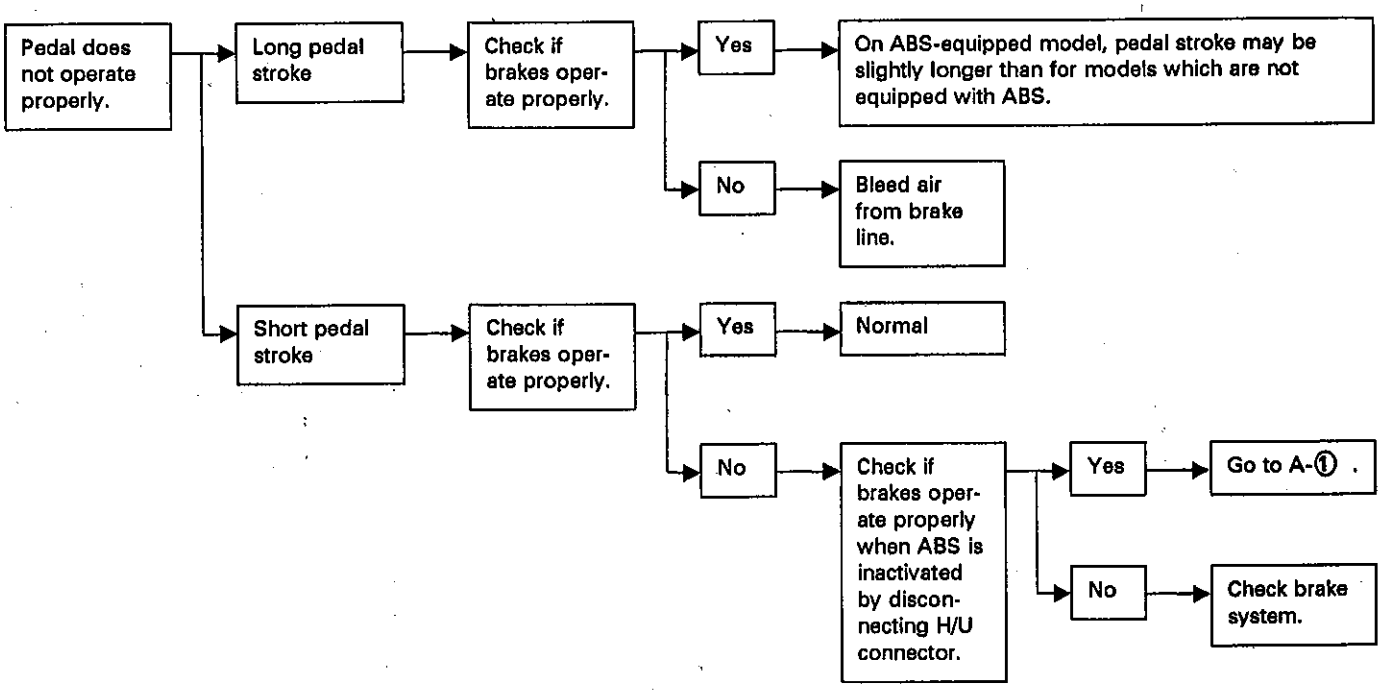

D: ABS INOPERATIVE

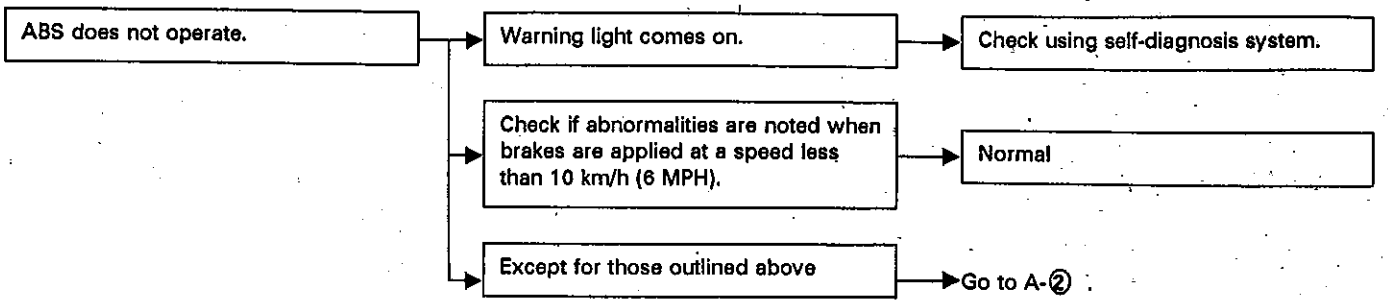

E: FREQUENT ABS OPERATION

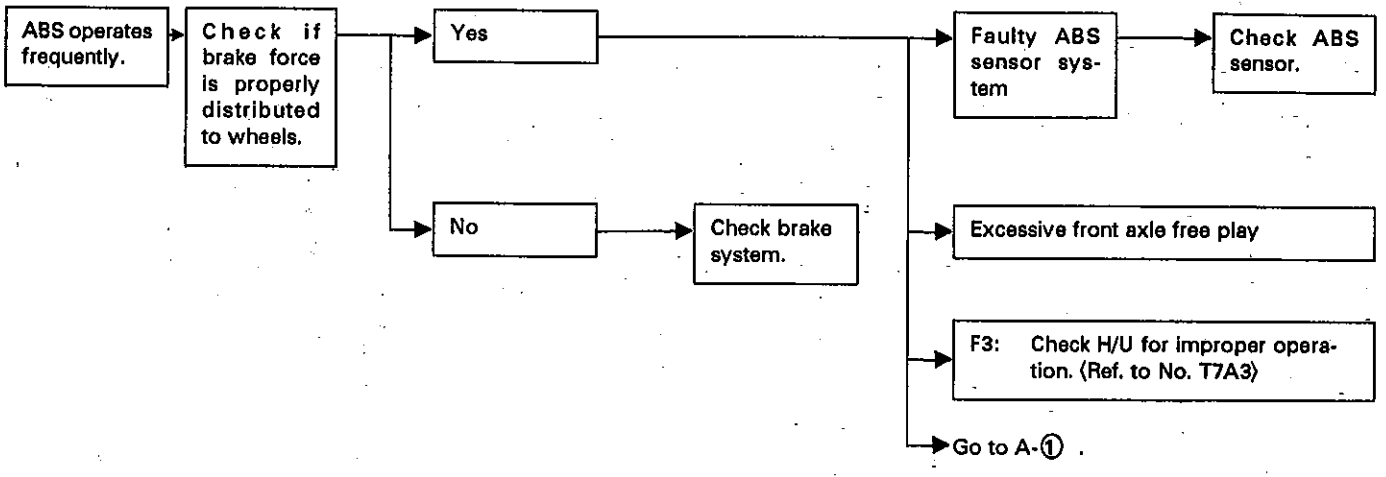

F: INSPECTION OF COMPONENTS

1. ABS SENSOR INSTALLATION

1) Dismount brake as outlined in manual to gain access to ABS sensor and tone wheel for inspection.
2) Check pole piece and tone wheel for accumulation of foreign particles. If necessary, remove foreign particles and clean.
3) Check tone wheel teeth for cracks for deformities. If necessary, replace tone wheel (No. of teeth: 44) with a new one.
4) Check tone wheel for looseness.

Tightening torque:
10 — 16 N•m (1 — 1.6 kg-m, 7 — 12 ft-lb)

5) Measure tone wheel-to-pole piece gap over entire perimeter of the wheel.

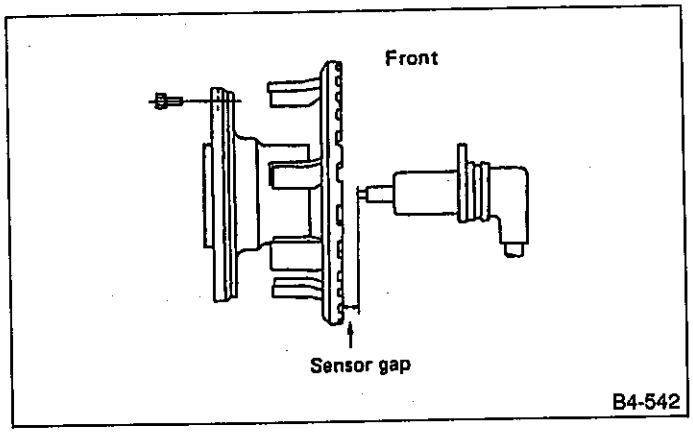

Fig. 193

Specifications	Front wheel	Rear wheel
	0.9 — 1.4 mm (0.035 — 0.055 in)	0.7 — 1.2 mm (0.028 — 0.047 in)

If measurements check out "Not OK", adjust the gap using spacers (Part No. 26755AA000). If spacers cannot correct the gap, replace worn sensor or worn tone wheel.
6) Check hub runout.

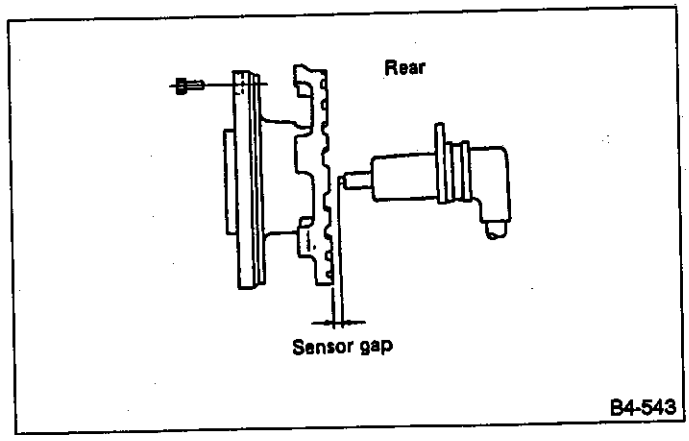

Fig. 194

Specifications	0.05 mm (0.0020 in)

7) For inspection procedures of sensors, refer to "Trouble Codes 5, 6, 7 and 8".

2. G SENSOR INSPECTION

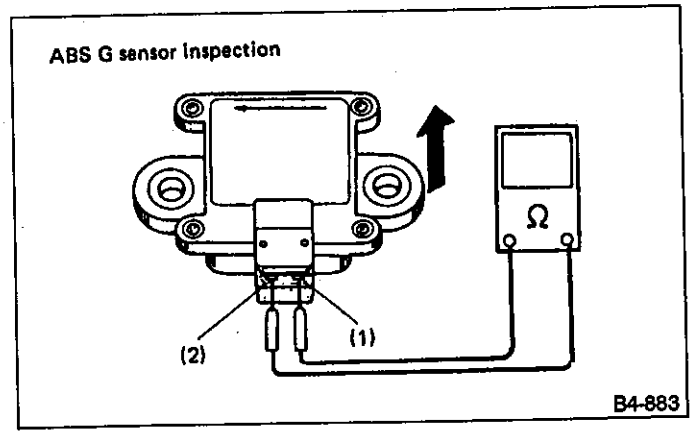

Fig. 195

1) Remove G sensor.
2) Check continuity between G-sensor terminals (1) and (2).
3) Tilt G sensor down in vehicle's advancing direction.

Specifications	Horizontal position	When tilted forward greater than 14 — 21.3°
	Continuity exists. (550 — 670 Ω)	Continuity does not exist. 550 — 670 Ω

3. HYDRAULIC UNIT INSPECTION

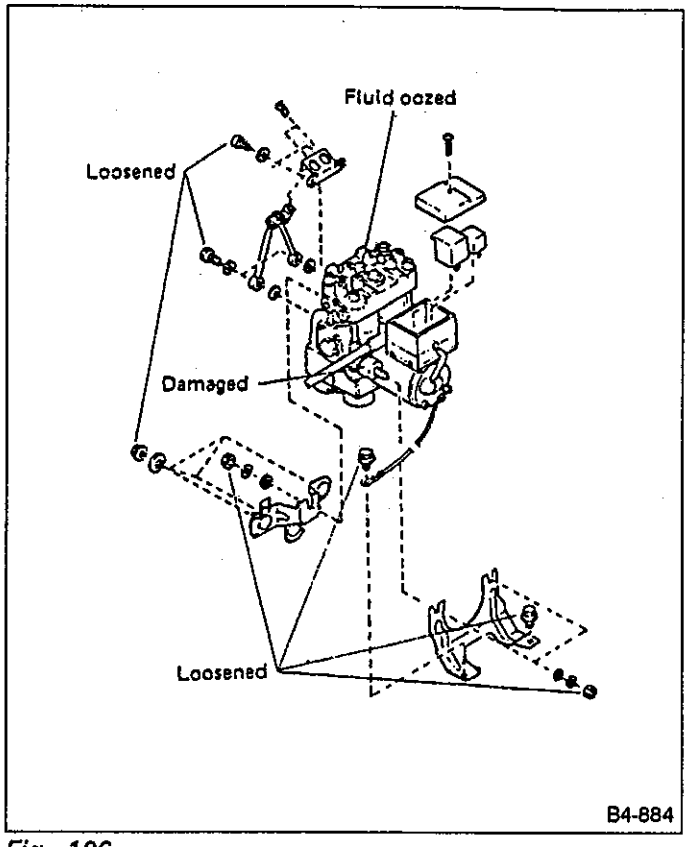

Fig. 196

1) Check parts for traces of brake fluid or dents. Clean parts and tighten pipe connections, etc. if traces of brake fluid are noted. Replace hydraulic unit if parts are excessively dented or damaged.
2) Check bracket for looseness or improper installation, damper for damage, and attaching nuts for looseness.

Specifications	Parts must be tightly in place and free from damage.

3) Check connectors for improper installation.

Specifications	Connectors must be tight and secure.

4) Check each relay as a single unit. Refer to "Trouble Code 9" for inspection of motor relay and "Trouble Code 10" for valve relay.
5) Valve inspection
Refer to step 1 under "Trouble Code 1 through 4" for instructions.

PEDAL SYSTEM AND CONTROL CABLES

4-5

SUBARU®

1992

SERVICE MANUAL

		Page
M	MECHANISM AND FUNCTION	2
	1. Pedal Effort Reducing Mechanism	2
	2. Hydraulic Clutch Pedal System [TURBO]	3
S	SPECIFICATIONS AND SERVICE DATA	4
C	COMPONENT PARTS	5
	1. Pedal (Manual Transmission)	5
	2. Pedal (Automatic Transmission)	7
W	SERVICE PROCEDURE	8
	1. Pedal	8
	2. Clutch Cable	14
	3. Accelerator Cable	15
	4. Speedometer Cable	16
T	TROUBLESHOOTING	17

M MECHANISM AND FUNCTION

1. Pedal Effort Reducing Mechanism

The pedal effort reducing mechanism uses a mechanical turnover system as shown below. It is installed on vehicles which require a large force for the clutch pedal.

A: CONSTRUCTION

An arm is made integral with the clutch pedal, and spring-hook is connected to the arm end bushing.

B: OPERATION

When the clutch pedal is depressed, point A moves toward point B, spring-hook makes a swing. The pedal depressing effort becomes small when the prolonged line of the spring-hook passes over the center of the pedal shaft.

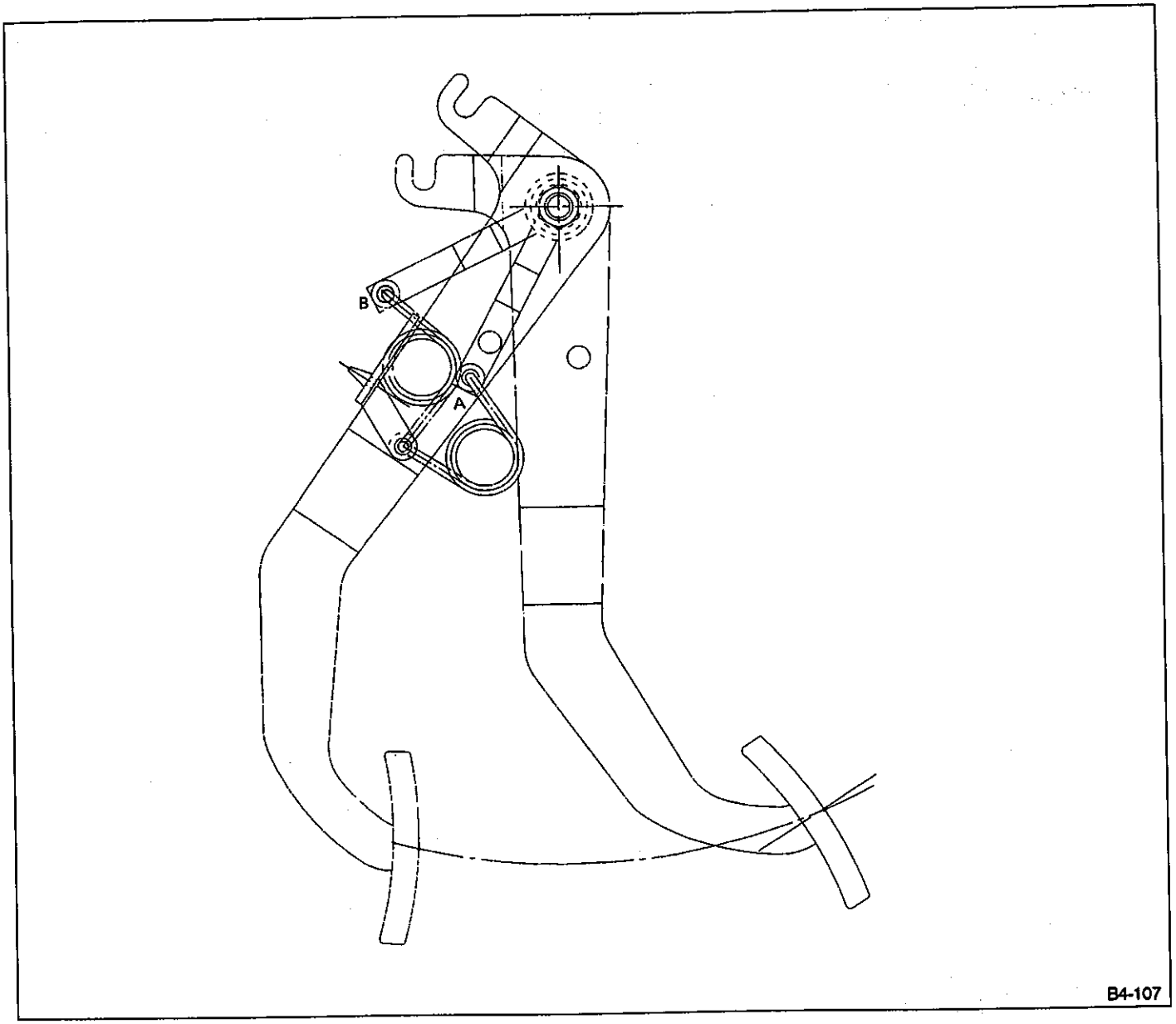

Fig. 1

2. Hydraulic Clutch Pedal System [TURBO]

A: CONSTRUCTION

The hydraulic clutch pedal is connected to the master cylinder (which produces oil pressure) via a rod.

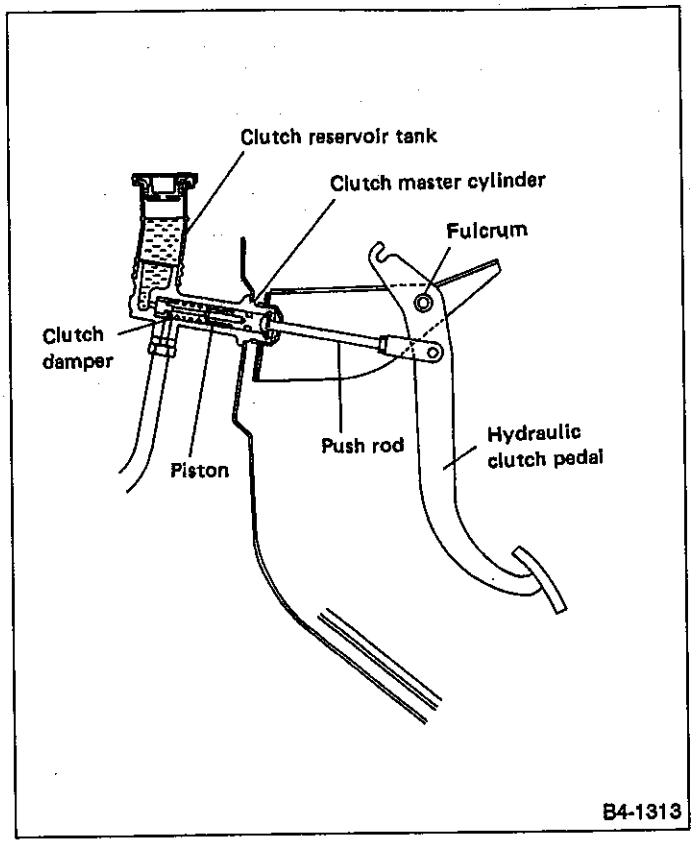

Fig. 2

B: OPERATION

The operating principle of the hydraulic clutch pedal system is similar to that of a mechanical clutch pedal system except that a return spring returns the clutch pedal to the original position.

S SPECIFICATIONS AND SERVICE DATA

A: SERVICE DATA

Brake pedal	Free play		1 — 3 mm (0.04 — 0.12 in) [Depress brake pedal pad with a force of less than 10 N (1 kg, 2 lb)]
Clutch pedal	Free play	At clutch pedal pad	Non-Turbo: 10 — 20 mm (0.39 — 0.79 in) Turbo: 3 — 15 mm (0.12 — 0.59 in)
	Full stroke	At clutch pedal pad	145 — 150 mm (5.71 — 5.91 in)
Accelerator pedal	Free play	At pedal pad	1 — 4 mm (0.04 — 0.16 in)
	Stroke	At pedal pad	46 — 50 mm (1.81 — 1.97 in)

C COMPONENT PARTS

1. Pedal (Manual Transmission)

1. Non-TURBO

Tightening torque: N•m (kg-m, ft-lb)
T1: 13 — 23 (1.3 — 2.3, 9 — 17)
T2: 13 — 23 (1.3 — 2.3, 9 — 17)
T3: 23 — 36 (2.3 — 3.7, 17 — 27)
T4: 6 — 10 (0.6 — 1.0, 4.3 — 7.2)
T5: 5.4 — 9.3 (0.55 — 0.95, 4.0 — 6.9)

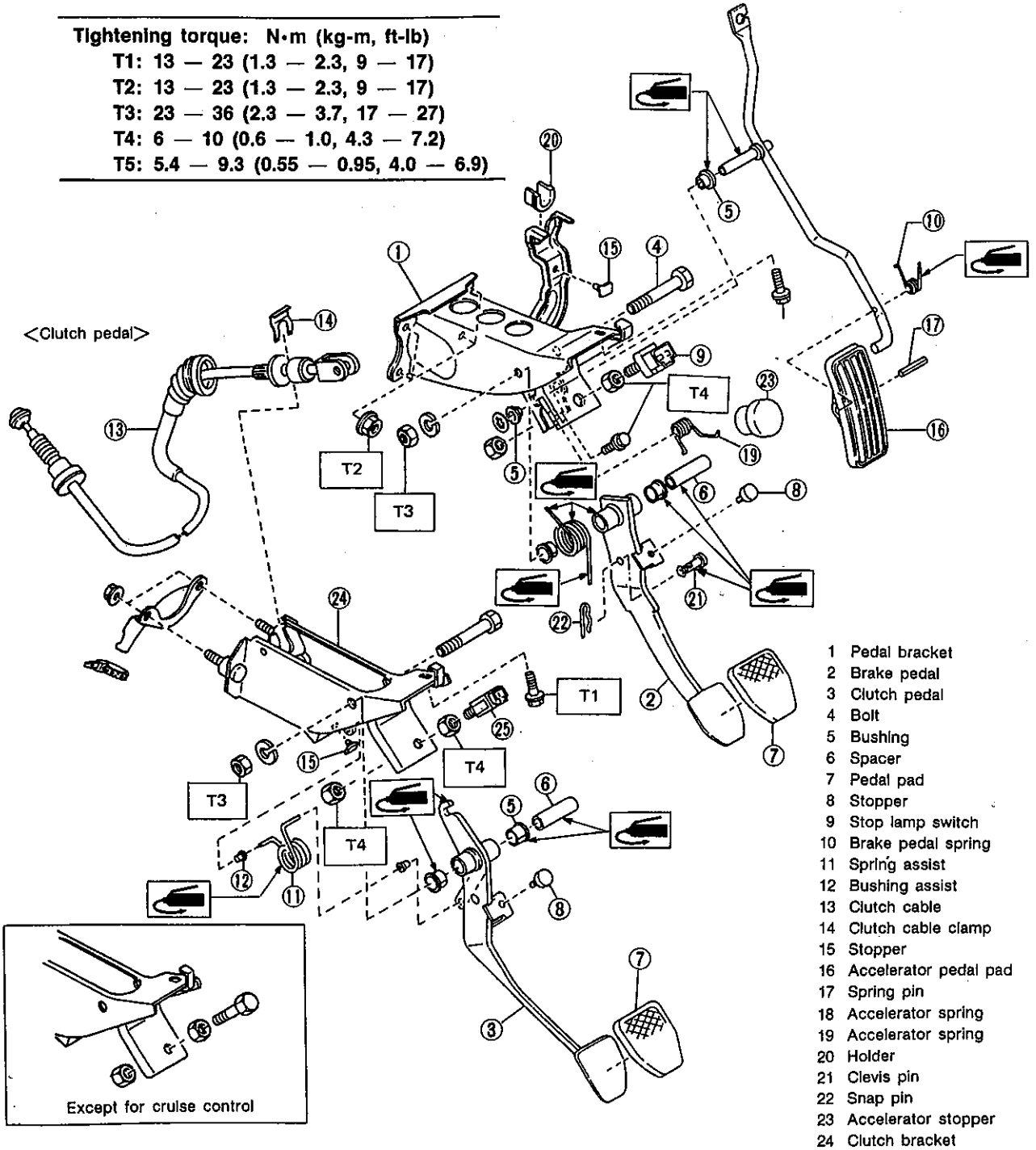

1 Pedal bracket
2 Brake pedal
3 Clutch pedal
4 Bolt
5 Bushing
6 Spacer
7 Pedal pad
8 Stopper
9 Stop lamp switch
10 Brake pedal spring
11 Spring assist
12 Bushing assist
13 Clutch cable
14 Clutch cable clamp
15 Stopper
16 Accelerator pedal pad
17 Spring pin
18 Accelerator spring
19 Accelerator spring
20 Holder
21 Clevis pin
22 Snap pin
23 Accelerator stopper
24 Clutch bracket
25 Clutch switch

B4-1553

Fig. 3

2. TURBO

Tightening torque: N·m (kg-m, ft-lb)
T1: 13 — 23 (1.3 — 2.3, 9 — 17)
T2: 13 — 23 (1.3 — 2.3, 9 — 17)
T3: 23 — 36 (2.3 — 3.7, 17 — 27)
T4: 6 — 10 (0.6 — 1.0, 4.3 — 7.2)
T5: 5.4 — 9.3 (0.55 — 0.95, 4.0 — 6.9)

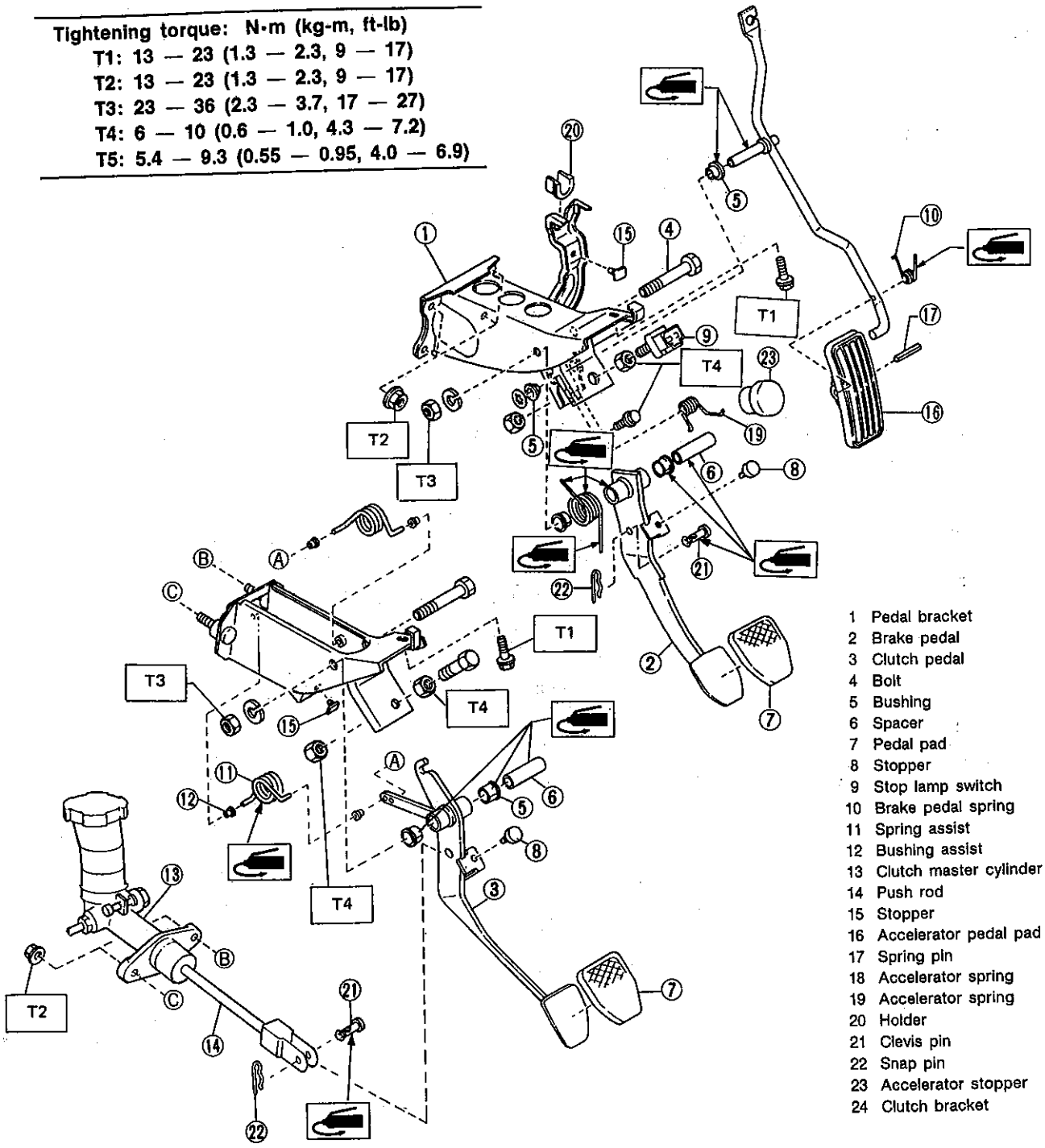

1 Pedal bracket
2 Brake pedal
3 Clutch pedal
4 Bolt
5 Bushing
6 Spacer
7 Pedal pad
8 Stopper
9 Stop lamp switch
10 Brake pedal spring
11 Spring assist
12 Bushing assist
13 Clutch master cylinder
14 Push rod
15 Stopper
16 Accelerator pedal pad
17 Spring pin
18 Accelerator spring
19 Accelerator spring
20 Holder
21 Clevis pin
22 Snap pin
23 Accelerator stopper
24 Clutch bracket

B4-1554

Fig. 4

2. Pedal (Automatic Transmission)

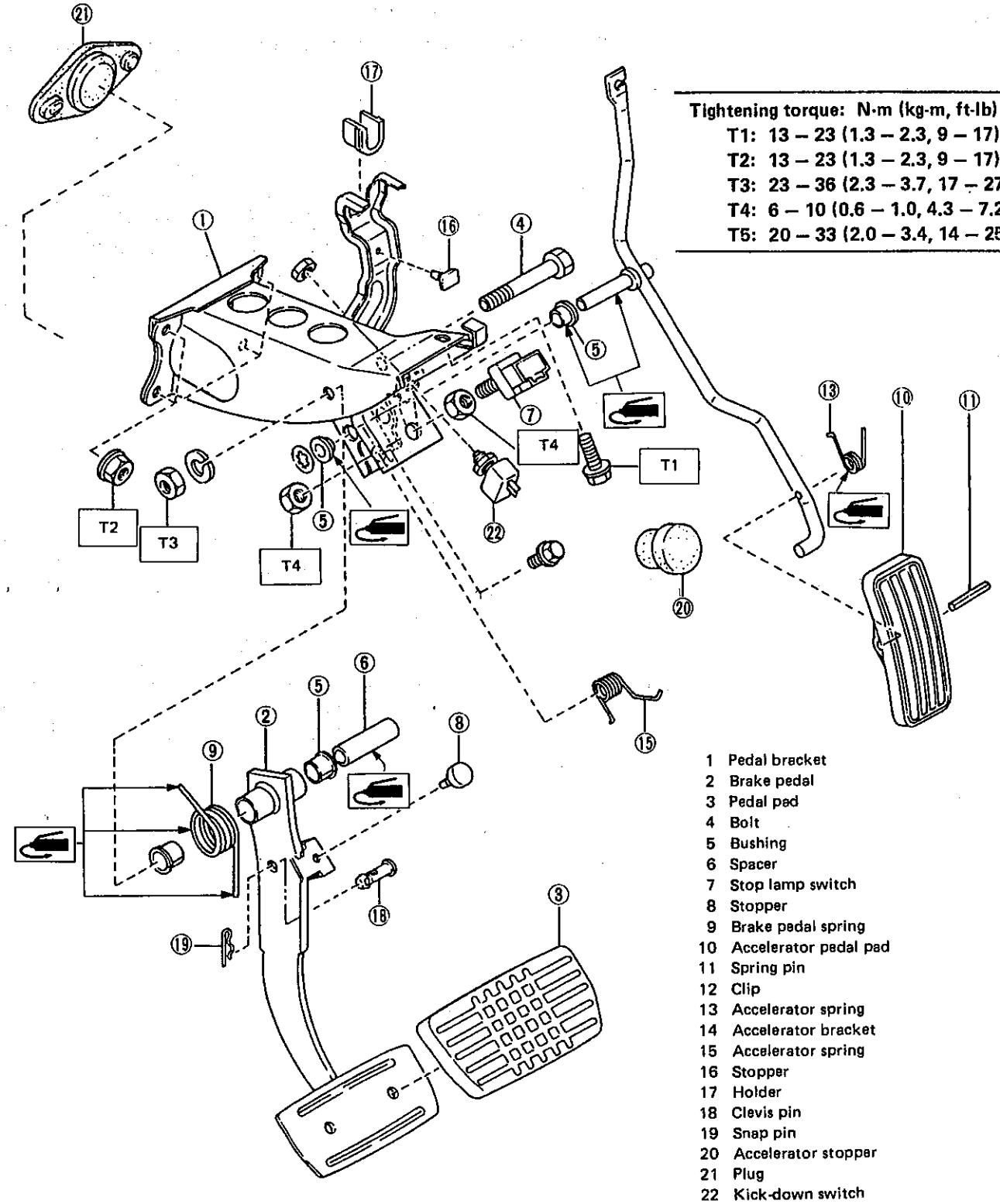

Fig. 5

W SERVICE PROCEDURE

1. Pedal

A: ON-CAR SERVICE

1. BRAKE PEDAL

1) Check position of pedal pad.
If it is not in specified value, adjust it by adjusting brake booster operating rod length.
2) Check free play by operating pedal by hand.
If it is not in specified value, adjust it by adjusting position of stop lamp switch.

Be careful not to rotate stop lamp switch.

3) Apply grease to operating rod connecting pin to prevent it from wearing.

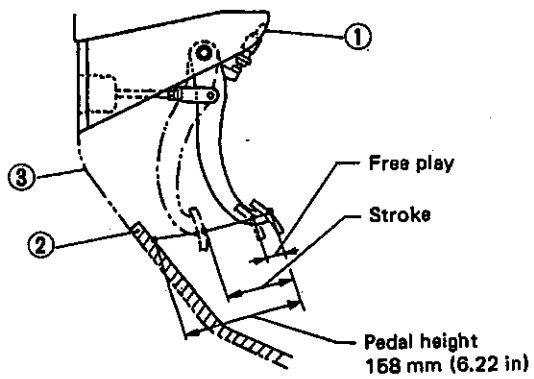

1 Stop light switch
2 Mat
3 Toe board

Brake pedal free play:
1 – 3 mm (0.04 – 0.12 in)
[Depress brake pedal pad with a force of less than 10 N (1 kg, 2 lb)]

B4-110

Fig. 6

2. CLUTCH PEDAL

1) Check clutch pedal free play by operating pedal by hand.

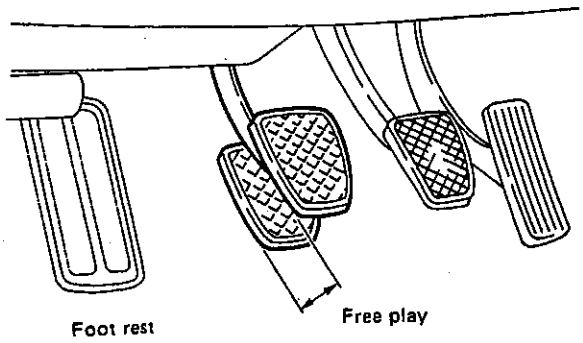

Free play:
Non-Turbo:
at clutch pedal pad
10 — 20 mm (0.39 — 0.79 in)
at center of cable on clutch release fork
3 — 4 mm (0.12 — 0.16 in)
Turbo:
at clutch pedal pad
3 — 15 mm (0.12 — 0.59 in)

B4-1317

Fig. 7

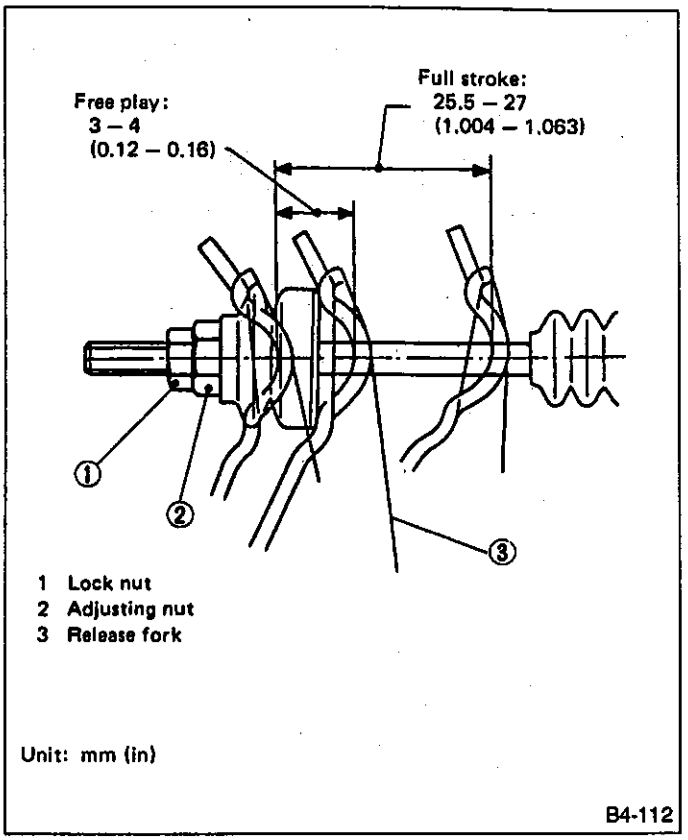

Fig. 8

2) Mechanical application type [Non-TURBO]

(1) If it is not in specified value, adjust it by turning adjusting nut on engine side end of clutch cable.

(2) Apply grease to connecting portion of clutch pedal and clutch cable.

3) Hydraulic application type [TURBO]

(1) If it is out of specification, loosen lock nut for push rod and adjust push rod by turning in the direction that shortens or lengthens it.

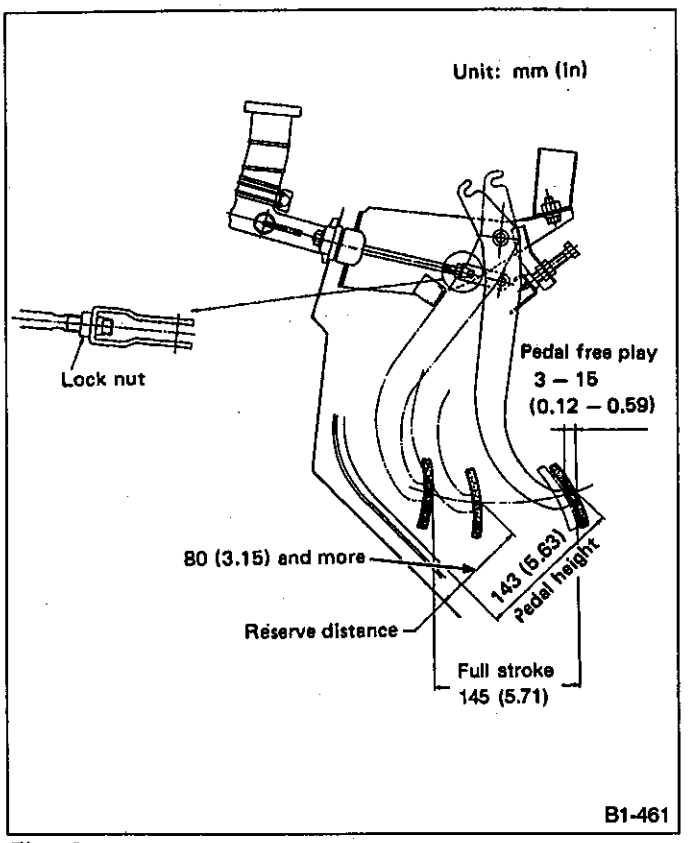

Fig. 9

Tightening torque (Adjusting nut):
9 — 11 N•m (0.9 — 1.1 kg-m, 6.5 — 8.0 ft-lb)

(2) Check the fluid level on the outside of the clutch master cylinder tank. If the level is below "MIN", add clutch fluid to bring it up to "MAX".

Recommended clutch fluid:
FMVSS No. 116, fresh DOT 3 or DOT 4 brake fluid

3. ACCELERATOR PEDAL

Check pedal stroke and free play by operating accelerator pedal by hand.
If it is not within specified value, adjust it by turning nut connecting accelerator cable to throttle body.

Free play at pedal pad:
0 — 2 mm (0 — 0.08 in)

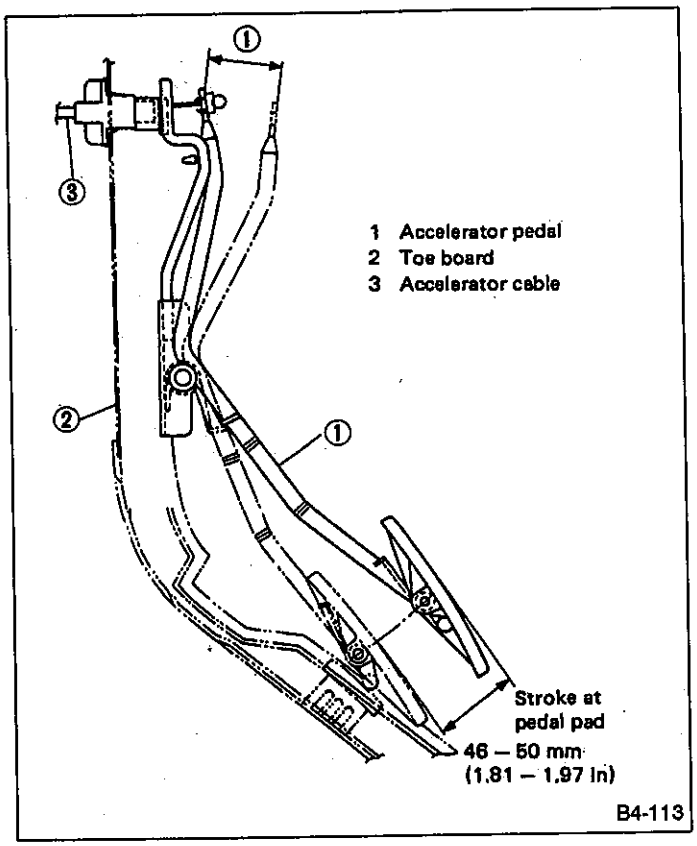

Fig. 10

Check to ensure the kick down switch operates at the specified value in relation to the stroke of the accelerator pedal.

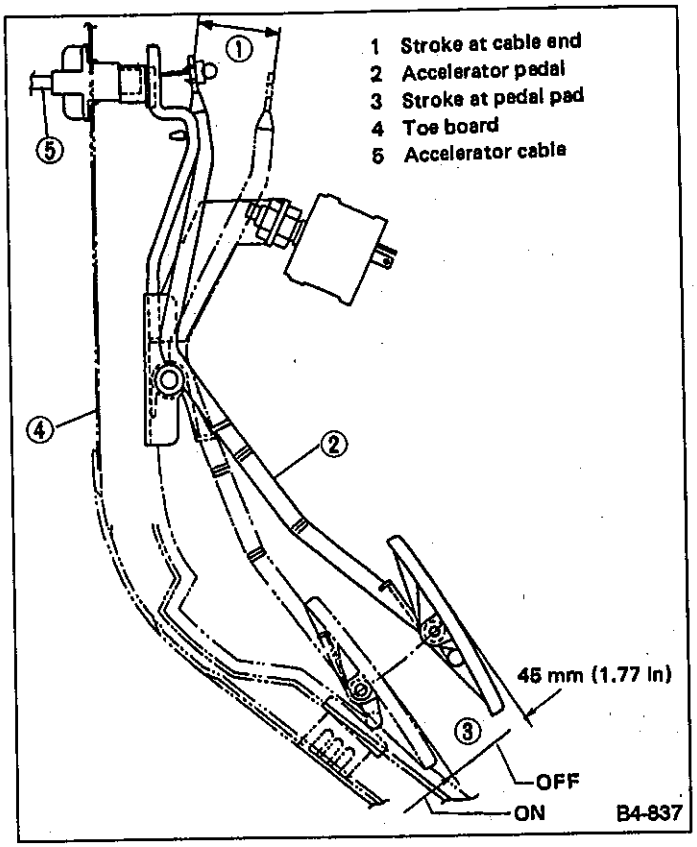

Fig. 11

B: REMOVAL

1. ACCELERATOR AND BRAKE PEDAL ASSY

1) Disconnect ground cable from battery.
2) Disconnect accelerator cable from throttle body.

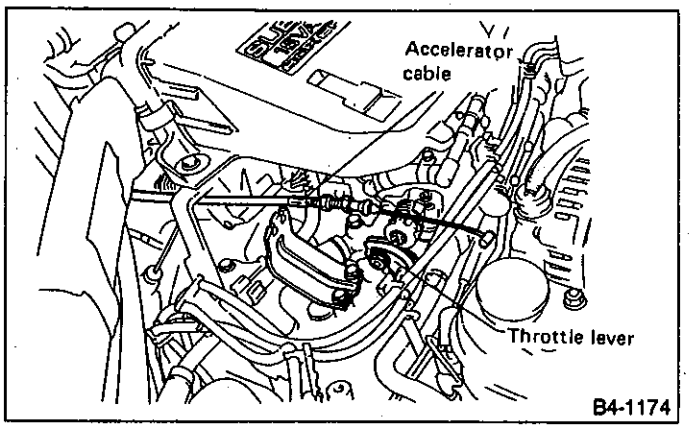

Fig. 12

3) Attach a wrench to the casing cap above toeboard, and turn the casing cap clockwise to remove it.

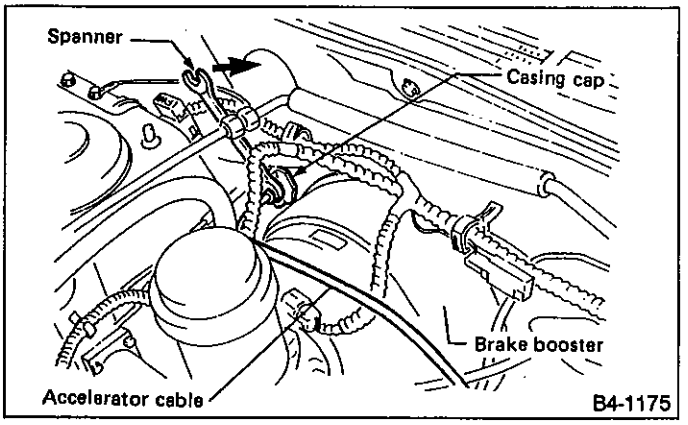

Fig. 13

4) Remove lower instrument cover located above accelerator and brake pedals.
5) Remove bushing from front end of accelerator pedal.
While using a standard screwdriver or a suitable tool to rear of bushing, lever off bushing.

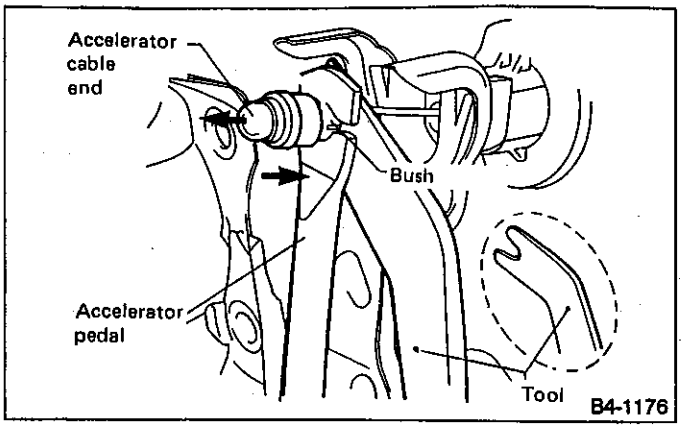

Fig. 14

6) Disconnect accelerator and stop lamp switch harness connectors.
7) Remove the pin which connects brake pedal and operating rod.

Operating rod length is preset at the factory. Do not attempt to loosen the lock nut.

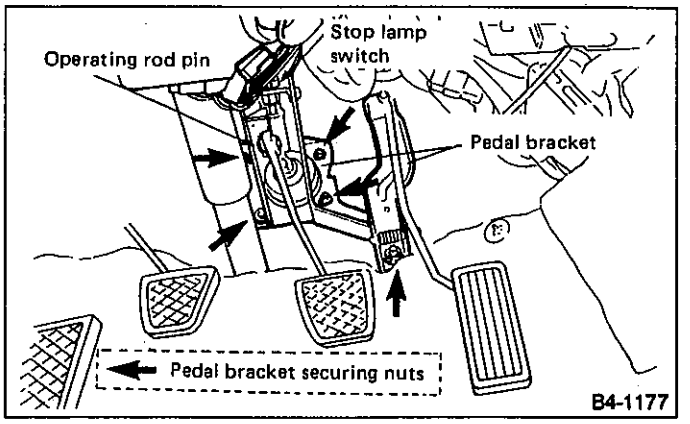

Fig. 15

8) Remove nuts which secure pedal bracket.

2. CLUTCH PEDAL ASSY

1) Mechanical application type [Non-TURBO]
   (1) Disconnect end of clutch cable on the engine side.
   (2) Remove two flange nuts at bracket location.
   (3) Remove lower instrument cover.
   (4) Remove the bolt which secures bracket.
   (5) Remove clutch pedal ASSY together with clutch cable.
2) Hydraulic application type [TURBO]
   (1) Remove master cylinder cover.
   (2) Remove master cylinder mounting nuts.
   (3) Remove snap pin and clevis pin that join pushrod and clutch pedal.
   (4) Remove clutch pedal and bracket as a unit.

C: INSPECTION

1. ACCELERATOR AND BRAKE PEDAL ASSY

1) Disassemble accelerator and brake pedals. Remove any grease from the shaft, spacer, and bushing and check these parts for wear or damage.
2) Lightly move pedal pad in the lateral direction to ensure pedal deflection is in specified range.

Deflection of accelerator pedal:
Service limit
5.0 mm (0.197 in) or less

If excessive deflection is noted, replace bushing and clip with new ones.

2. CLUTCH PEDAL

1) Check pedal shaft and bushing for wear or damage.
2) Move brake and clutch pedal pads in the lateral direction with a force of approximately 10 N (1 kg, 2 lb) to ensure pedal deflection is in specified range.

Deflection of brake and clutch pedal:
Service limit
5.0 mm (0.197 in) or less

If excessive deflection is noted, replace bushing and clip with new ones.

3. STOP LAMP SWITCH

If stop lamp switch does not operate properly (or if it does not stop at the specified position), replace with a new one.

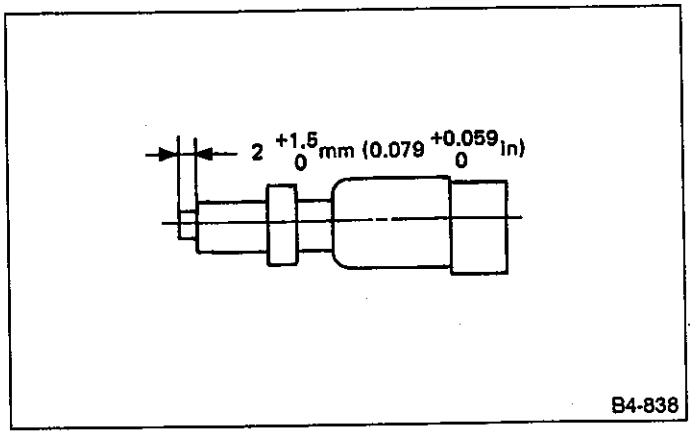

Fig. 16

4. KICK DOWN SWITCH

If kick down switch does not operate properly (or if it does not stop at the specified position), replace with a new one.

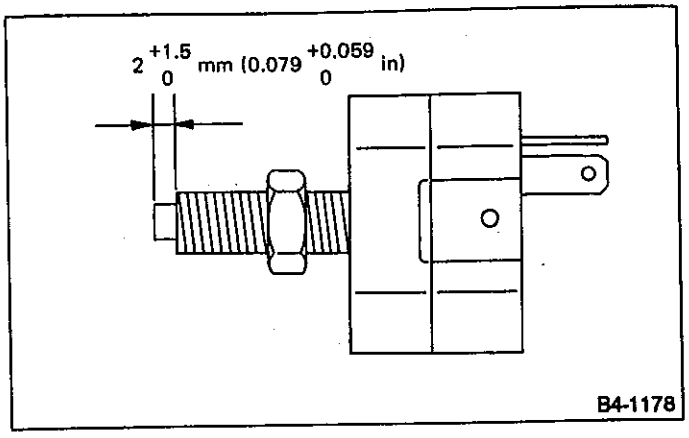

Fig. 17

D: INSTALLATION

1. ACCELERATOR AND BRAKE PEDAL ASSY

To install, reverse removal procedures. Observe the following:

1) After installing accelerator cable casing cap on toeboard, check that casing cap and holder are properly connected at position "A" while holding a mirror on the compartment side.

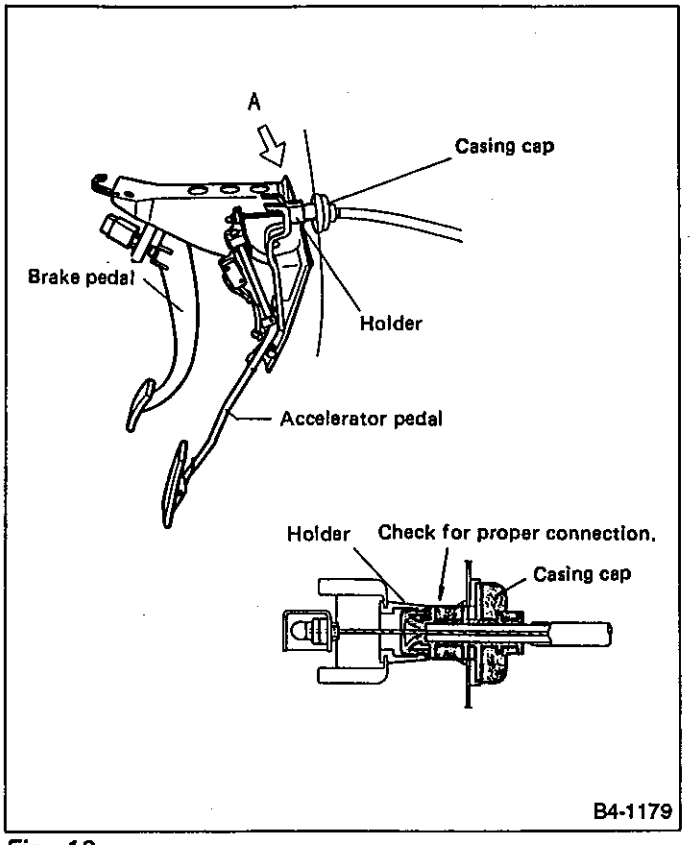

Fig. 18

2) Check brake pedal free play and clearance (pedal height above the floor).

Free play:
1 — 3 mm (0.04 — 0.12 in)
Clearance:
ℓ1: 150 — 160 mm (5.91 — 6.30 in)
ℓ2: 179 — 185 mm (7.05 — 7.28 in)

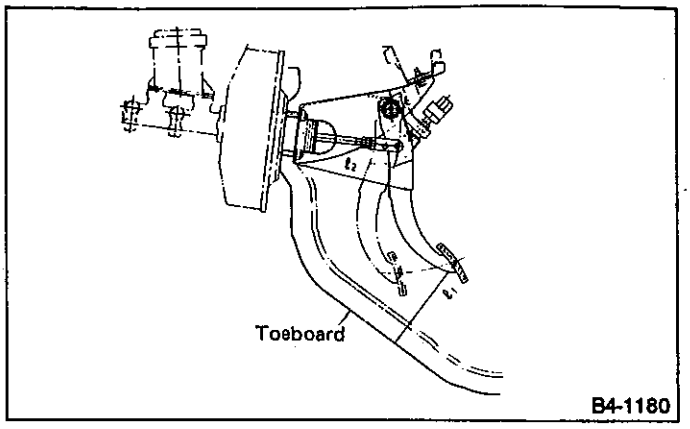

Fig. 19

3) After installing accelerator cable, check the clearance between throttle lever and outer end cable.

Clearance: 1 — 8 mm (0.04 — 0.31 in)

4) Check that kick down switch turns ON when pedal is depressed 45 mm (1.77 in), which is measured at pedal pad.

2. CLUTCH PEDAL

1) Mechanical application type [Non-TURBO]
   (1) Clean clutch cable, pedal shaft and bushing, and apply grease.
   (2) Connect clutch pedal and clutch cable as follows:
   (3) Attach clutch cable to pedal hook.
   (4) Insert end of clutch cable into bracket, and secure it with a clamp.
   (5) Check clutch pedal free play. If it is less than the specified value, adjust it on transmission side.
2) Hydraulic application type [TURBO]
   (1) Clean clutch pedal shaft and bushing, and apply grease.
   (2) Install pushrod and clutch pedal with clevis pin and snap pin.
   (3) Install master cylinder.
   (4) Install master cylinder cover.
   (5) Check clutch pedal free play.
   Refer to ON-CAR SERVICE 4-5. [W1A2]

2. Clutch Cable

A: REMOVAL

1) Disconnect end of cable on release fork side.
2) Remove nuts which secure clutch pedal to bulkhead of engine compartment, and remove cable bracket.
3) Remove bolts which secure clutch pedal on driver's compartment side, and remove pedal and cable as a unit.
4) Remove clamp from pedal bracket, and disconnect pedal from cable.

B: INSTALLATION

1) Attach end of cable to pedal hook.
2) Insert end of outer cable into bracket, and secure it with a clamp.
3) To assure proper cable and pedal operation, adjust as follows:
After attaching end of cable to pedal hook, adjust stopper until it lightly contacts lower end of auto adjuster.
4) Check that pedal returns to its original position.
Disconnect boot at end of outer cable, and insert inner cable into bracket.
5) Position bushing located at end of outer cable in bracket.
6) Install boot onto bushing at end of outer cable.
7) Insert cable into place through groove in release lever.
8) Adjustment after cable installation

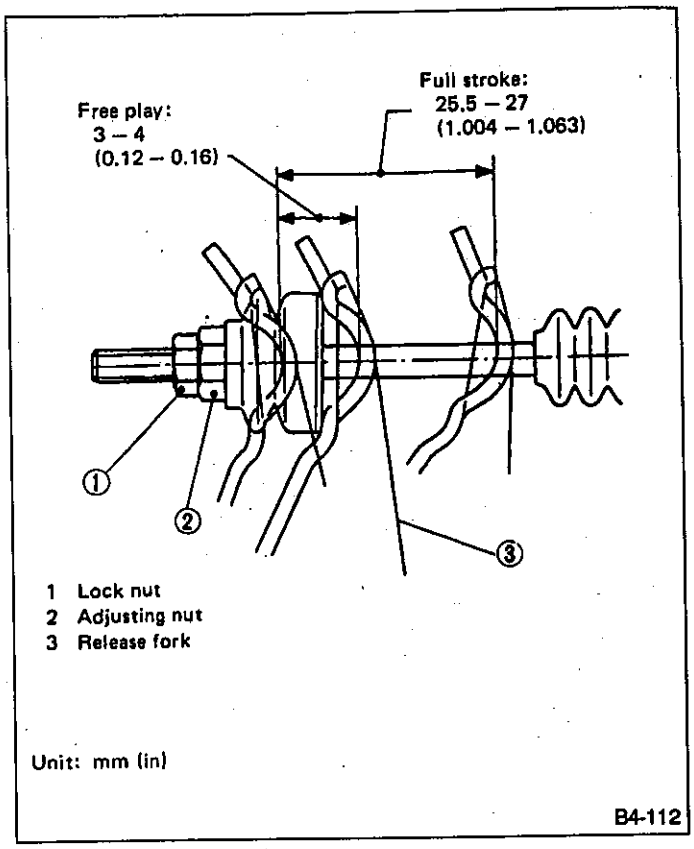

Fig. 20

Refer to ON-CAR SERVICE. [W1A2]

3. Accelerator Cable

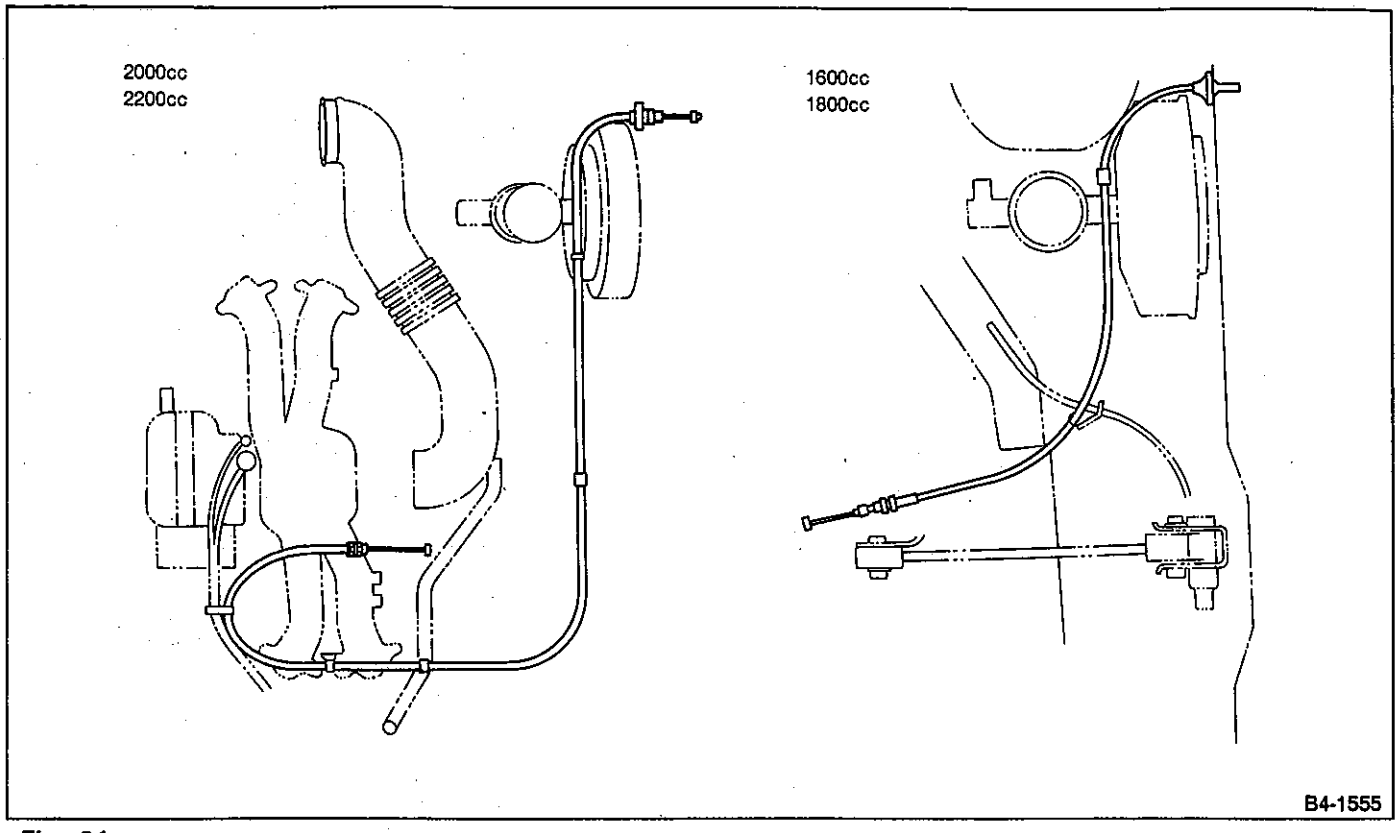

Fig. 21

A: REMOVAL

1) Disconnect accelerator cable from connector inside engine compartment first.
2) Remove adjusting nut and boot from accelerator cable bracket.
3) Separate accelerator cable from bracket, then unlock inner cable.

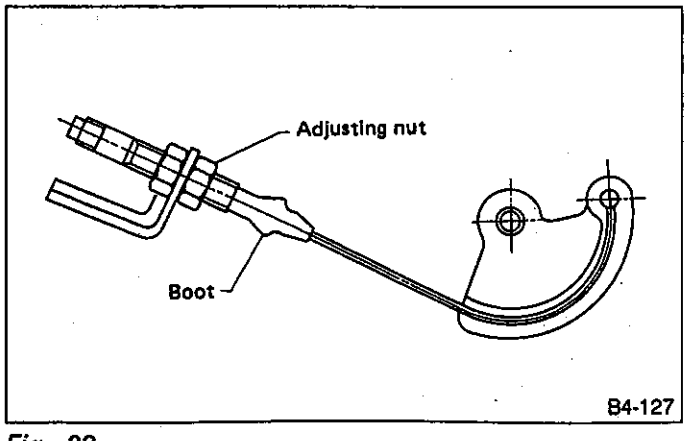

Fig. 22

4) Remove cable end from throttle cam using your fingertips.
Be careful not to bend inner cable.
5) Disconnect cable end from accelerator cable bracket inside driver compartment.
6) Remove clip inside engine compartment.
7) Working inside engine compartment, remove cable connection by turning toe board clockwise.

B: INSTALLATION

1) Pass inner cable through toe board hole and route inside driver compartment. Install cable bushing on accelerator pedal end.
2) While turning accelerator cable counterclockwise, transfer it to driver compartment through toe board hole.
3) Connect accelerator cable to upper holder of accelerator pedal.
4) Install clip inside engine compartment.
5) To install cable to throttle cam, reverse the order of the removal procedures.

Tightening torque:
10 — 18 N•m (1.0 — 1.8 kg-m, 7 — 13 ft-lb)

4. Speedometer Cable

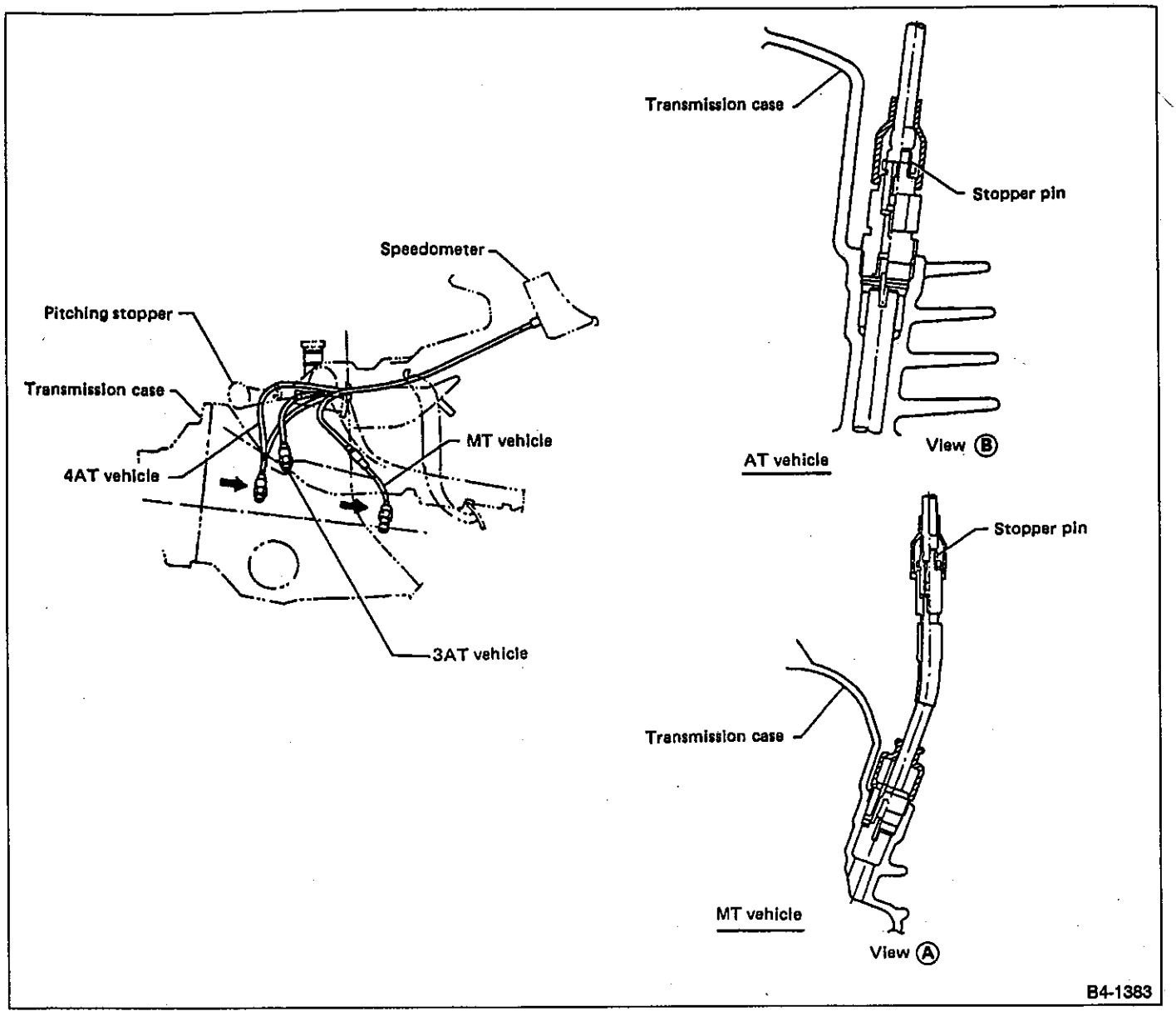

Fig. 23

A: REMOVAL

1) Remove speedometer cable, starting with its mid-point connection inside engine compartment.
2) While holding up boot located at speedometer cable connection, slightly expand clip. Extract speedometer cable by pulling it upward 2 to 3 mm (0.08 to 0.12 in) on speedometer side. Then, release clip and remove speedometer cable.
3) After disconnecting cable from speedometer, pull it out of toe board.
4) Remove screw which secures speedometer cable to transmission side.

B: INSTALLATION

1) After manually screwing speedometer cable on transmission side, tighten it 45 to 90° using a wrench.
2) Securely install boot onto midpoint connection of speedometer cable to prevent entry of water.

T TROUBLESHOOTING

Trouble	Corrective action
Excessively worn brake pedal pad	Replace.
Failure of clutch and/or accelerator pedals to operate	Connect cables correctly.
Speedometer does not work.	Connect speedometer cable correctly.
Stop lamp switch does not light up.	Adjust position of stop lamp switch.
Stop lamp switch is not smooth and/or stroke is not correct.	Replace.
Insufficient pedal play	Adjust pedal play.
Brake pedal freeplay insufficient	Adjust pedal freeplay.
Maladjustment of brake pedal or booster push rod	Inspect and adjust.
Excessively worn and damaged pedal shaft and/or bushing	Replace bushing and/or shaft with new one.

SUBARU®

1992

SERVICE MANUAL

	Page
M MECHANISM AND FUNCTION	2
1. Outline	2
2. Control Unit	6
3. Mode Door Control	9
4. Intake Door Control	11
5. Blower System	12
S SPECIFICATIONS AND SERVICE DATA	13
C COMPONENT PARTS	14
1. Heater System	14
2. Heater Unit	15
3. Intake Unit	16
4. Control Unit	17
W SERVICE PROCEDURE	19
1. Heater Unit	19
2. Blower Motor Assembly	19
3. Control Unit	20
4. Mode Door Motor	22
5. Intake Door Motor	23
6. Temperature Control Cable	23

M MECHANISM AND FUNCTION

1. Outline

The heater control unit is located in the middle portion of the instrument panel.
The heater unit is provided with mode doors and an air mix door. The intake unit is provided with an intake door and blower motor. The heater unit and the intake unit are regulated by their control units.

Fresh outside air is introduced into the compartment through the center and side ventilator grilles when the ventilator fan is operated.

Fresh outside air can also be introduced through the side vents on the driver's and passenger's sides by the ram pressure produced while the vehicle is running.

A high performance heater system is adopted. All models are equipped with the front side window defroster and some models are further equipped with the rear heater duct.

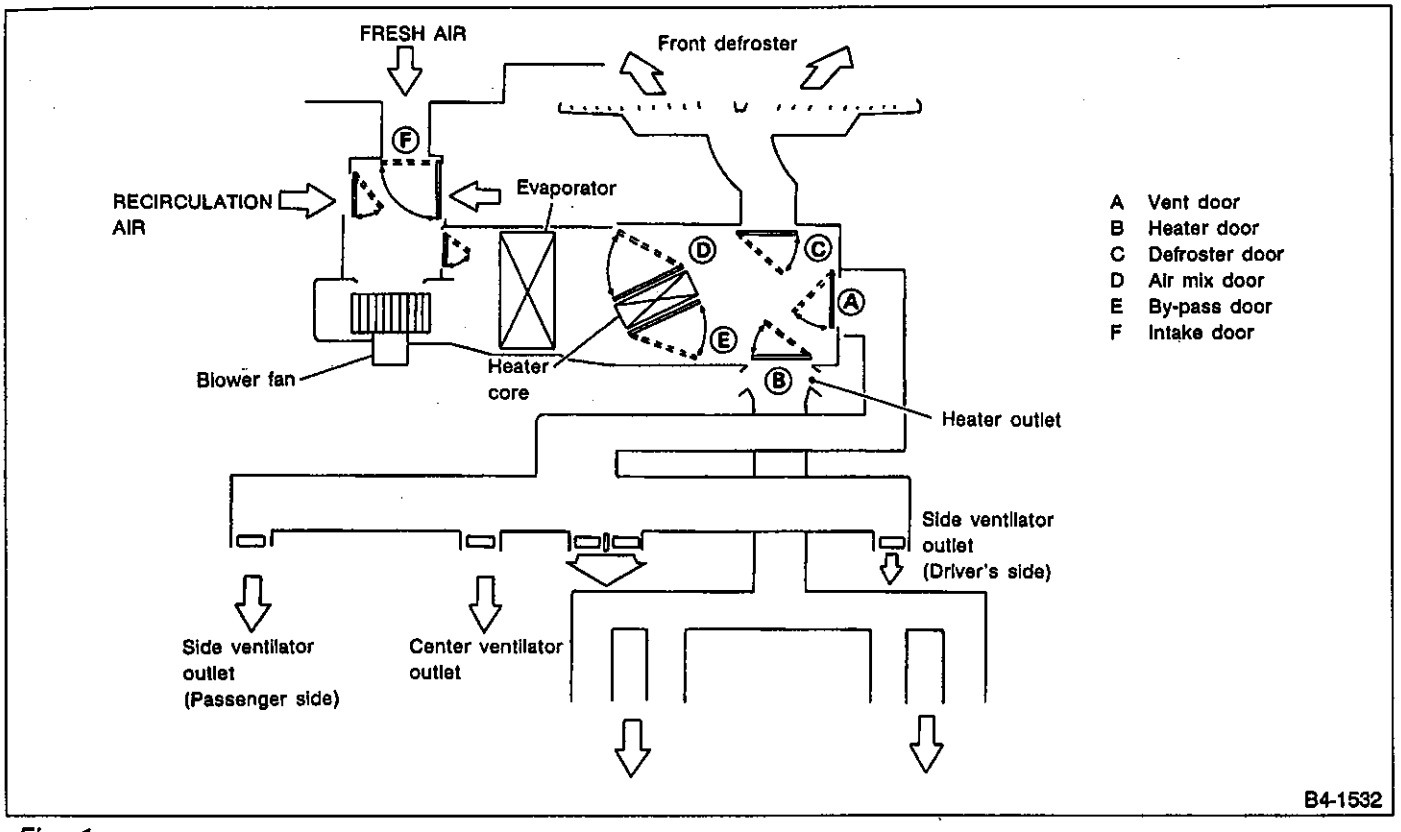

Fig. 1

1. SYSTEM FLOW

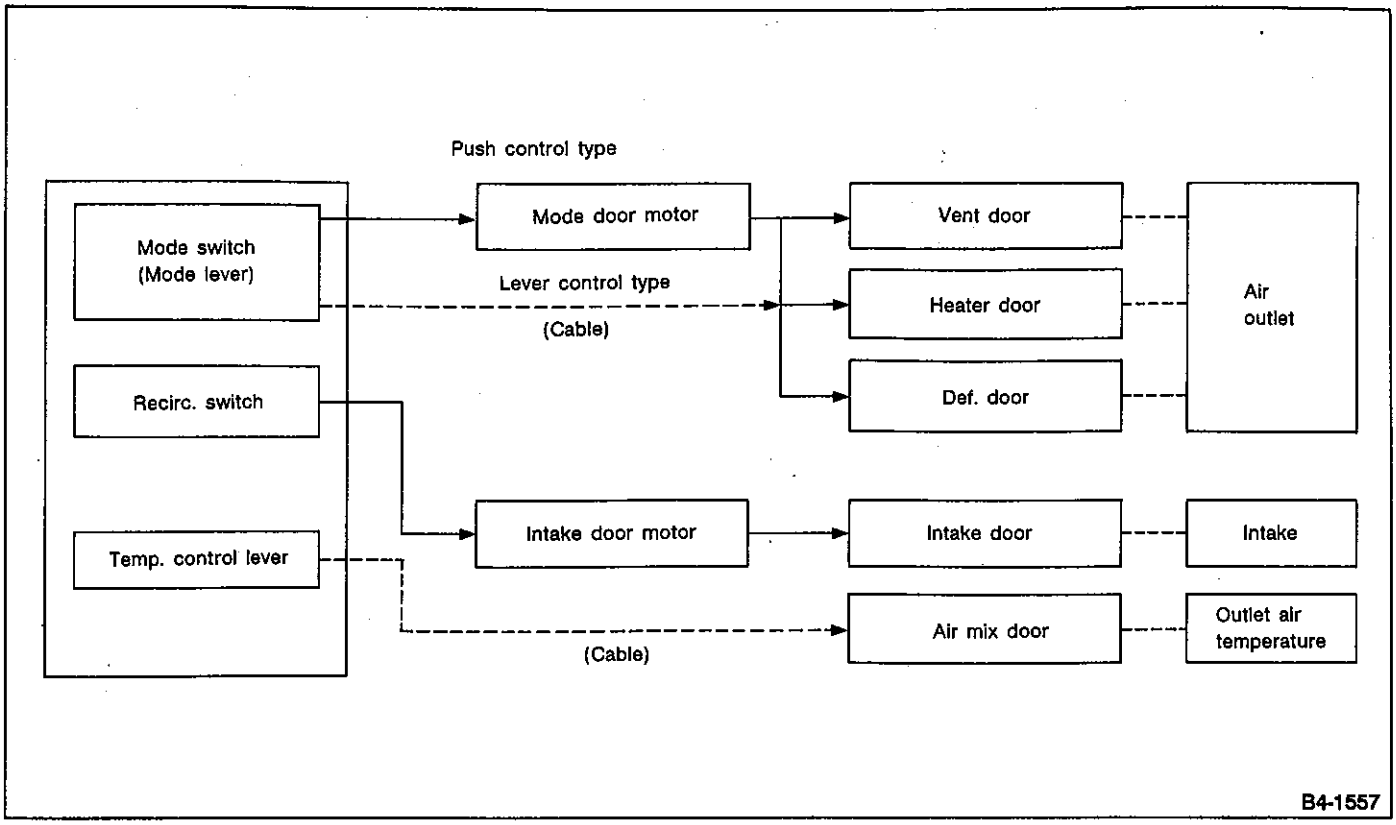

Fig. 2

2. AIR FLOW

Switch position	Air flow	Switch position	Air flow
VENT	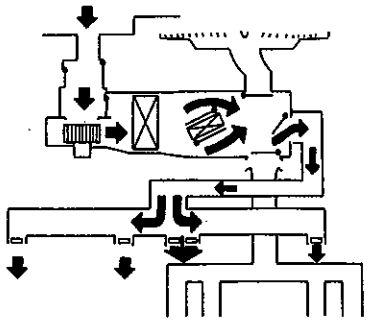	HEAT DEF	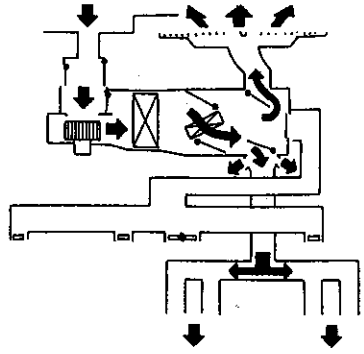
BI-LEV	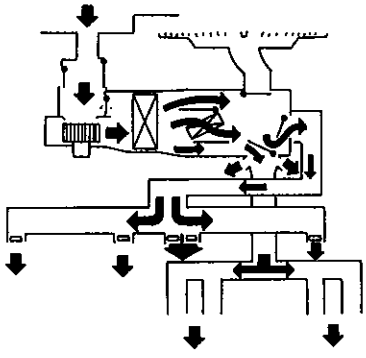	DEF	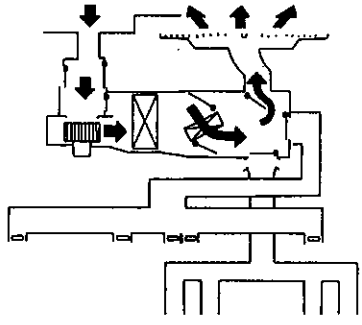
HEAT	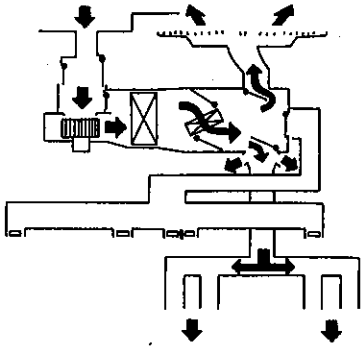	Heater control (Push control type) 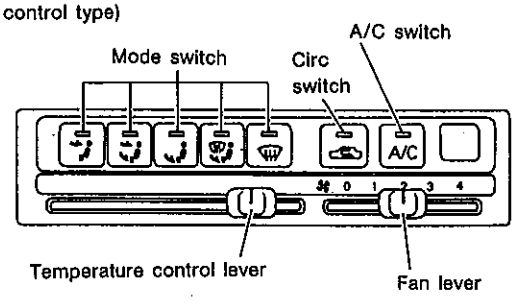	
		Heater control (Lever control type) 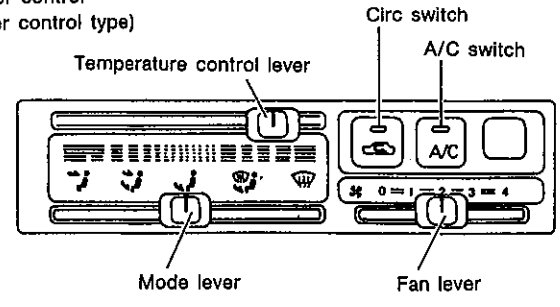	

Fig. 3

B4-1558

3. AIR DISTRIBUTION RATIO

Figure shows air distribution ratios corresponding to mode selector switch or lever positions.

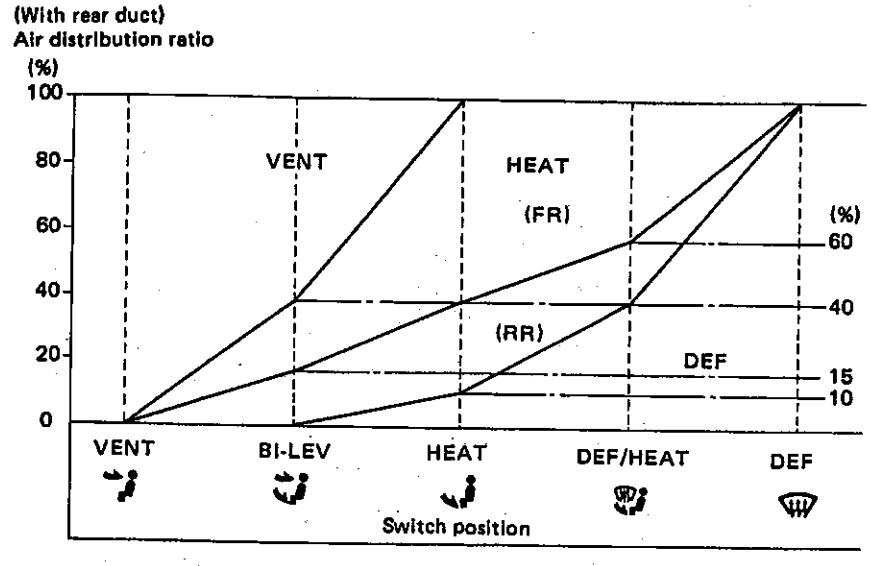

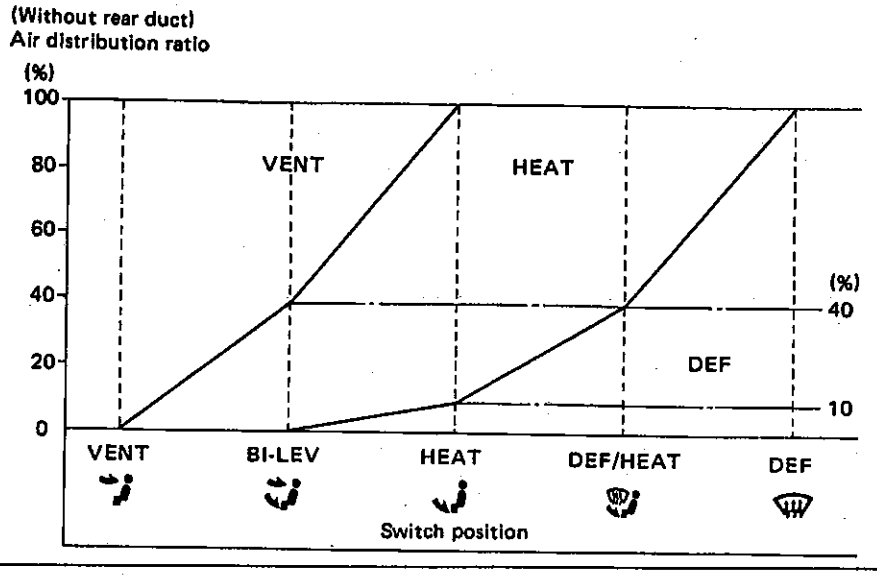

B4-1387

Fig. 4

2. Control Unit

A: SCHEMATIC

1. PUSH CONTROL TYPE

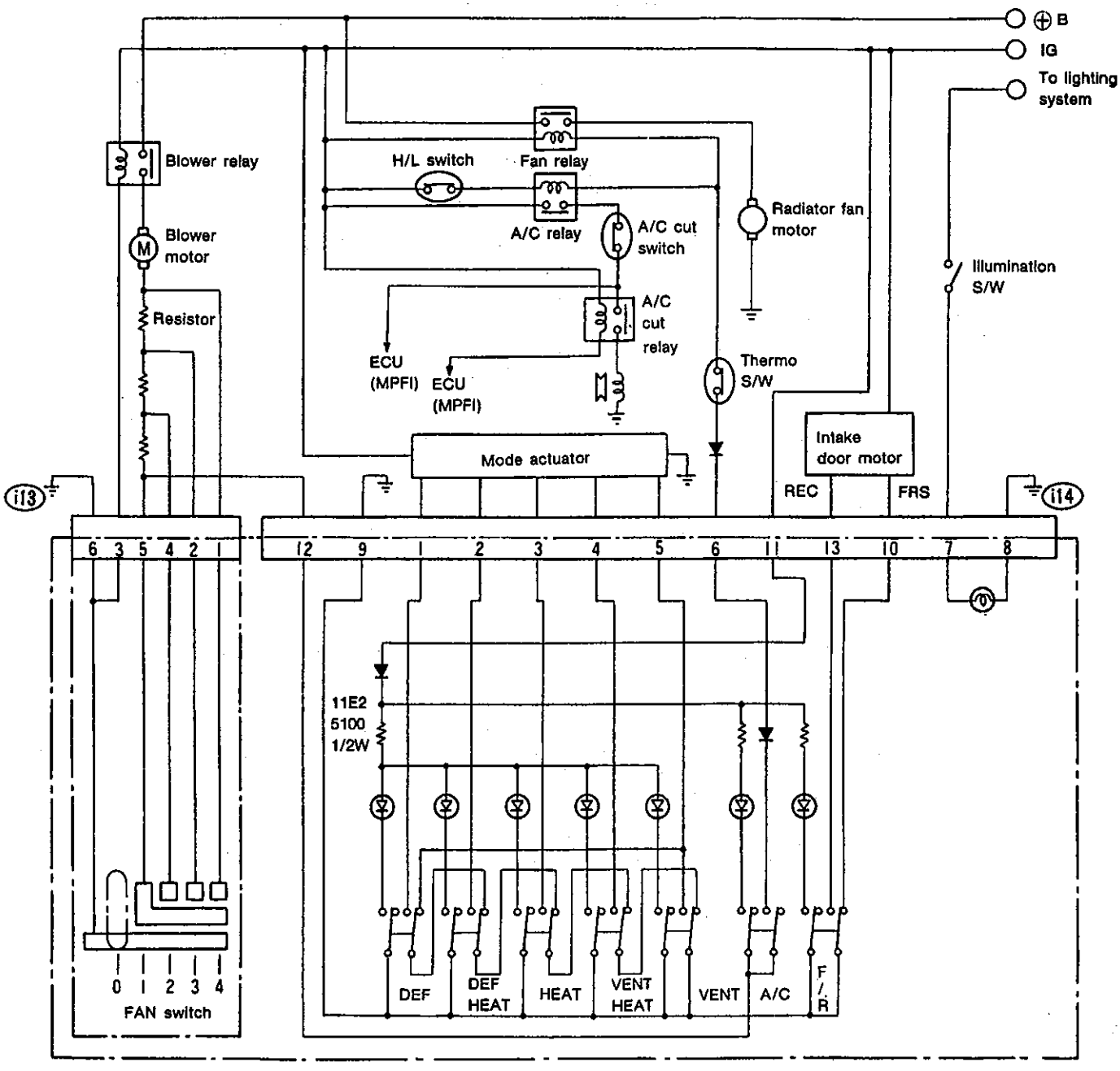

A/C: Air conditioner switch
F/R: Recirc switch

B4-1535

Fig. 5

2. LEVER CONTROL TYPE

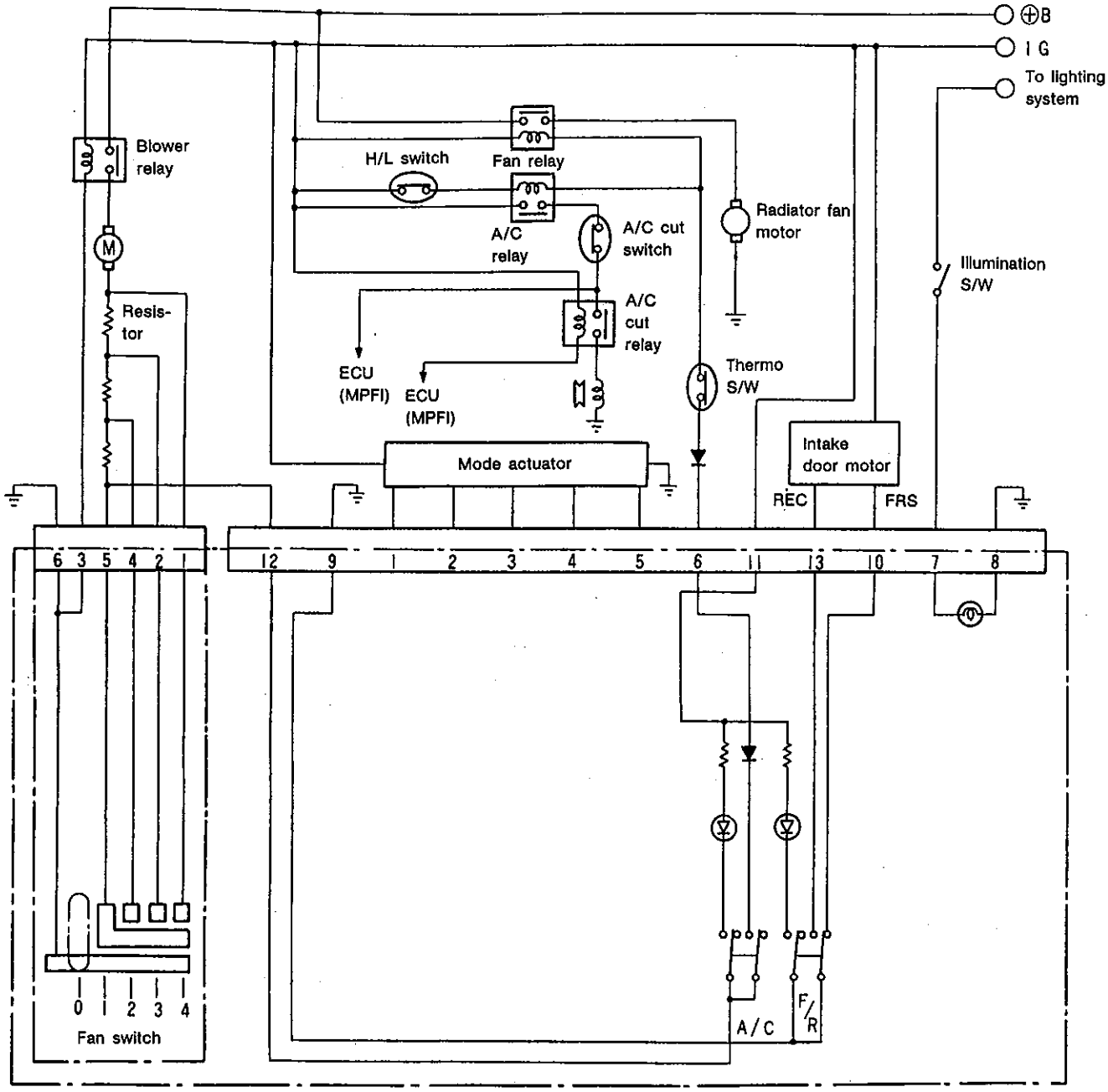

A/C: Air conditioner switch
F/R: Recirc switch

B4-1560

Fig. 6

B: FUNCTION

*: Lever control type differs from push control type in that it is provided with a MODE lever. Functional features for the two types are the same.

PUSH CONTROL TYPE

* MODE SELECTOR SWITCH					
SWITCH POSITION					
AIR OUTLET	VENT	VENT HEAT	HEAT	DEF HEAT	DEF
REMARKS	When Cool Vent Switch is pushed, air comes out of VENT and air outlet selected by mode selector switch at the same time.				

RECIRC SWITCH		
INDICATOR	ON	OFF
INTAKE DOOR POSITION	RECIRC	FRESH

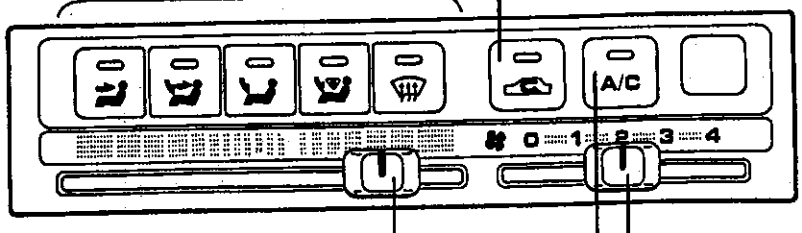

TEMPERATURE CONTROL LEVER
Outlet air temperature is variably controlled from COLD to HOT by air mix door and cable.

FAN SWITCH					
FAN SWITCH POSITION	0	1	2	3	4
FAN OPERATION	OFF	ON			
REMARKS		Fan speed is controlled from 1st to 4th speed.			

A/C SWITCH		
INDICATOR	* ON	OFF
COMPRESSOR	ON	OFF
REMARKS	*: When fan switch is pushed, indicator lights and compressor turns on.	

Compressor may be turned off by thermo control even though A/C switch indicator is lighted.

B4-1536

Fig. 7

3. Mode Door Control

A: GENERAL

The mode door motor is located on the right side of the heater unit.

It opens and closes the vent, heater and defroster doors through side links.

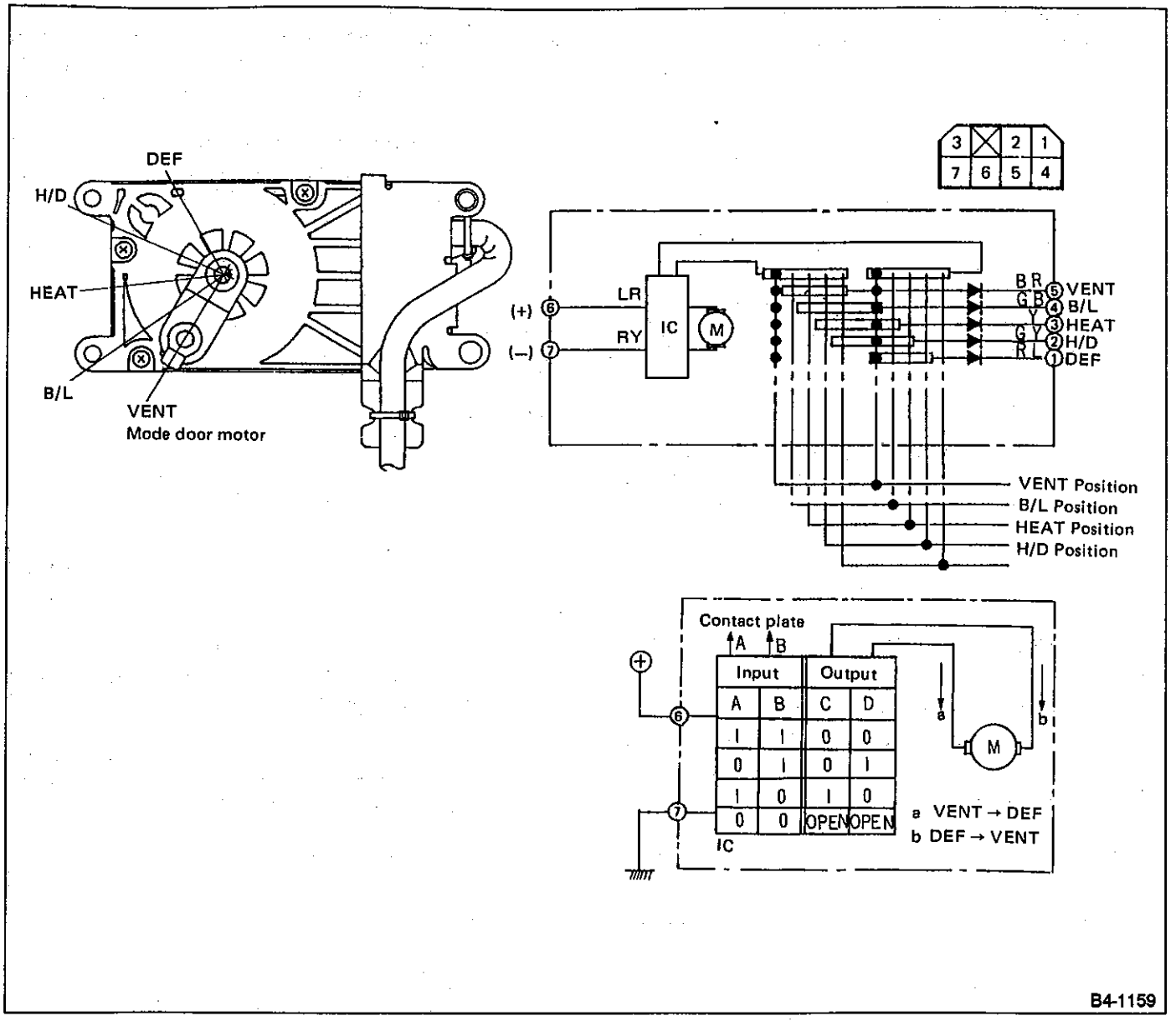

Fig. 8

B: OPERATION

1. DRIVE CIRCUIT

The drive circuit rotates the servo motor in the standard or reverse direction, according to the input of contact plates A or B built into the motor.

2. SWITCHING FROM THE VENT TO THE DEF MODE

When the DEF switch is turned to "ON", current flows from movable contact A to contact plate A so that input A is grounded (current = 0). At this point, input B is not grounded (current = 1).
As a result, output from the drive circuit is "0" in relation to "C" (grounded) and "1" in relation to "D". Current ① flows so that the damper moves from the VENT to the DEF mode.
After the servo motor has rotated, the movable contact plate A moves away from contact plate C. This stops the motor setting the system in the DEF mode.

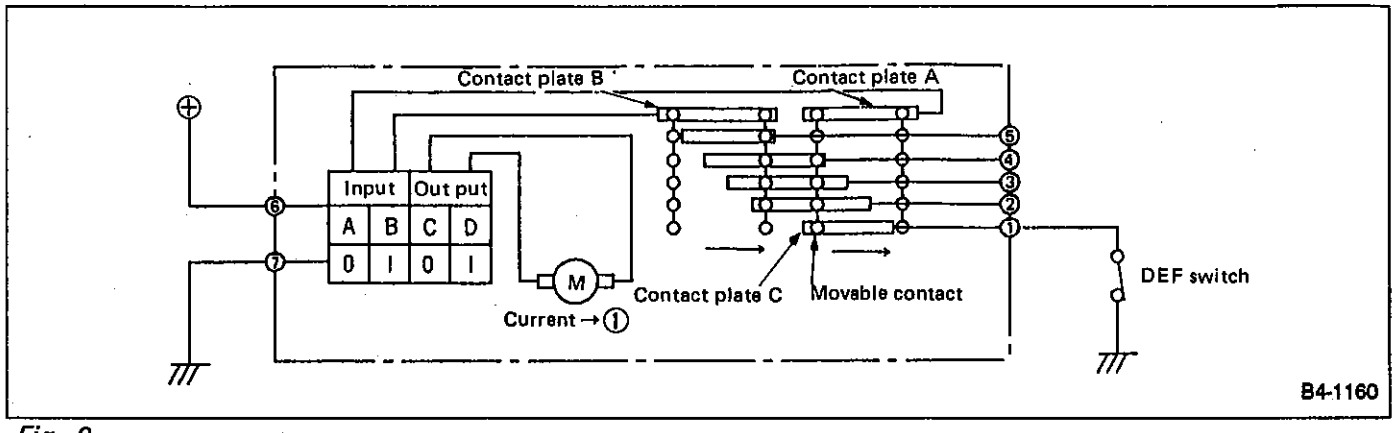

Fig. 9

3. SWITCHING FROM THE DEF TO THE VENT MODE

When the VENT switch is turned to "ON", current flows from movable contact B to contact plate B so that input B is grounded (current = 0). At this point, input A is not grounded (current = 1).

As a result, output from the drive circuit is "1" in relation to "C" and "0" in relation to "D". Current ② flows so that the damper moves from the DEF to the VENT mode.
After the servo motor has rotated the movable contact plate B moves away from contact plate C. This stops the motor setting the system in the VENT mode.

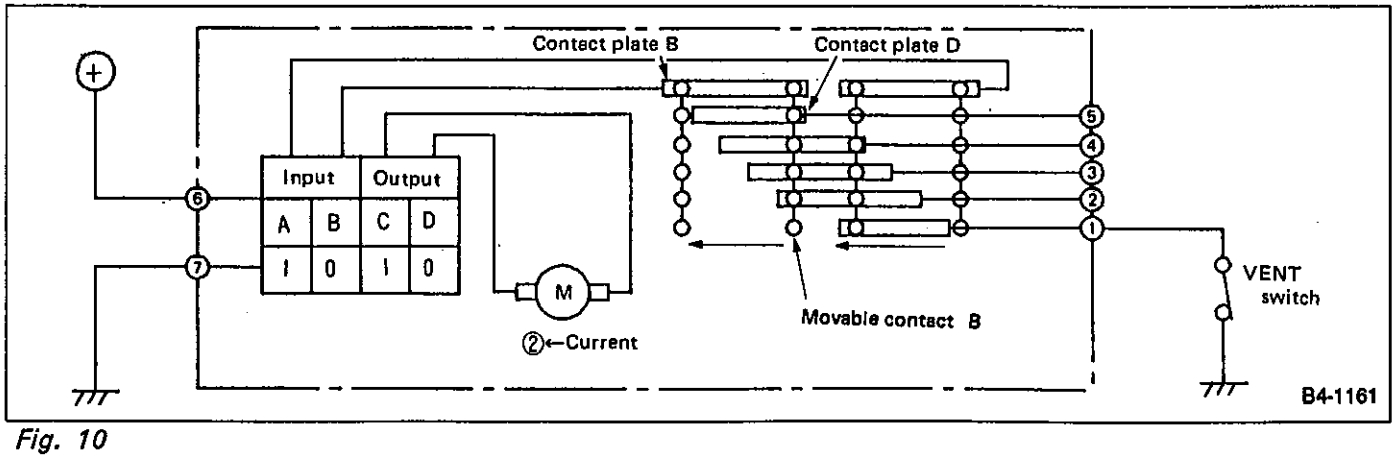

Fig. 10

4. Intake Door Control

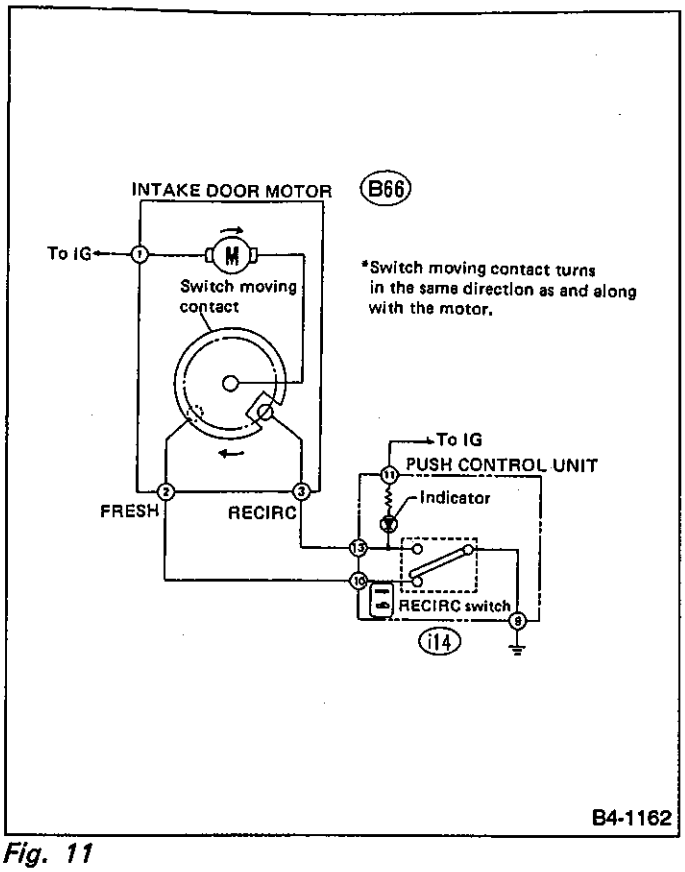

Fig. 11

Intake door motor is located on the upper part of the intake unit. It opens and closes the intake door with a rod and a link. When the RECIRC switch is set to ON (the RECIRC indicator lights), the ground line of the intake door motor is switched to terminal 2 from terminal 1. And the motor starts to rotate because the position switch contacts built into it are set to the current flow position. The contacts turn along with the motor. When they reach the non-contacts flow position, the motor will stop. The motor always turns in the same direction. When the RECIRC switch is set to OFF (the RECIRC indicator does not light), follow the same operation.

5. Blower System

Operation of the blower relay is controlled by turning ON and OFF the ignition switch. When the ignition switch is ON and the fan switch is operated from 1st to 4th speed, electric current from the battery goes through the blower motor, the resistor, the fan switch and ground. The resistor is switched by the position of the fan switch, and controls the blower motor speed from 1st to 4th.

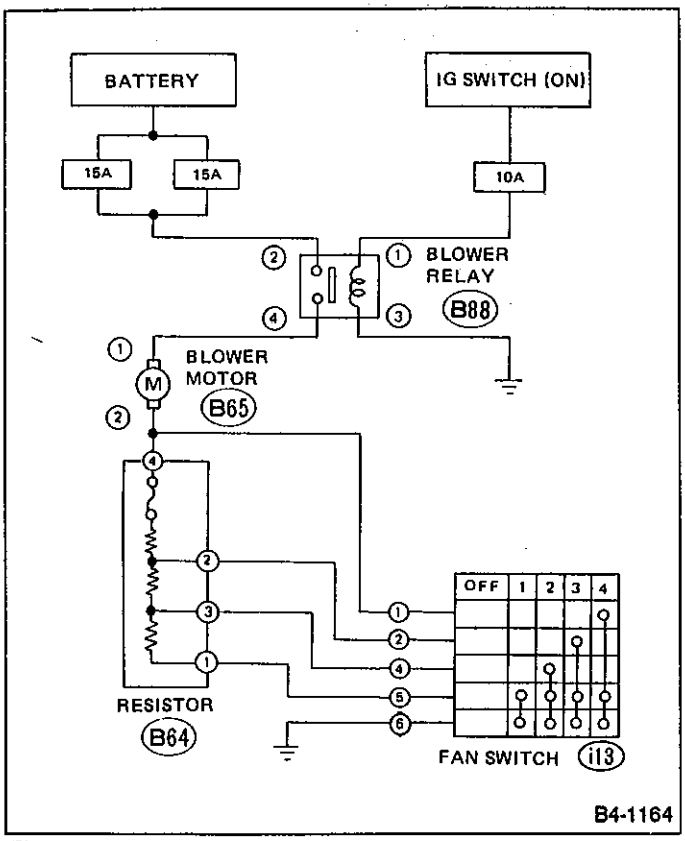

Fig. 12

S SPECIFICATIONS AND SERVICE DATA

A: SPECIFICATIONS

Item		Specifications	Condition
Heating capacity		4.885 kW (4,200 kcal/h, 16,666 BTU/h)	• Mode selector switch : HEAT
			• Temp. control lever : Full hot
			• Temperature difference between hot water and inlet air : 65°C (149°F)
			• Hot water flow rate : 360 ℓ/h (95.1 US gal/h, 79.2 Imp gal/h)
Air flow rate		300 m^3/h (10,593 cu ft/h)	• Mode selector switch: HEAT
Max air flow rate		480 m^3/h (16,949 cu ft/h)	• Temperature control lever : Full cold
			• Blower fan speed : 4th position
			• Mode selector switch : VENT
Heater core size (height x length x width x thickness)		159.5 x 180 x 32 mm (6.28 x 7.09 x 1.26 in)	—
Blower motor	Type	Magnet motor 220 W or less	at 12.5 V
	Fan type & Size (diameter x width)	Sirocco fan type 140 x 65 mm (5.51 x 2.56 in)	—

C COMPONENT PARTS

1. Heater System

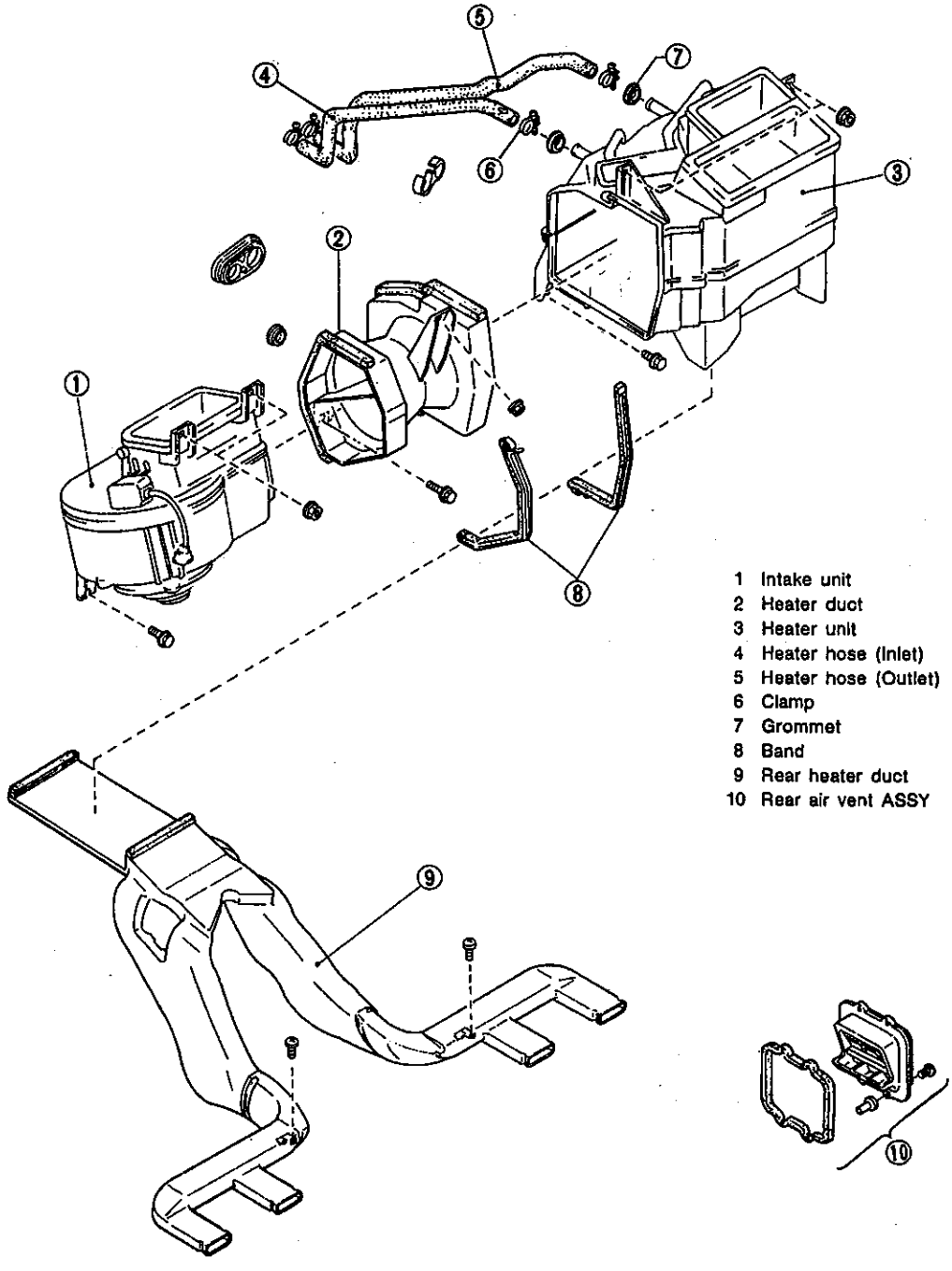

Fig. 13

2. Heater Unit

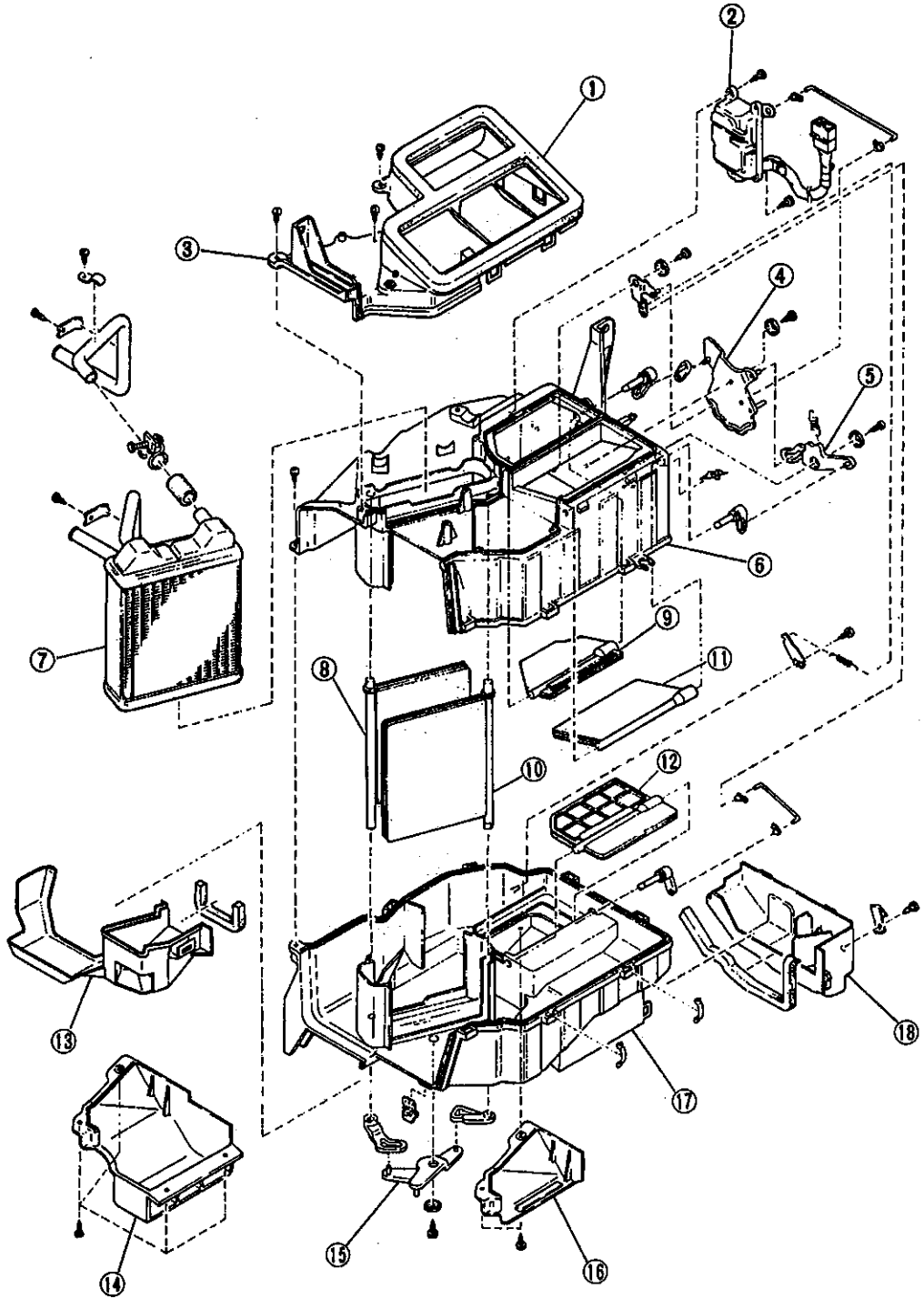

Fig. 14

3. Intake Unit

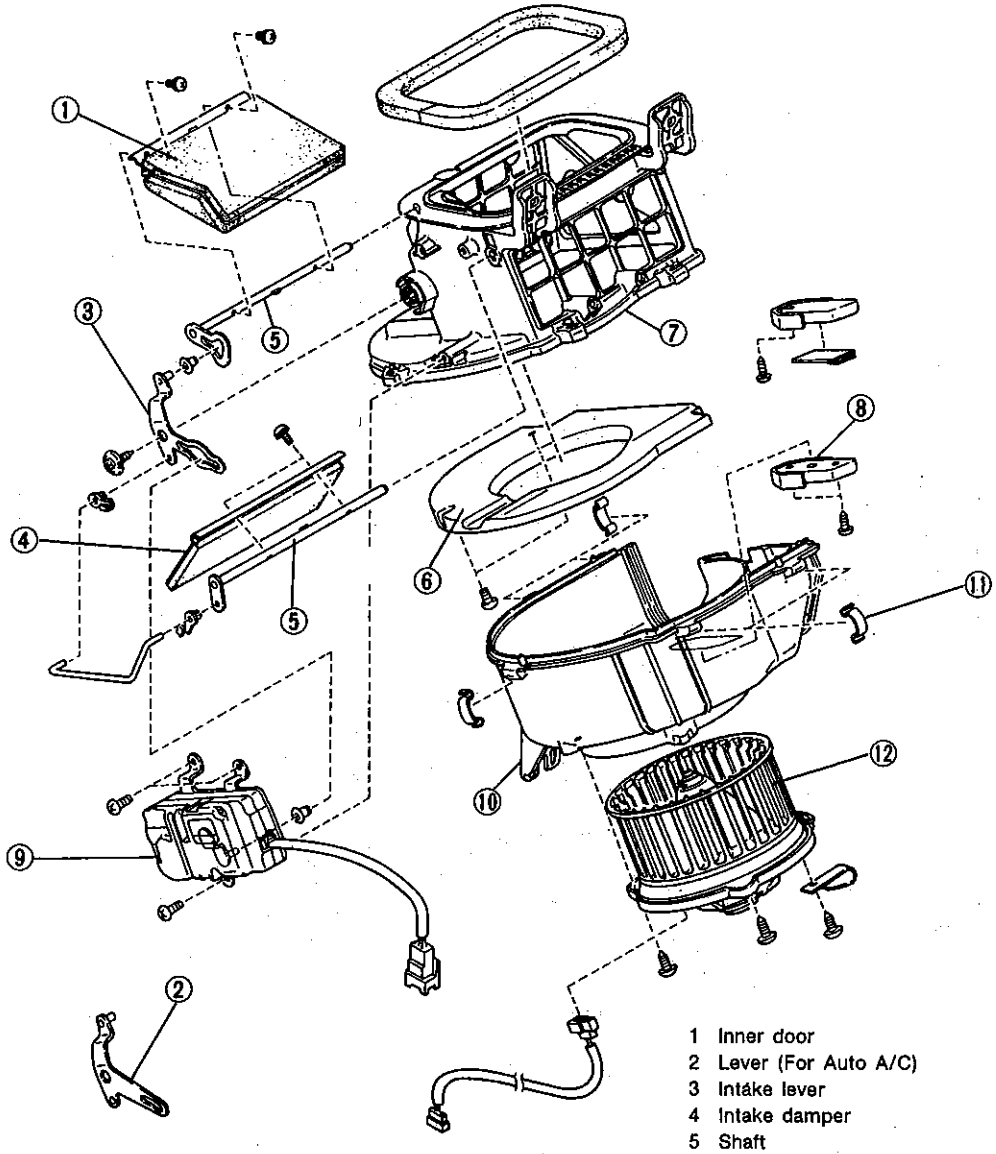

1 Inner door
2 Lever (For Auto A/C)
3 Intake lever
4 Intake damper
5 Shaft
6 Plate
7 Upper case
8 Resistor
9 Intake door motor
10 Lower case
11 Clip
12 Blower motor and fan

B4-1564

Fig. 15

4. Control Unit

1. PUSH CONTROL TYPE

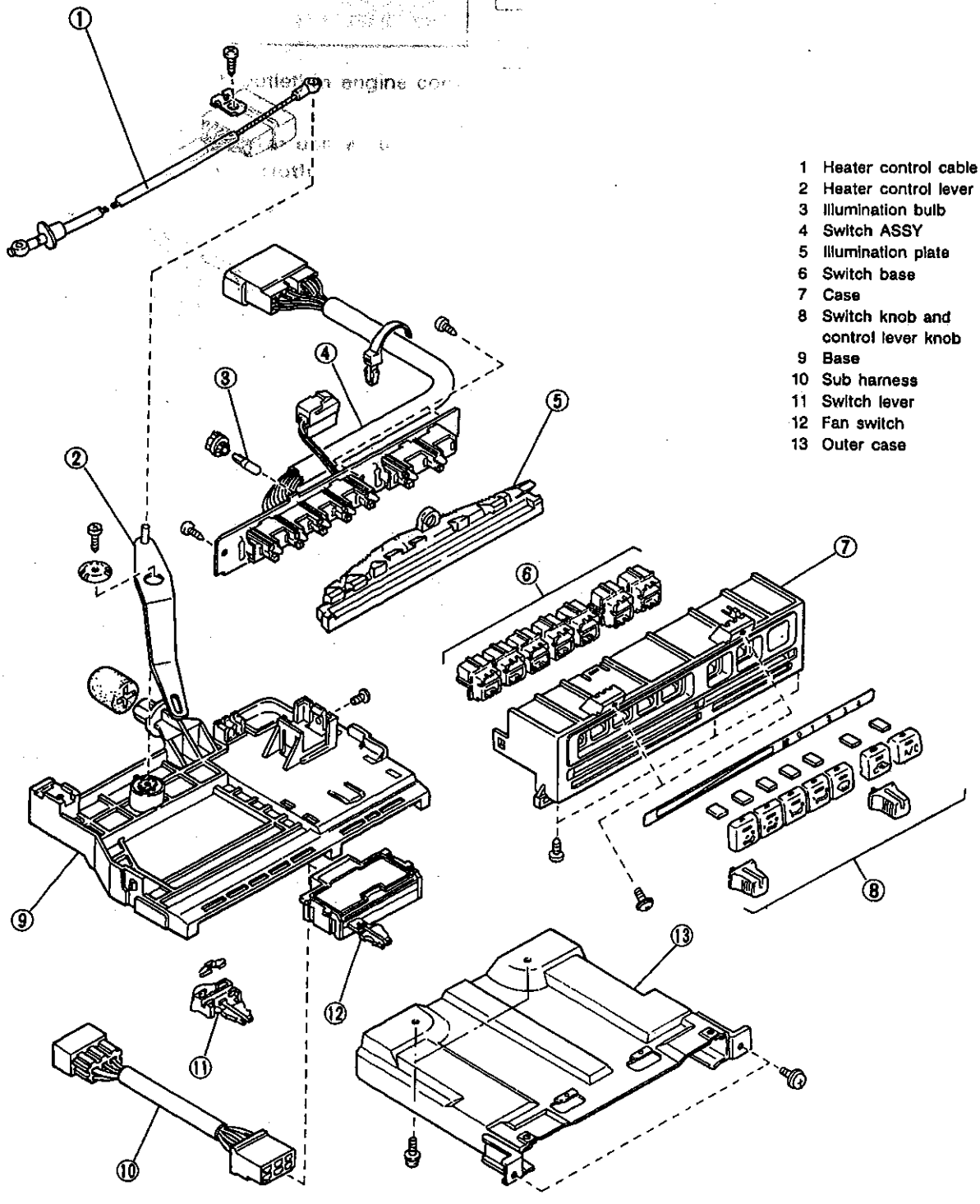

Fig. 16

2. LEVER CONTROL TYPE

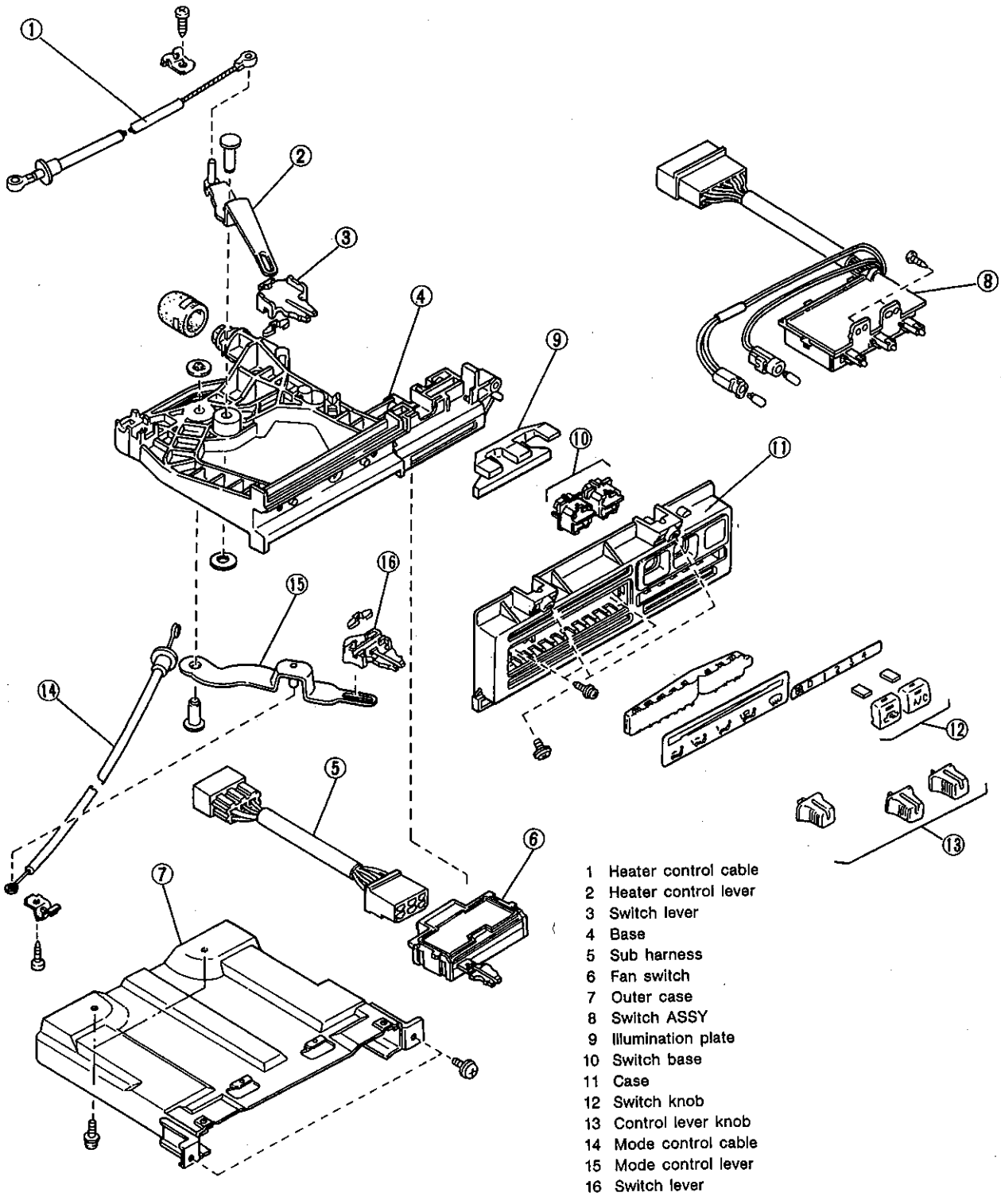

Fig. 17

W SERVICE PROCEDURE

1. Heater Unit

A: REMOVAL

1) Remove heater hoses (inlet, outlet) in engine compartment.

Drain as much coolant from heater unit as possible, and plug disconnected hose with cloth.

2) Disconnect temperature control cable and door motor joint connectors (mode, intake) from heater unit and intake unit.
3) Remove instrument panel and console box.
⟨Refer to 5-4.⟩
4) Remove cooling unit ASSY.
⟨Refer to 4-7.⟩
5) Remove heater duct.
6) Remove heater unit.

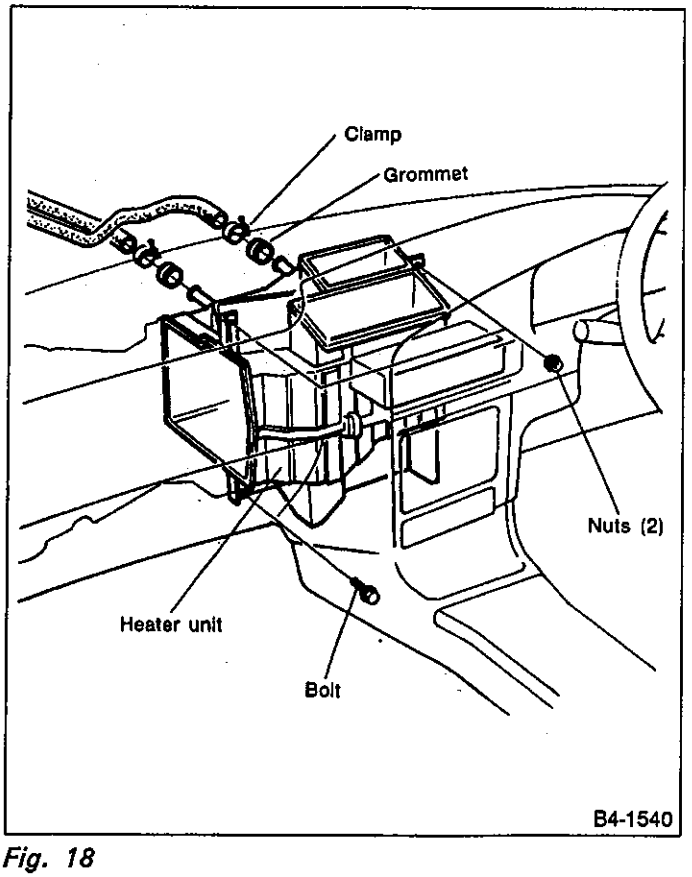

Fig. 18

B: INSTALLATION

Installation is in the reverse order of removal.

Fitted length of heater hose over pipe:
20 — 25 mm (0.79 — 0.98 in)

Heater unit mounting bolt tightening torque:
5.4 — 9.3 N•m (0.55 — 0.95 kg-m, 4.0 — 6.9 ft-lb)

2. Blower Motor Assembly

A: REMOVAL

1) Remove glove box and stay.
2) Remove heater duct. (or cooling unit for A/C equipped vehicles.)
3) Disconnect intake door motor harness connector.
4) Disconnect blower motor harness connector.

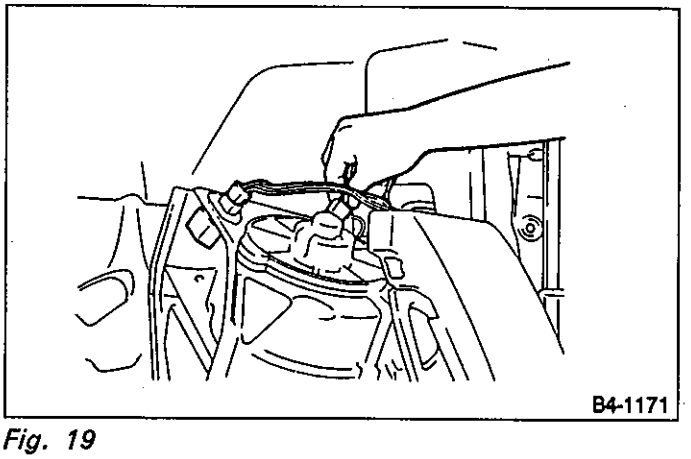

Fig. 19

5) Remove blower motor mounting bolts and nuts.
6) Remove blower motor assembly.

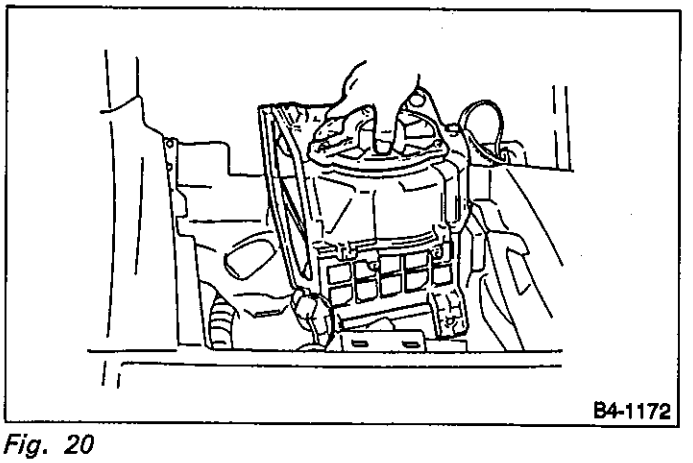

Fig. 20

3. Control Unit

A: REMOVAL

1) Remove temperature control cable from heater unit.
2) Remove visor A.
(Refer to chapter "INSTRUMENT PANEL".)
3) Disconnect push control unit harness connectors.
4) Remove push control unit assembly.

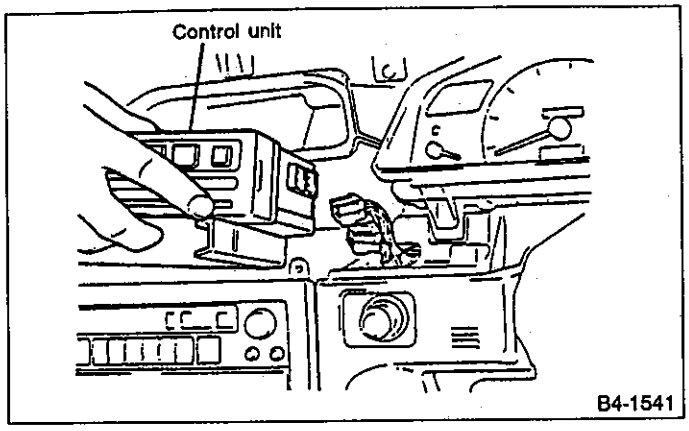

Fig. 21

B: DISASSEMBLY

1) Remove the two control knobs.
2) Remove the switch knobs.

While pushing the switch knob locking retainer with a pointed pin driver, remove switch knob in the direction of the arrow.

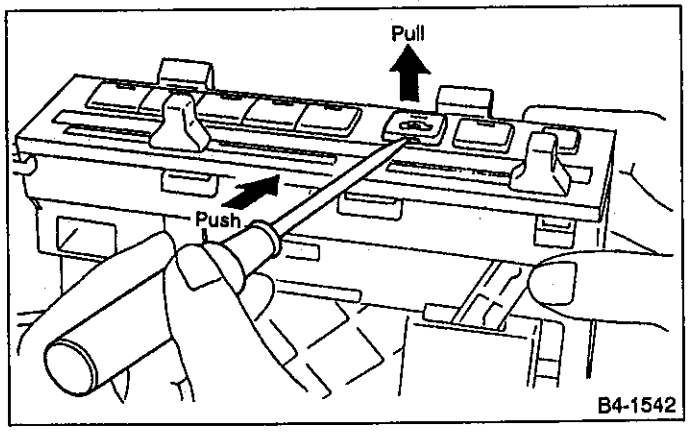

Fig. 22

3) Disconnect push control sub harness connector.
4) Remove control base.

Unfasten locks on each side of control base in the direction of the arrow, and remove control base from control box.

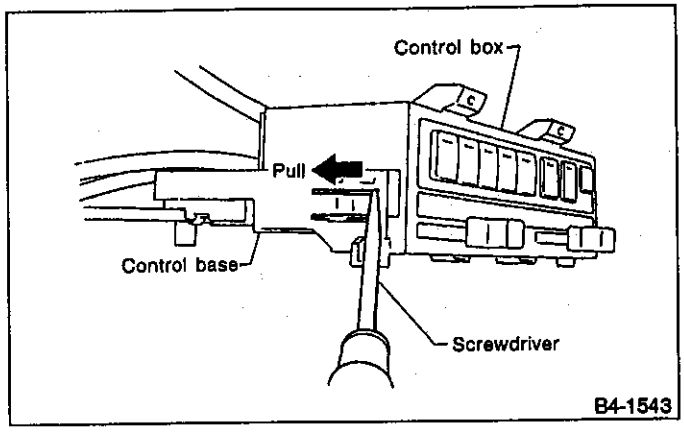

Fig. 23

5) Remove fan switch.

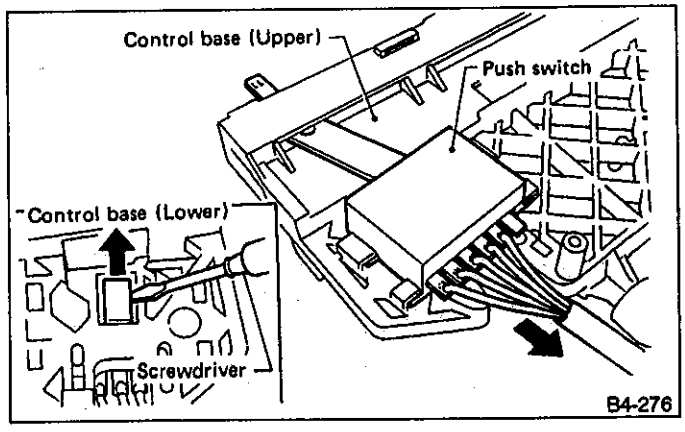

Fig. 24

6) Remove temperature control cable and lever.
7) Remove illumination bulbs.

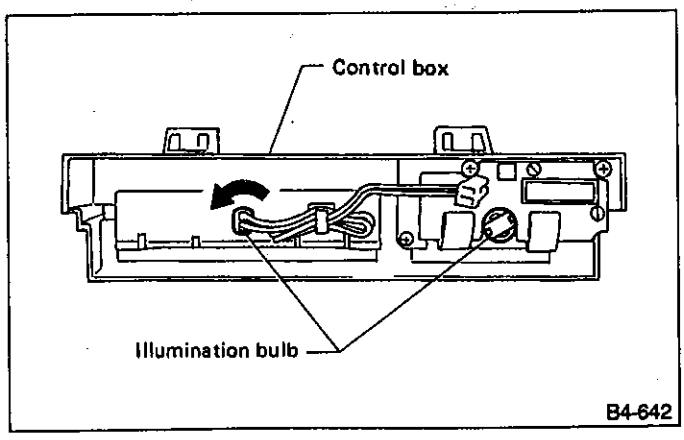

Fig. 25

C: INSPECTION

1. FAN SWITCH

Check continuity between terminals at each switch position.

Switch position \ Terminal No.	1	2	4	5	3	6
OFF					○	○
1				○	○	○
2			○	○	○	○
3		○		○	○	○
4	○			○	○	○

2. CONTROL UNIT

1) Ignition switch is turned OFF.
2) Disconnect connector from control unit.
3) Check circuit continuity between each terminal, when push control switch (mode, recirc switch) is turned ON.

Terminal	Mode selector switch *2						RECIRC switch		A/C switch	L.E.D.		
	VENT	VENT HEAT	HEAT	HEAT DEF	DEF	OFF (switch canceled)	RECIRC	FRESH	ON	Mode selector switch *1	RECIRC switch *1	A/C switch
①					○							
②				○								
③			○									
④		○										
⑤	○					○						
⑥									○			
⑦									●			
⑧												
⑨	○	○	○	○	○	○	○	○	○	○	○	○
⑩								○		●	●	●
⑪										○	○	○
⑫												
⑬							○					

*1 Each switch (mode and recirc) is turned ON.
*2 Used only push control type.

D: ADJUSTMENT

1) Operate temperature control lever to "FULL COLD."
2) Install control cable to lever. While pulling outer cable, secure control cable with a clamp.

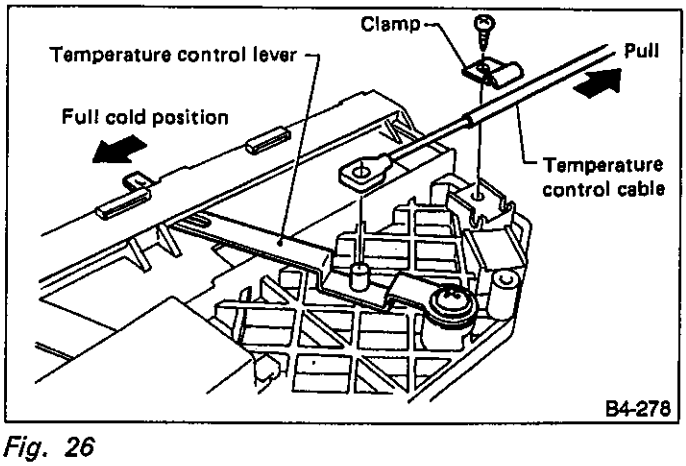

Fig. 26

E: ASSEMBLY

Assembly is in the reverse order of disassembly.

F: INSTALLATION

Installation is in the reverse order of removal.
(Refer to 4-6 [W6A0].)

4. Mode Door Motor

A: REMOVAL

1) Remove lower cover from instrument panel.
2) Disconnect mode door motor harness connector.
3) Remove screws which secure mode door motor to heater unit.
4) Using a screwdriver, remove rod holder.
5) While rotating mode door motor, remove it from rod holder.

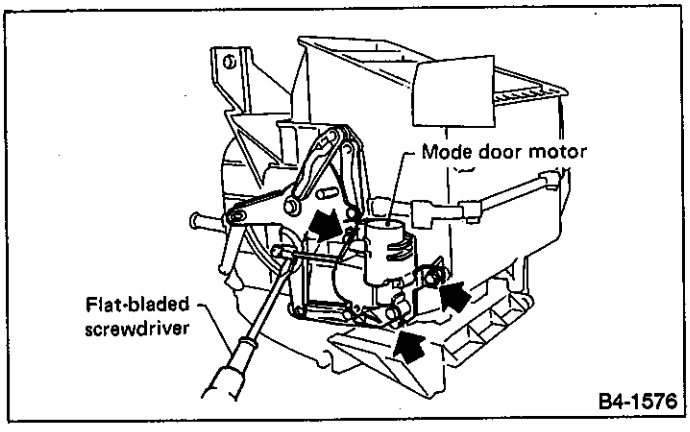

Fig. 27

Ensure mode select or switch is set to "VENT" (to set side link in the vent position) when removing mode door motor.

B: INSPECTION

1) Check the mode door motor operation. When approx. 12V is applied to the mode door motor terminals, mode door motor operates as follows.

	Terminal No.							Mode door motor position
	1	2	3	4	5	6	7	
Polarity of power supply					(−)	(+)	(−)	VENT
				(−)		(+)	(−)	BILEV
			(−)			(+)	(−)	HEAT
		(−)				(+)	(−)	HEAT/ DEF
	(−)					(+)	(−)	DEF

C: INSTALLATION

1) Connect mode door motor to harness connector.
2) Turn ignition switch to "ACC" and set mode select or switch to "VENT".

Ensure that mode door motor is set in the vent mode.

3) Install mode door motor on heater unit.
4) Manually operate side link to the vent mode position, and secure rod to rod holder.
5) Set mode selector switch to "DEF", and ensure that side link moves over its full stroke range.

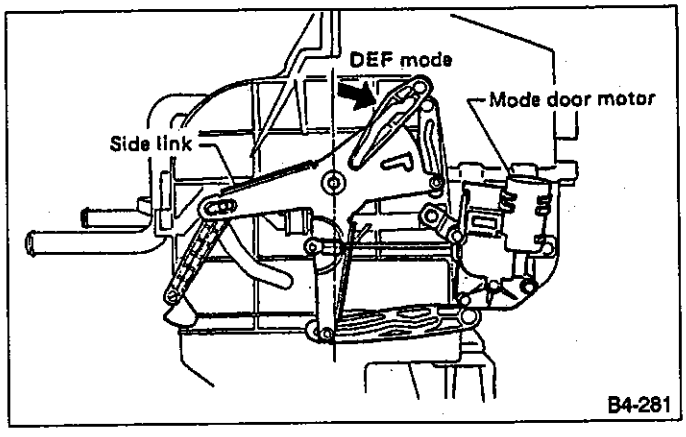

Fig. 28

5. Intake Door Motor

A: REMOVAL

1) Remove glove box.
2) Remove side cover from instrument panel.
3) Remove intake unit ASSY from the vehicle.
4) Remove screws which secure intake door motor to intake unit ASSY.

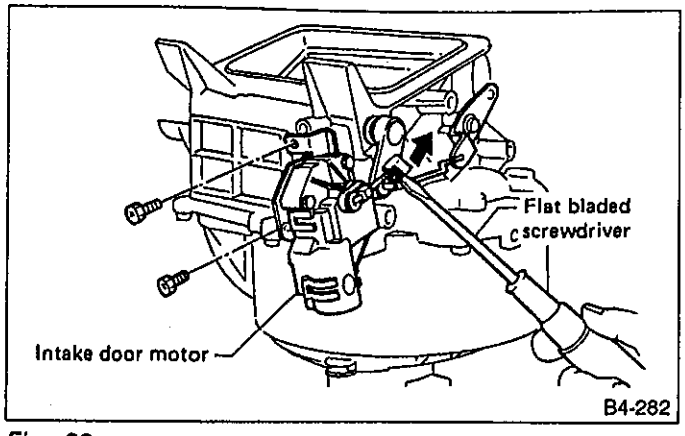

Fig. 29

5) Remove intake door motor and harness as a unit.
6) Disconnect harness from intake motor.

Ensure that RECIRC switch is set to "ON".

B: INSPECTION

When approx. 12V is applied to the intake door motor terminals, intake door motor operates as follows.

Intake door motor position	Terminal		Intake door motor operation
	⊕	⊖	
Fresh	①	③	Door motor moved to Recirc position
Recirc		②	Door motor moved to Fresh position

C: INSTALLATION

1) Connect harness to intake door motor.
2) Turn ignition switch to "ACC" and set RECIRC switch to"ON" switch to "RECIRC".

Ensure that intake door motor is set in the "RECIRC" mode.

3) Install intake door motor on intake unit.
4) Secure rod holder to link, and install link to intake unit ASSY.
5) Manually set rod in the "RECIRC" mode, and secure to rod holder.
6) Operate mode selector switch to ensure that system changes from intake air to "RECIRC" and from "RECIRC" to intake air in full-stroke range.

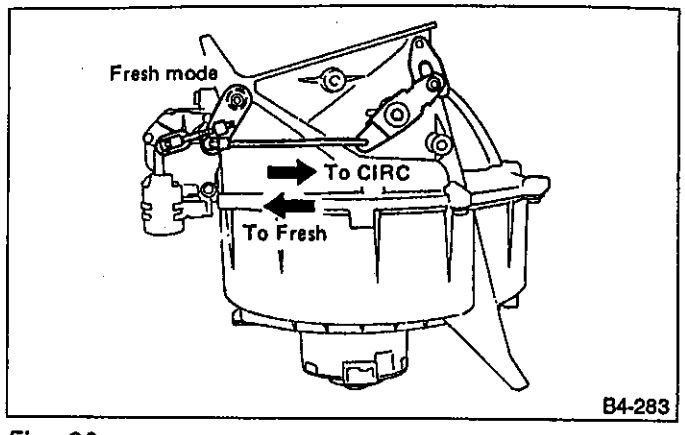

Fig. 30

6. Temperature Control Cable

A: ADJUSTMENT

1) Operate temperature control lever to "FULL COLD".
2) Connect control cable to air mix door link.
3) While pushing outer cable in the direction of the arrow, secure control cable to clamp.

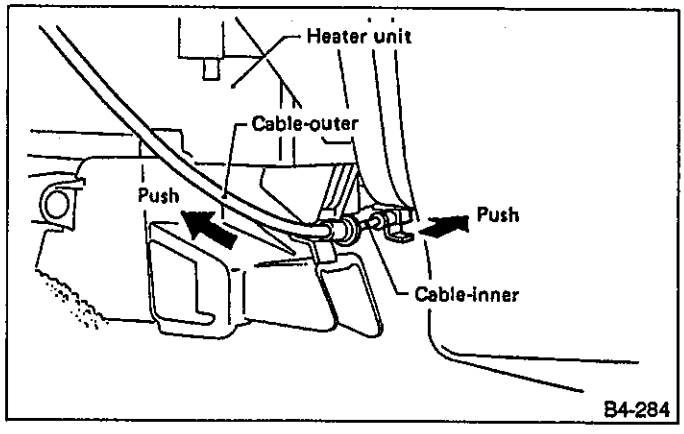

Fig. 31

4) Operate temperature control lever to ensure that it and air mix door link complete their full stroke ranges. (Refer to 4-6.)